Clarke®

EX40 16ST, EX40 18LX

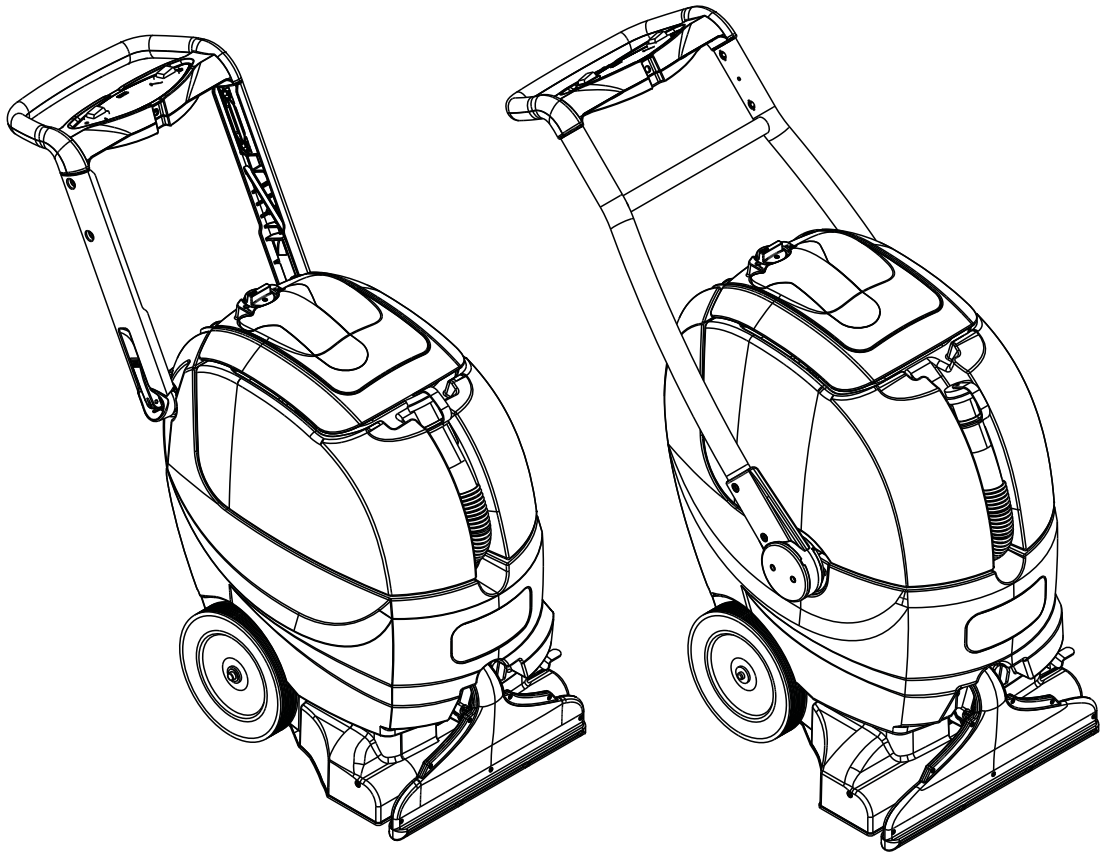

Parts List

Models: 56265504 (EX40 16ST), 56265505 (EX40 18LX)

Form No. 56042643 7/2015 REV A

Clarke®

TABLE OF CONTENTS

DESCRIPTION	PAGE
Base System	2-3
Brush System	4-5
Decal System	6-7
Handle System 16ST	8-9
Handle System 18LX	10-11
Recovery System	12-13
Solution System 16ST-1	14-15
Solution System 16ST-2	16-17
Solution System 18LX-1	18-19
Solution System 18LX-2	20-21
Ladder Diagrams	22-25
Options & Accessories	26
Brush Selector Guide	27

WHEN ORDERING PARTS

* Use the part numbers from the “Ref. No.” columns in this parts list.
* Specify the model and serial number of the machine.
* Use the space below to record the model and serial number for future reference.

Model _____ Serial No. _____

BASE SYSTEM

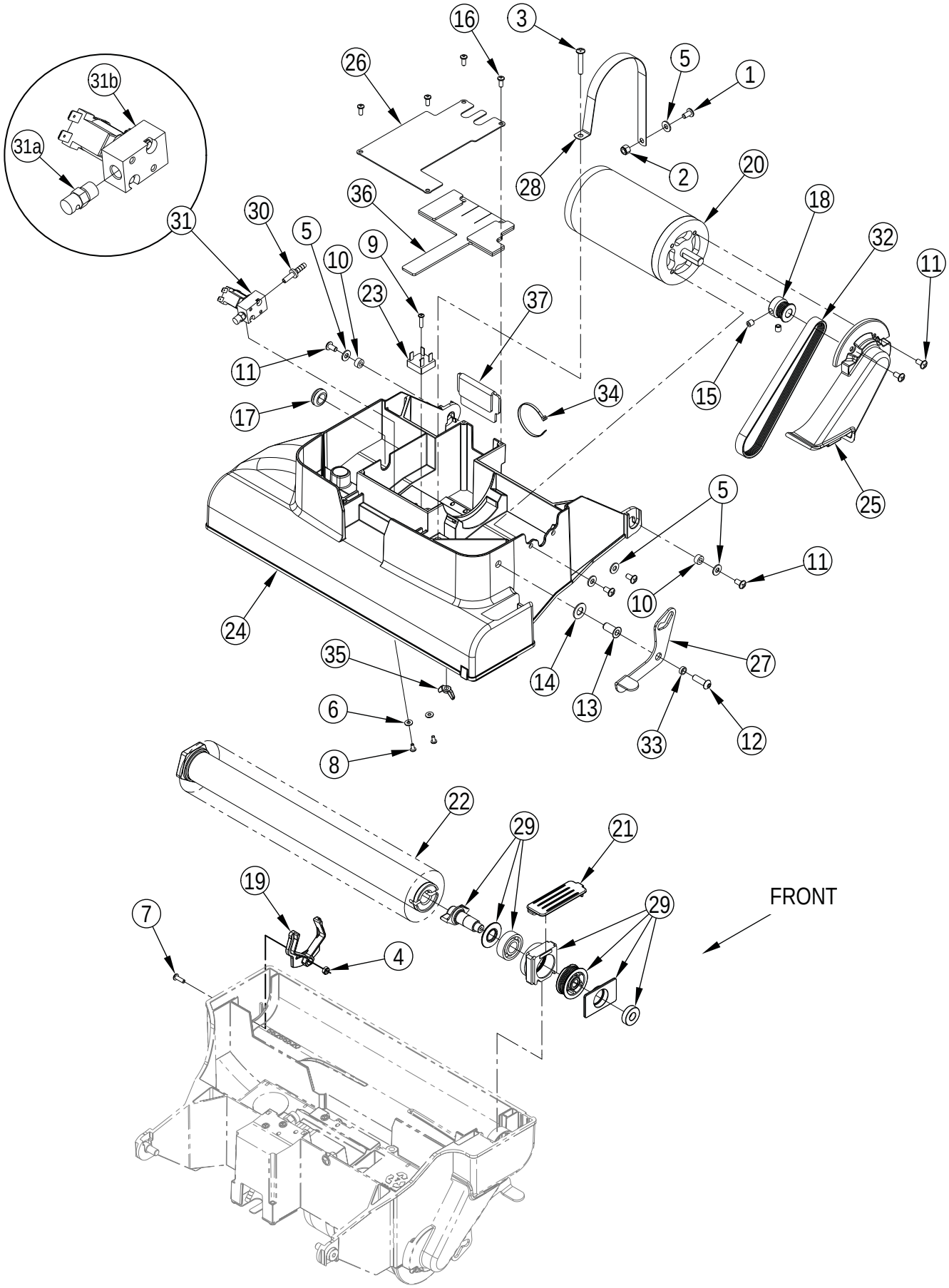
16
3
26
5
1
31b
31a
28
2
20
36
18
30
31
5
9
32
10
11
23
37
11
34
15
17
25
5
11
10
24
27
35
14
13
6
33
12
8
22
29
21
19
29
FRONT
7
4

BASE SYSTEM

Item	Ref. No.	Qty	Description
1	56002145	1	Scr-Pan Phil 1/4-20 X .50
2	56002491	1	Nut-Hex Nyl Loc Ss 1/4-20
3	56002905	1	Scr-Pan Phil Ss 1/4-20 X 1.50
4	56002849	1	Nut, Hex Nyl Loc-Thin Ss 10-24
5	56002859	5	Wsh-Flt Sae Ss 1/4
6	56002875	2	Wsh-Flt Sae Ss #8
7	56002896	1	Scr-Pan Phil Ss 10-24 X .62
8	56003018	2	Scr-Pan Phil Ss 8-32 X .38
9	56003545	1	Scr, Pan Phil Plastite 8-10 X .75
10	56265782	2	Bushing-.26x.50x .25 Long
11	56003897	6	Scr-Pan Phil Loc Ss 1/4-20 X .50
12	56003963	1	Scr-Botton Soc Ss 5/16-18x1.00
13	56003985	1	Rivet-Nut 5/16-18 Steel Zinc P
14	56009037	1	Wsh, Int Shprf 7/16
15	56009131	2	Scr, Soc Set Loc 5/16-18 X .31
16	56009191	4	Scr, Pan Phil Plastite 10-14 X .50
17	56157376	1	Grommet
18	56262558	1	Sheave,Poly-V
19	56265043	1	Clip, Brush Retainer
20	56265075	1	Motor, 115 Vdc, 1/3 Hp M3
21	56265091	1	Cover, Pulley
22	56265044	1	Brush Assembly 16
	56265046	1	Brush, 16
	56265099	1	Brush Assembly 18
	56265065	1	Brush, 18
23	56265103	1	Rectifier, 35 Amp D1
24	56265620	1	Base Extractor 16 (16ST)
	56265520	1	Base-Extractor 18 (18LX)
25	56265629	1	Cover-Belt
26	56265657	1	Cover-Electrical
27	56265663	1	Lever-Brush Storage
28	56265676	1	Strap-Motor
29	56265690	1	Bearing-Spindle Kit
		1	Bearing, Ball
		1	Washer,Bearing
		1	Bearing,Block
		1	Spindle,Drive
		1	Bearing Block-Drive
		1	Sheave-Poly-V-6j17
		1	Ring Ball .6693 Cv25d 1
30	56265692	1	Adapter-.25 Stem-.25 Barb
31	56265746	1	Valve/Nozzle Assy-120v-Restore L1
31a	56265052	1	Nozzle Spray
31b	56265561	1	Valve-Solenoid-230v
32	56315321	1	Belt, Auto Tension
33	56381818	1	Bushing .32x.44x.15
34	56478246	1	Tie, Cable
35	56009111	1	Nut, Wing Ss 1/4-20
36	56265790	1	Gasket-Base-Elec Compartment
37	56265788	1	Gasket-Base-Rear

DECAL SYSTEM

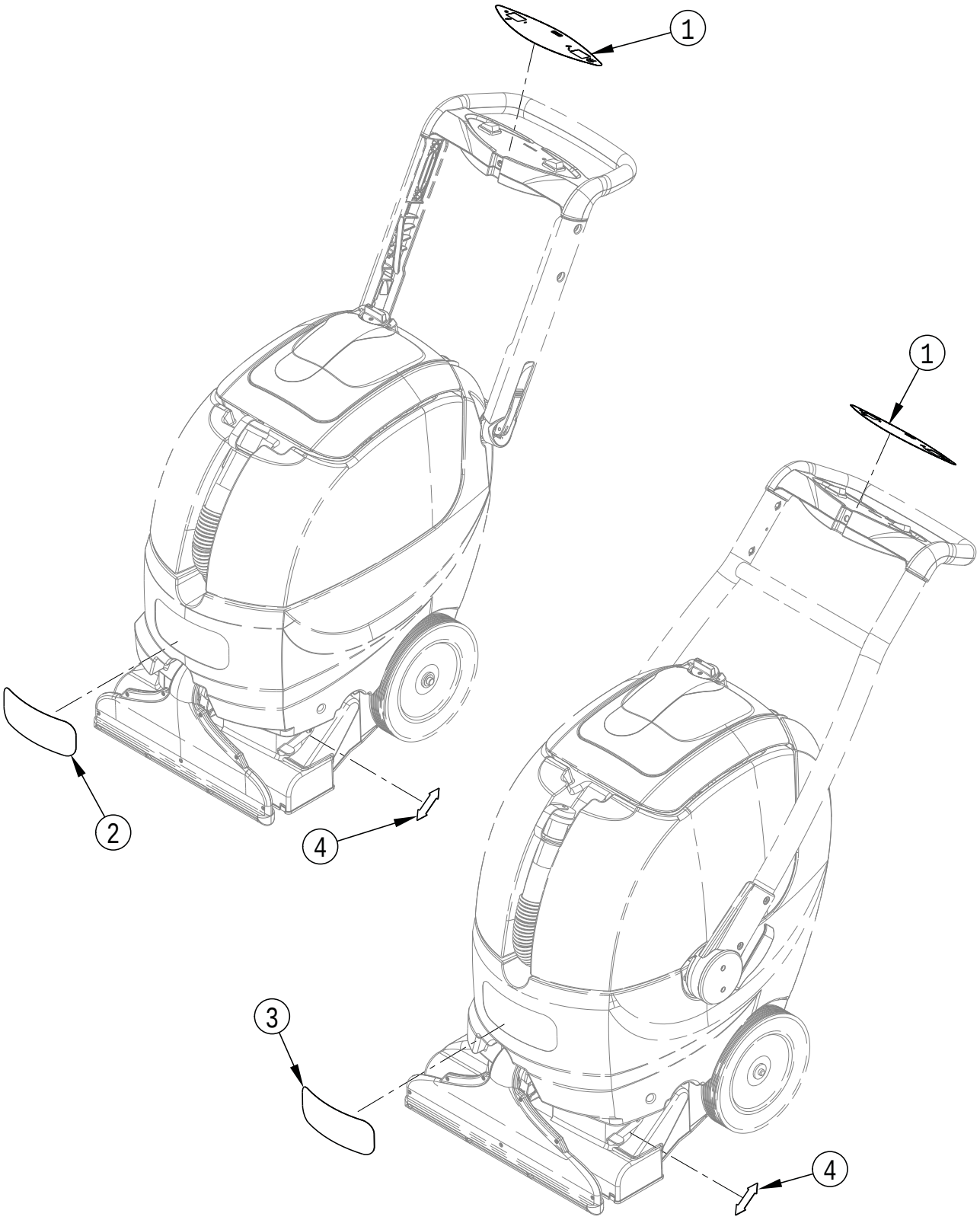

DECAL SYSTEM

Item	Ref. No.	Qty	Description
1	56265727	1	Decal-Panel-ST (16ST, 18LX)
2	56265730	1	Decal-Clarke EX40 16ST (16ST)
3	56265731	1	Decal-Clarke EX40 18LX (18LX)
4	56265750	1	Decal-Storage Lock (16ST, 18LX)

HANDLE SYSTEM 16ST

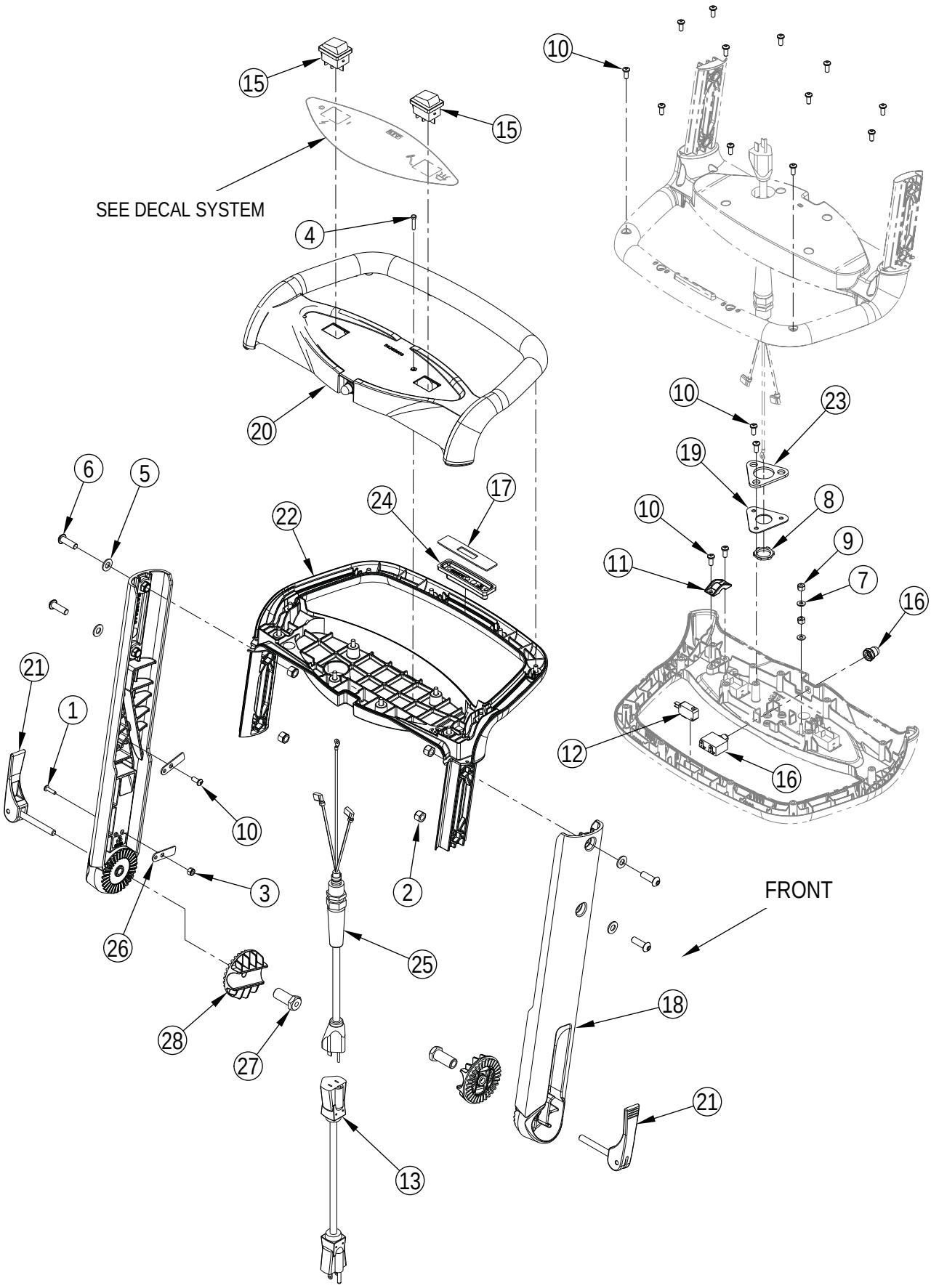

HANDLE SYSTEM 16ST

Item	Ref. No.	Qty	Description
1	56002146	1	Scr-Pan Phil 8-32 X .62
2	56002701	4	Nut, Hex Nyl Loc 5/16-18
3	56002808	1	Nut, Hex Nyl Loc 8-32
4	56002874	1	Scr- Hex Ss 8-32 X .75
5	56002938	4	Wsh-Flt Sae Ss 5/16
6	56003963	4	Scr-Botton Soc Ss 5/16-18x1.00
7	56009010	2	Wsh, Int Shprt #8
8	56009095	1	Nut, Conduit Lock 1/2-14
9	56009148	2	Nut-Hex Machine 8-32
10	56009191	17	Scr, Pan Phil Plastite 10-14 X .50
11	56264119	1	Clamp, Power Cord
12	56265098	1	Switch, Spdt Snapaction S4
13	56265112	1	Cord Set-14/3x50' Yel
[14]	56265547	1	Harness-Main
15	56265549	2	Switch-Rocker-Dpst S1
16	56265550	1	Circuit Breaker-W/Boot-5a CB1
17	56265564	1	Plate-Switch Retainer
18	56265648	2	Handle Tube-Ratchet
19	56265659	1	Plate-Cord Mounting
20	56265666	1	Handle-Top Cover-St
21	56265682	2	Lever-Locking Assembly
22	56265693	1	Handle-Bottom Cover-St
23	56265698	1	Gasket-Cord Mount
24	56265715	1	Button-Handle
25	56265718	1	Cord-Pigtail
26	56265748	2	Retainer-Harness
27	56265752	2	Bushing-Cam Adjustment
28	9097228000	2	Ratchet Handle Adjuster

[ ] = Not Shown

HANDLE SYSTEM 18LX

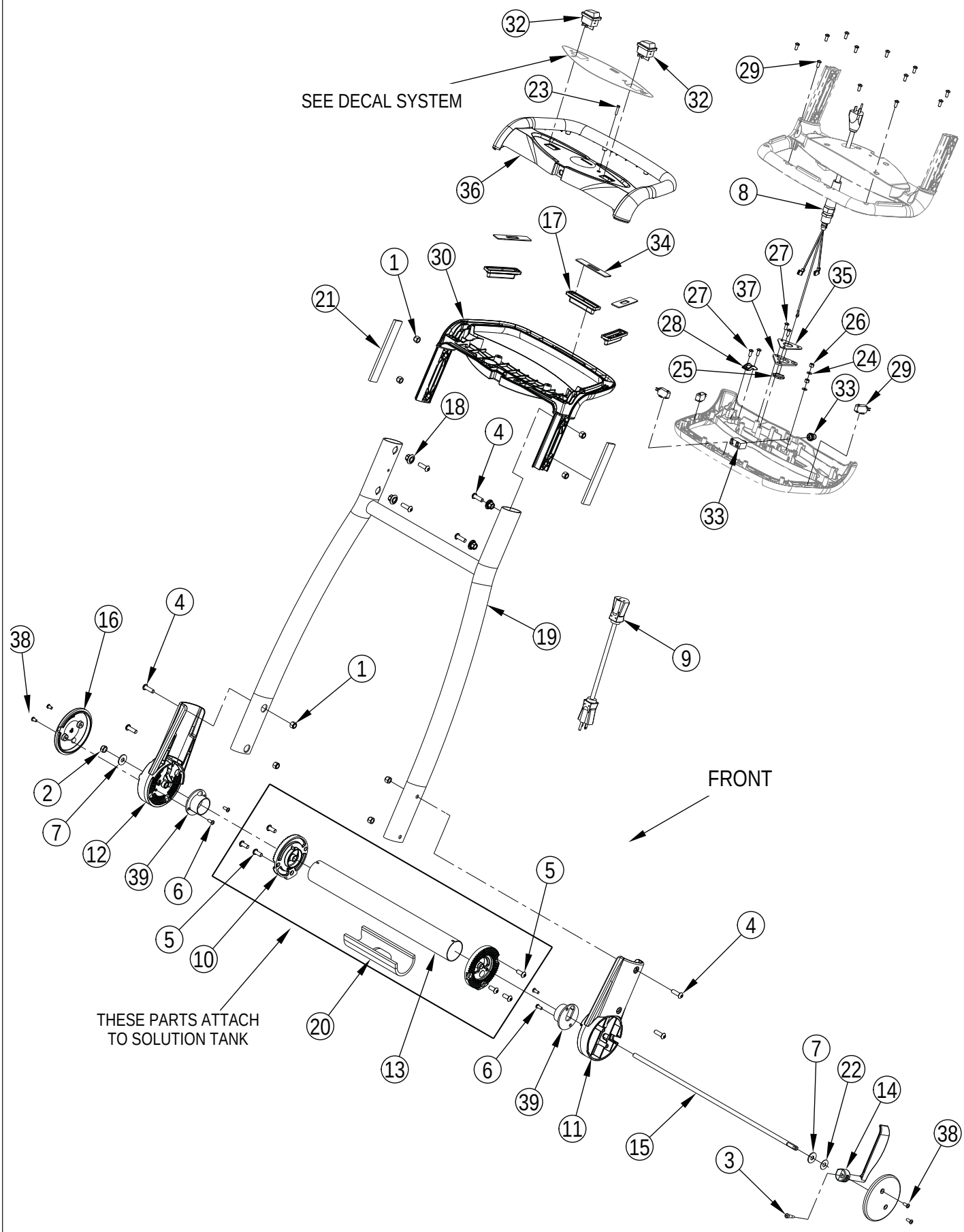

HANDLE SYSTEM 18LX

Item	Ref. No.	Qty	Description
1	56002701	8	Nut, Hex Nyl Loc 5/16-18
2	56002852	1	Nut, Hex Nyl Loc-Thin Ss 3/8-16
3	56003624	1	Scr-Soc Shd ..25 X .50 X 10-24
4	56003963	8	Scr-Botton Soc Ss 5/16-18x1.00
5	56003994	6	Scr-Button Soc Ss 5/16-18x.75
6	56009191	4	Scr, Pan Phil Plastite 10-14 X .50
7	56385358	2	Washer
8	56265718	1	Cord-Pigtail
9	56265112	1	Cord Set-14/3x50' Yel
10	56265525	2	Mount-Ratchet
11	56265526	1	Handle-Socket-W/Hole
12	56265527	1	Handle-Socket-W/O Hole
13	56265528	1	Sleeve-Steel-2.0 Dia
14	56265529	1	Lever-Cam
15	56265530	1	Shaft-Cam Lock
16	56265533	2	Cap-Ratchet
17	56265715	3	Button-Handle
18	56265658	4	Bushing-Handle
19	56265688	1	Handle Weldment
20	56265744	1	Gasket-Handle Tube
21	56265768	2	Gasket-Handle-.25 X 1.0 X 6.0
22	56632681	1	Washer, 3/8 Pl. Nylon
23	56002874	1	Scr- Hex Ss 8-32 X .75
24	56009010	2	Wsh, Int Shprt #8
25	56009095	1	Nut, Conduit Lock 1/2-14
26	56009148	2	Nut-Hex Machine 8-32
27	56009191	16	Scr, Pan Phil Plastite 10-14 X .50
28	56264119	1	Clamp, Power Cord
29	56265098	3	Switch, Spdt Snapaction S4 / S5 / S6
30	56265543	1	Handle-Bottom Cover
[31]	56265547	1	Harness-Main
32	56265549	2	Switch-Rocker-Dpst S1
33	56265550	1	Circuit Breaker-W/Boot-5a CB1
34	56265564	3	Plate-Switch Retainer
35	56265659	1	Plate-Cord Mounting
36	56265666	1	Handle-Top Cover-St
37	56265698	1	Gasket-Cord Mount
38	56009247	4	Scr Pn Phil Plastite 10-14x.38
39	56265786	2	Guide Ring Assy

[ ] = Not Shown

RECOVERY SYSTEM

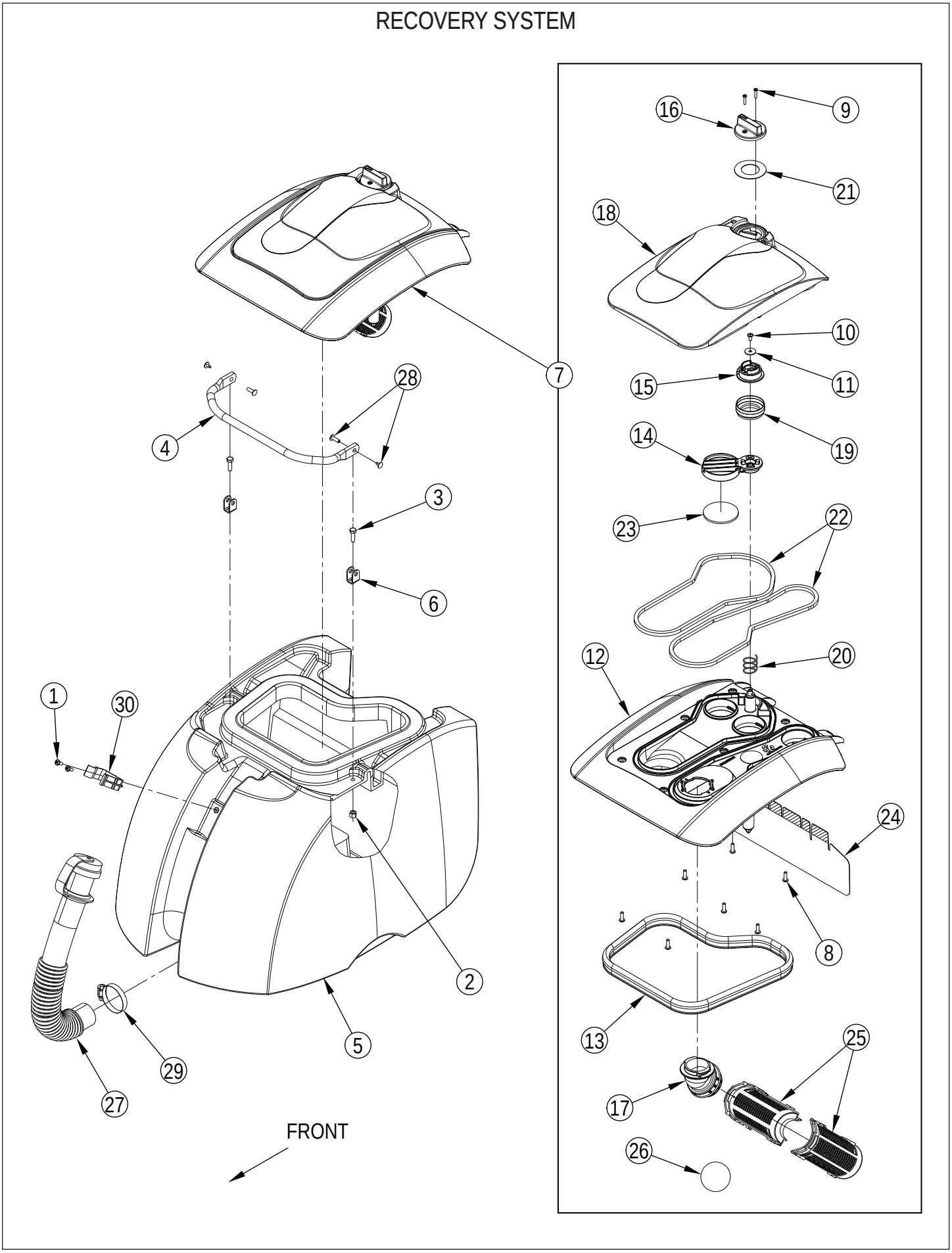

RECOVERY SYSTEM

Item	Ref. No.	Qty	Description
1	56002900	2	Scr-Pan Phil Ss 10-24 X .50
2	56003426	2	Nut, Hex Nyl Loc Ss M6-1
3	56003454	2	Scr-Hex Thd To Hd Ss M6-1 X 20mm
4	56265621	1	Handle-Tank
5	56265702	1	Recovery Tank-16-Blue (16ST)
	56265699	1	Recovery Tank-18-Blue (18LX)
6	56265630	2	Bracket-Handle Retainer
7		1	Recovery Lid Assembly
8	56002896	7	Scr-Pan Phil Ss 10-24 X .62
9	56003197	2	Scr, Pan Phil Plastite 6-18 X .62
10	56003913	1	Scr-Pan Phil Loc Ss 10-24 X .38
11	56009349	1	Wsh-Flt Ss .204 X .750 X .050
12	56265589	1	Lid-Recovery Tank
13	56265604	1	Gasket-Recovery Tank
14	56265651	1	Paddle-Valve
15	56265652	1	Actuator-Valve
16	56265653	1	Knob-Valve
17	56265654	1	Adapter-Ball Float
18	56265655	1	Cover-Recovery Lid
19	56265681	1	Seal-Diverter Valve
20	56265709	1	Spring-Compression-Ss
21	56265710	1	Seal-Selector Knob
22	56265737	2	Gasket-Lid-Poron-.25x.25
23	56265738	1	Gasket-Paddle-Poron-.125x2.38
24	56265783	1	Barrier-Flexible-Lid
25	56324497	2	Cage, Float
26	56391690	1	Ball- Float
27	56265685	1	Hose Drain 1.5 Inch
28	56265747	2	Binding Post-Quick Install
29	56329145	1	Clamp- Hose Sae #24
30	56331154	1	Clamp, Plastic

SOLUTION SYSTEM 16ST-1

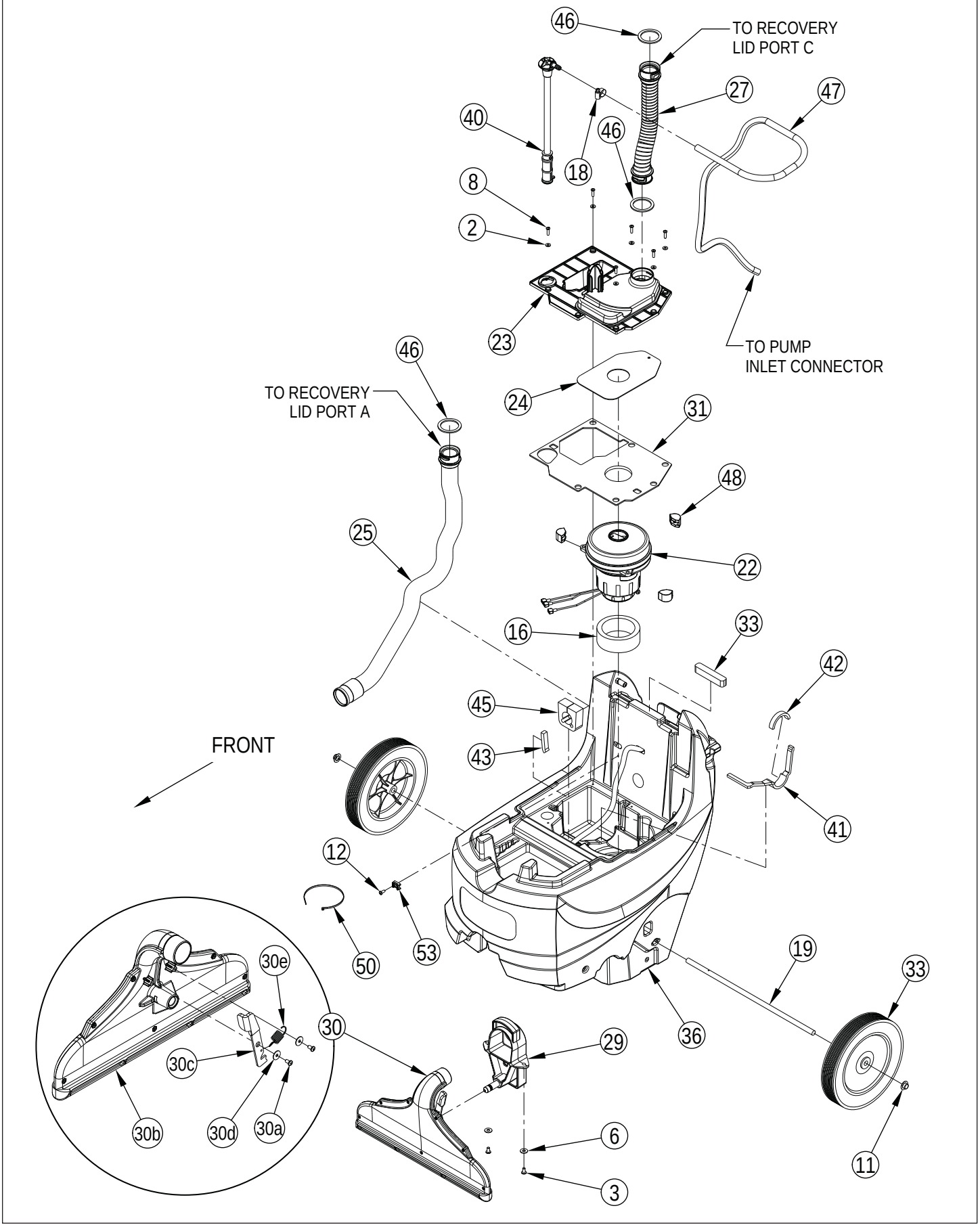

SOLUTION SYSTEM 16ST-1

Item	Ref. No.	Qty	Description
1	832803	1	Elbow-5/8 Hose
2	56001954	8	Wsh, Flt Sae #10
3	56003897	9	Scr-Pan Phil Loc Ss 1/4-20 X .50
4	56002624	1	Scr-Soc Shd .38 X 1.25 X 5/16-18
5	56003913	1	Scr-Pan Phil Loc Ss 10-24 X .38
6	56002914	2	Wsh, Flt Std Ss 1/4
7	56002958	2	Scr-Pan Phil Ss 1/4-20 X 1.25
8	56003091	7	Scr, Pan Phil Plastite 10-14 X .75
9	56009022	1	Wsh, Flt .754 X 1.250 X .120
10	56009042	2	Scr, Pan Phil Thd Form 10-24 X .62
11	56009097	2	Nut, Push Cap 1/2
12	56009191	4	Scr, Pan Phil Plastite 10-14 X .50
13	56052237	2	Spacer, Phenolic
14	56056903	1	Clamp-P
15	56109503	1	Double Barb Assy
16	56116110	1	Seal-Inlet
17	56116721	2	Grommet-.59x.78x.62
18	56219932	2	Clamp- Hose Sae #6
19	56265057	1	Axle
20	56265373	1	Hose .25x21.0 E00160
21	56265552	1	Motor-Vacuum-120v M2
	56265683	1	Carbon Brush Kit-(Set Of 2) for 56265552
22	56265554	1	Pump-115vac-120psi M1
23	56265582	1	Cover-Vac Motor
24	56265583	1	Plate-Vac Motor
25	56265586	1	Vac Hose Assembly
26	56265617	1	Cover-Vac Inlet
27	56265625	1	Hose Assembly
28	56265631	1	Cover-Back
29	56265646	1	Bracket-Shoe
30	56265650	1	Shoe/Latch Assembly-16
30a	56009247	2	Scr, Pan Phil Plastite 10-14x .38
30b	56265538	1	Shoe Assembly-16
30c	56265640	1	Latch-Shoe
30d	1326a	2	Washer Flat S.S 10 X11/1
30e	54196a	1	Spring Extension
31	56265665	1	Gasket-Vac Motor Cover
32	56265694	1	Gasket-Lid Support
33	56265697	2	Wheel-10.00x1.75x.50
34	56265704	1	Hook-Hose Storage
35	56265705	1	Socket-Quick Disconnect-1/8 Npt
36	56265706	1	Tank-Solution-16-Blue
37	56265708	1	Hose Assembly-Solution
38	56265712	1	Coupler-Barb-5/8
39	56265722	1	Gasket-Back Panel
40	56265725	1	Solution Filter Assembly-16
41	56265732	1	Gasket-Vac Exhaust Chamber
42	56265733	1	Gasket-Vac Exhaust Port
43	56265734	1	Gasket-Vac Chamber-Side
44	56265735	1	Gasket-Backpanel-Bottom
45	56265739	1	Gasket-Sound-Vac Hose
46	56265743	3	Gasket-Ring-Hose Cuff
47	56265766	1	Hose-Spiral-.500 X 52.00
48	56315141	3	Mount, Vibration
49	56383997	1	Hose-Pvc-5/8x19.00
50	56478523	2	Tie, Cable
51	56756364	2	Clamp- Hose Sae #4
52	56109566	1	Barb, 90 Elbow 1/2 X 3/8npt
53	9096595000	1	Flat Tie Holder
54	56112771	1	Clamp- Hose Sae #10
55	56265787	1	Boot-Pump
56	56265789	1	Gasket-Vac-Inlet Cover

SOLUTION SYSTEM 16ST-2

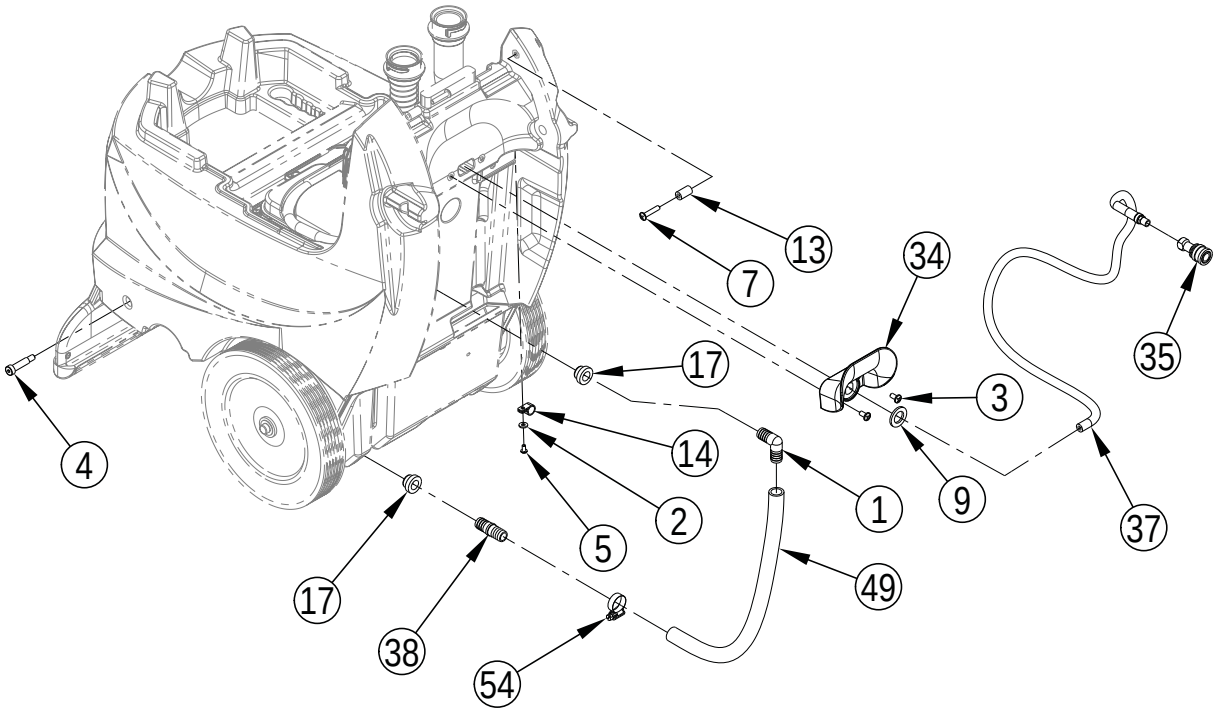

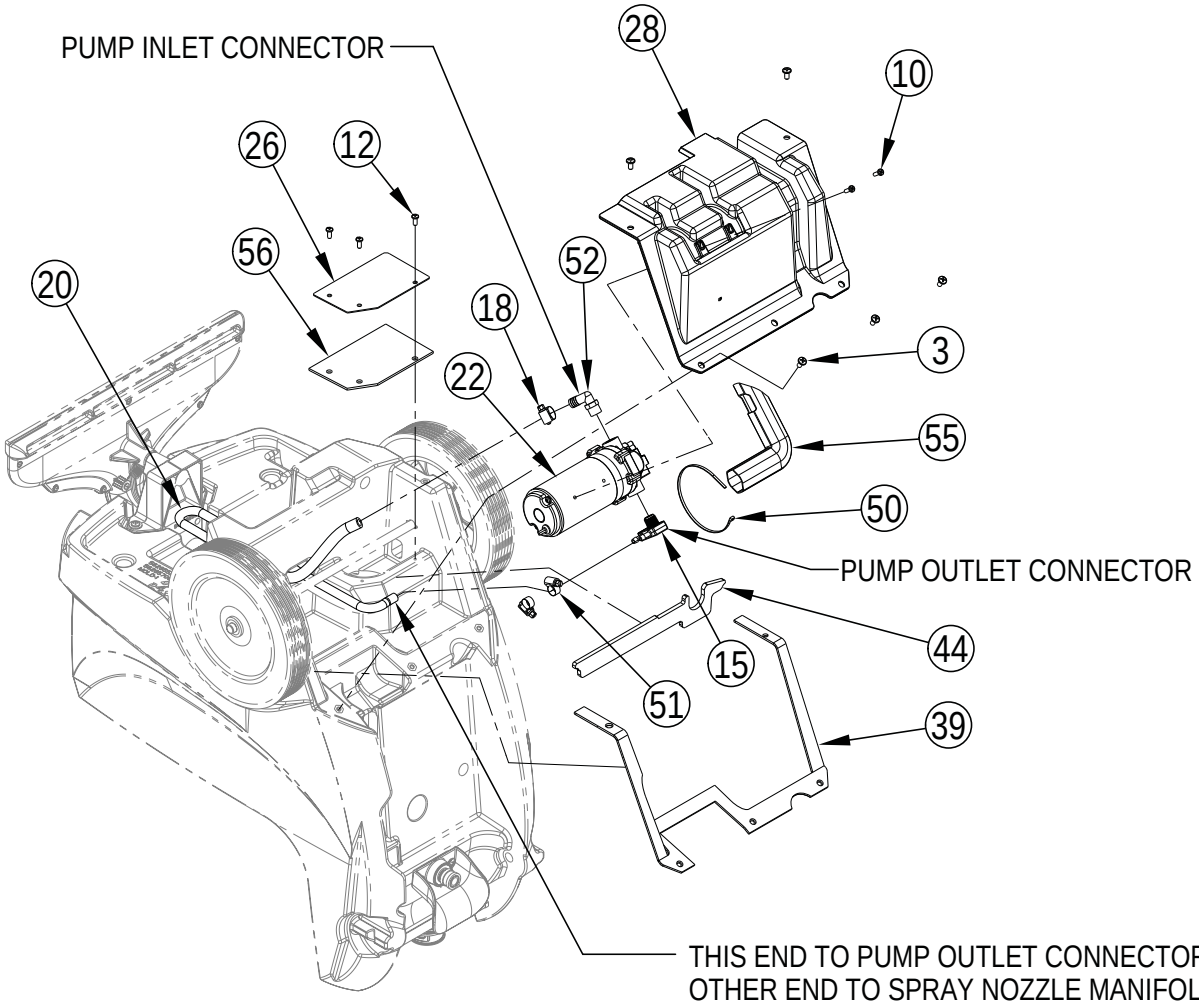

SOLUTION SYSTEM 16ST-2

Item	Ref. No.	Qty	Description
1	832803	1	Elbow-5/8 Hose
2	56001954	8	Wsh, Flt Sae #10
3	56003897	9	Scr-Pan Phil Loc Ss 1/4-20 X .50
4	56002624	1	Scr-Soc Shd .38 X 1.25 X 5/16-18
5	56003913	1	Scr-Pan Phil Loc Ss 10-24 X .38
6	56002914	2	Wsh, Flt Std Ss 1/4
7	56002958	2	Scr-Pan Phil Ss 1/4-20 X 1.25
8	56003091	7	Scr, Pan Phil Plastite 10-14 X .75
9	56009022	1	Wsh, Flt .754 X 1.250 X .120
10	56009042	2	Scr, Pan Phil Thd Form 10-24 X .62
11	56009097	2	Nut, Push Cap 1/2
12	56009191	4	Scr, Pan Phil Plastite 10-14 X .50
13	56052237	2	Spacer, Phenolic
14	56056903	1	Clamp-P
15	56109503	1	Double Barb Assy
16	56116110	1	Seal-Inlet
17	56116721	2	Grommet-.59x.78x.62
18	56219932	2	Clamp- Hose Sae #6
19	56265057	1	Axle
20	56265373	1	Hose .25x21.0 E00160
21	56265552	1	Motor-Vacuum-120v M2
	56265683	1	Carbon Brush Kit-(Set Of 2) for 56265552
22	56265554	1	Pump-115vac-120psi M1
23	56265582	1	Cover-Vac Motor
24	56265583	1	Plate-Vac Motor
25	56265586	1	Vac Hose Assembly
26	56265617	1	Cover-Vac Inlet
27	56265625	1	Hose Assembly
28	56265631	1	Cover-Back
29	56265646	1	Bracket-Shoe
30	56265650	1	Shoe/Latch Assembly-16
30a	56009247	2	Scr, Pan Phil Plastite 10-14x .38
30b	56265538	1	Shoe Assembly-16
30c	56265640	1	Latch-Shoe
30d	1326a	2	Washer Flat S.S 10 X11/1
30e	54196a	1	Spring Extension
31	56265665	1	Gasket-Vac Motor Cover
32	56265694	1	Gasket-Lid Support
33	56265697	2	Wheel-10.00x1.75x.50
34	56265704	1	Hook-Hose Storage
35	56265705	1	Socket-Quick Disconnect-1/8 Npt
36	56265706	1	Tank-Solution-16-Blue
37	56265708	1	Hose Assembly-Solution
38	56265712	1	Coupler-Barb-5/8
39	56265722	1	Gasket-Back Panel
40	56265725	1	Solution Filter Assembly-16
41	56265732	1	Gasket-Vac Exhaust Chamber
42	56265733	1	Gasket-Vac Exhaust Port
43	56265734	1	Gasket-Vac Chamber-Side
44	56265735	1	Gasket-Backpanel-Bottom
45	56265739	1	Gasket-Sound-Vac Hose
46	56265743	3	Gasket-Ring-Hose Cuff
47	56265766	1	Hose-Spiral-.500 X 52.00
48	56315141	3	Mount, Vibration
49	56383997	1	Hose-Pvc-5/8x19.00
50	56478523	2	Tie, Cable
51	56756364	2	Clamp- Hose Sae #4
52	56109566	1	Barb, 90 Elbow 1/2 X 3/8npt
53	9096595000	1	Flat Tie Holder
54	56112771	1	Clamp- Hose Sae #10
55	56265787	1	Boot-Pump
56	56265789	1	Gasket-Vac-Inlet Cover

SOLUTION SYSTEM 18LX-1

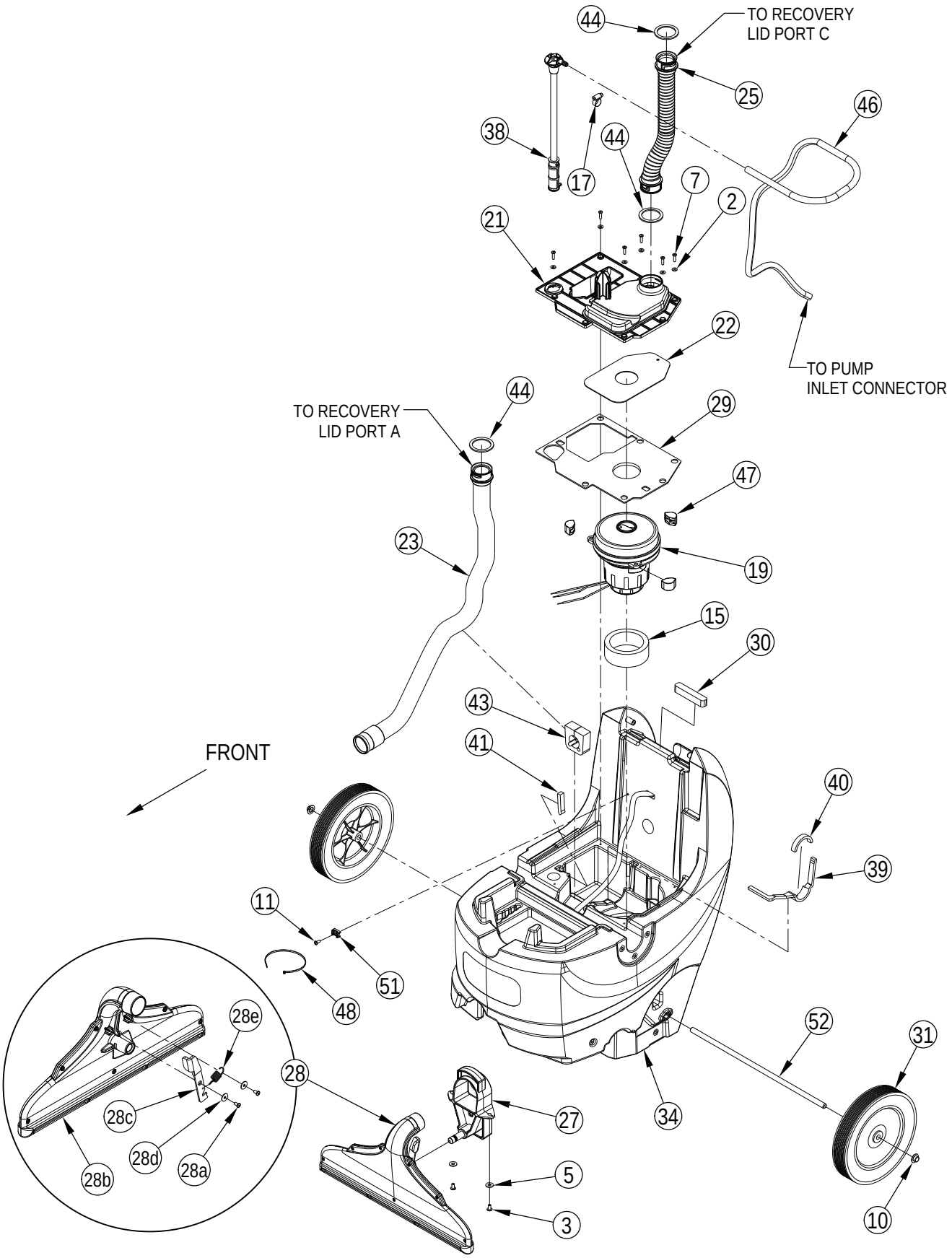

SOLUTION SYSTEM 18LX-1

Item	Ref. No.	Qty	Description
1	832803	1	Elbow-5/8 Hose
2	56001954	6	Wsh, Flt Sae #10
3	56003897	9	Scr-Pan Phil Loc Ss 1/4-20 X .50
4	56002624	1	Scr-Soc Shd .38 X 1.25 X 5/16-18
5	56002914	2	Wsh, Flt Std Ss 1/4
6	56002958	2	Scr-Pan Phil Ss 1/4-20 X 1.25
7	56003091	6	Scr, Pan Phil Plastite 10-14 X .75
8	56009022	1	Wsh, Flt .754 X 1.250 X .120
9	56009042	2	Scr, Pan Phil Thd Form 10-24 X .62
10	56009097	2	Nut, Push Cap 1/2
11	56009191	4	Scr, Pan Phil Plastite 10-14 X .50
12	56052237	2	Spacer, Phenolic
13	56109503	1	Double Barb Assy
14	56112771	1	Clamp- Hose Sae #10
15	56116110	1	Seal-Inlet
16	56116721	2	Grommet-.59x.78x.62
17	56219932	2	Clamp- Hose Sae #6
18	56265373	1	Hose .25x21.0 E00160
19	56265552	1	Motor-Vacuum-120v M2
	56265683	1	Carbon Brush Kit-(Set Of 2) for 56265552
20	56265554	1	Pump-115vac-120psi M1
21	56265582	1	Cover-Vac Motor
22	56265583	1	Plate-Vac Motor
23	56265586	1	Vac Hose Assembly
24	56265617	1	Cover-Vac Inlet
25	56265625	1	Hose Assembly
26	56265631	1	Cover-Back
27	56265646	1	Bracket-Shoe
28	56265662	1	Shoe/Latch Assembly-18
28a	56009247	2	Scr, Pan Phil Plastite 10-14x .38
28b	56265538	1	Shoe Assembly-16
28c	56265640	1	Latch-Shoe
28d	1326a	2	Washer Flat S.S 10 X11/1
28e	54196a	1	Spring Extension

Item	Ref. No.	Qty	Description
29	56265665	1	Gasket-Vac Motor Cover
30	56265694	1	Gasket-Lid Support
31	56265697	2	Wheel-10.00x1.75x.50
32	56265704	1	Hook-Hose Storage
33	56265705	1	Socket-Quick Disconnect-1/8 Npt
34	56265707	1	Tank-Solution-18-Blue
35	56265708	1	Hose Assembly-Solution
36	56265712	1	Coupler-Barb-5/8
37	56265722	1	Gasket-Back Panel
38	56265726	1	Solution Filter Assembly-18
39	56265732	1	Gasket-Vac Exhaust Chamber
40	56265733	1	Gasket-Vac Exhaust Port
41	56265734	1	Gasket-Vac Chamber-Side
42	56265735	1	Gasket-Backpanel-Bottom
43	56265739	1	Gasket-Sound-Vac Hose
44	56265743	3	Gasket-Ring-Hose Cuff
45	56265745	1	Hose-Pvc-5/8x20.60
46	56265766	1	Hose-Spiral-.500 X 52.00
47	56315141	3	Mount, Vibration
48	56478523	2	Tie, Cable
49	56756364	2	Clamp- Hose Sae #4
50	56109566	1	Barb, 90 Elbow 1/2 X 3/8npt
51	9096595000	1	Flat Tie Holder
52	910-1863	1	Axel Rod Zinc Plated 1/2 Ro
53	56265787	1	Boot-Pump
54	56265789	1	Gasket-Vac-Inlet Cover

SOLUTION SYSTEM 18LX-2

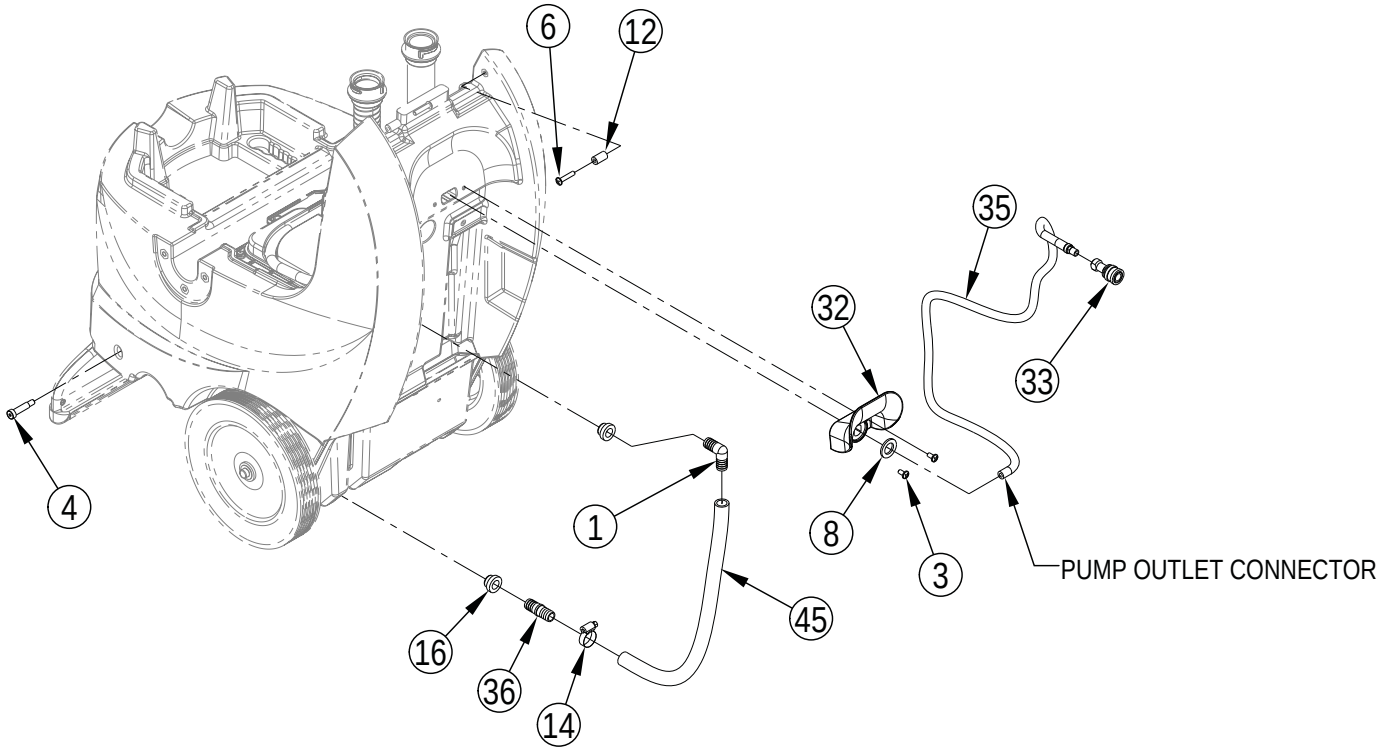

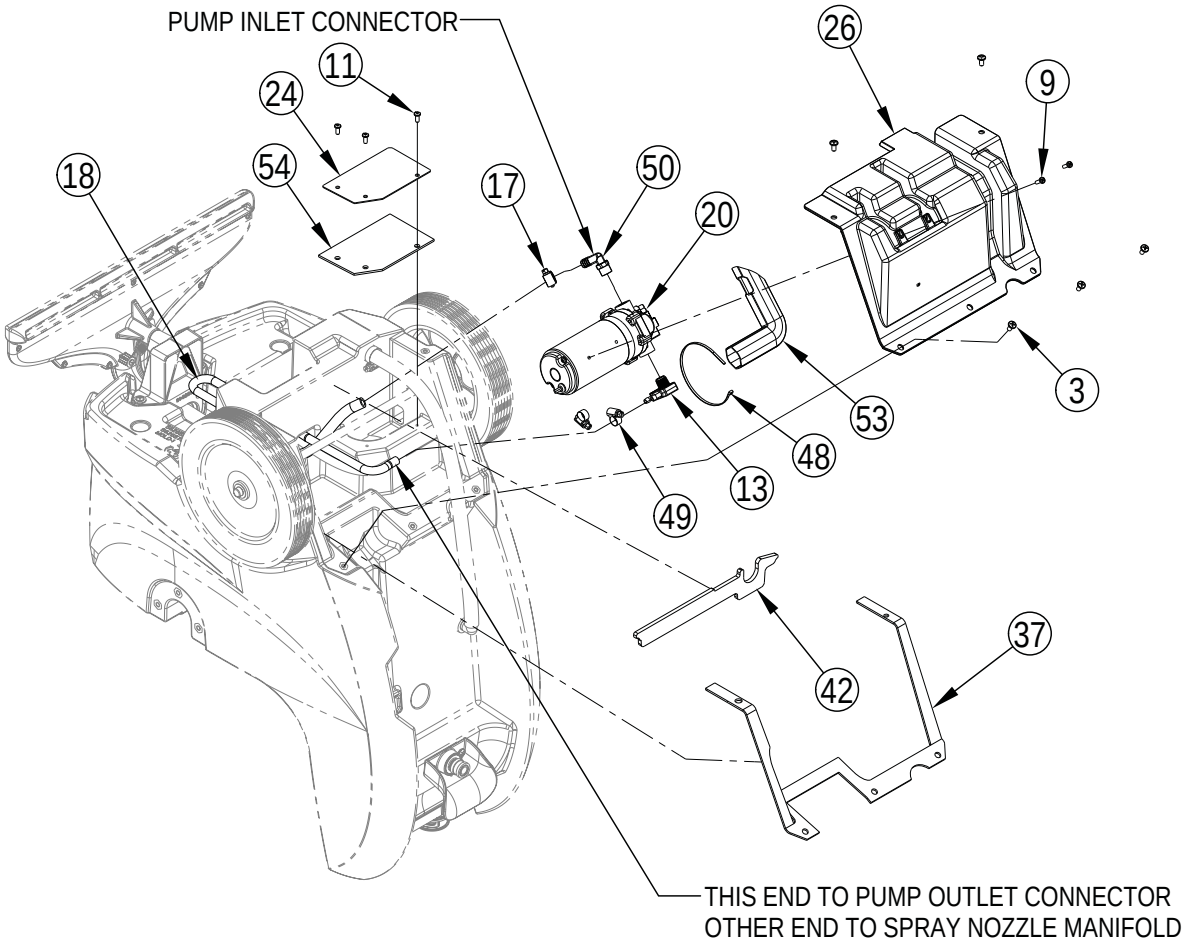

SOLUTION SYSTEM 18LX-2

Item	Ref. No.	Qty	Description
1	832803	1	Elbow-5/8 Hose
2	56001954	6	Wsh, Flt Sae #10
3	56003897	9	Scr-Pan Phil Loc Ss 1/4-20 X .50
4	56002624	1	Scr-Soc Shd .38 X 1.25 X 5/16-18
5	56002914	2	Wsh, Flt Std Ss 1/4
6	56002958	2	Scr-Pan Phil Ss 1/4-20 X 1.25
7	56003091	6	Scr, Pan Phil Plastite 10-14 X .75
8	56009022	1	Wsh, Flt .754 X 1.250 X .120
9	56009042	2	Scr, Pan Phil Thd Form 10-24 X .62
10	56009097	2	Nut, Push Cap 1/2
11	56009191	4	Scr, Pan Phil Plastite 10-14 X .50
12	56052237	2	Spacer, Phenolic
13	56109503	1	Double Barb Assy
14	56112771	1	Clamp- Hose Sae #10
15	56116110	1	Seal-Inlet
16	56116721	2	Grommet-.59x.78x.62
17	56219932	2	Clamp- Hose Sae #6
18	56265373	1	Hose .25x21.0 E00160
19	56265552	1	Motor-Vacuum-120v M2
	56265683	1	Carbon Brush Kit-(Set Of 2) for 56265552
20	56265554	1	Pump-115vac-120psi M1
21	56265582	1	Cover-Vac Motor
22	56265583	1	Plate-Vac Motor
23	56265586	1	Vac Hose Assembly
24	56265617	1	Cover-Vac Inlet
25	56265625	1	Hose Assembly
26	56265631	1	Cover-Back
27	56265646	1	Bracket-Shoe
28	56265662	1	Shoe/Latch Assembly-18
28a	56009247	2	Scr, Pan Phil Plastite 10-14x .38
28b	56265538	1	Shoe Assembly-16
28c	56265640	1	Latch-Shoe
28d	1326a	2	Washer Flat S.S 10 X11/1
28e	54196a	1	Spring Extension

Item	Ref. No.	Qty	Description
29	56265665	1	Gasket-Vac Motor Cover
30	56265694	1	Gasket-Lid Support
31	56265697	2	Wheel-10.00x1.75x.50
32	56265704	1	Hook-Hose Storage
33	56265705	1	Socket-Quick Disconnect-1/8 Npt
34	56265707	1	Tank-Solution-18-Blue
35	56265708	1	Hose Assembly-Solution
36	56265712	1	Coupler-Barb-5/8
37	56265722	1	Gasket-Back Panel
38	56265726	1	Solution Filter Assembly-18
39	56265732	1	Gasket-Vac Exhaust Chamber
40	56265733	1	Gasket-Vac Exhaust Port
41	56265734	1	Gasket-Vac Chamber-Side
42	56265735	1	Gasket-Backpanel-Bottom
43	56265739	1	Gasket-Sound-Vac Hose
44	56265743	3	Gasket-Ring-Hose Cuff
45	56265745	1	Hose-Pvc-5/8x20.60
46	56265766	1	Hose-Spiral-.500 X 52.00
47	56315141	3	Mount, Vibration
48	56478523	2	Tie, Cable
49	56756364	2	Clamp- Hose Sae #4
50	56109566	1	Barb, 90 Elbow 1/2 X 3/8npt
51	9096595000	1	Flat Tie Holder
52	910-1863	1	Axel Rod Zinc Plated 1/2 Ro
53	56265787	1	Boot-Pump
54	56265789	1	Gasket-Vac-Inlet Cover

LADDER DIAGRAM 16ST

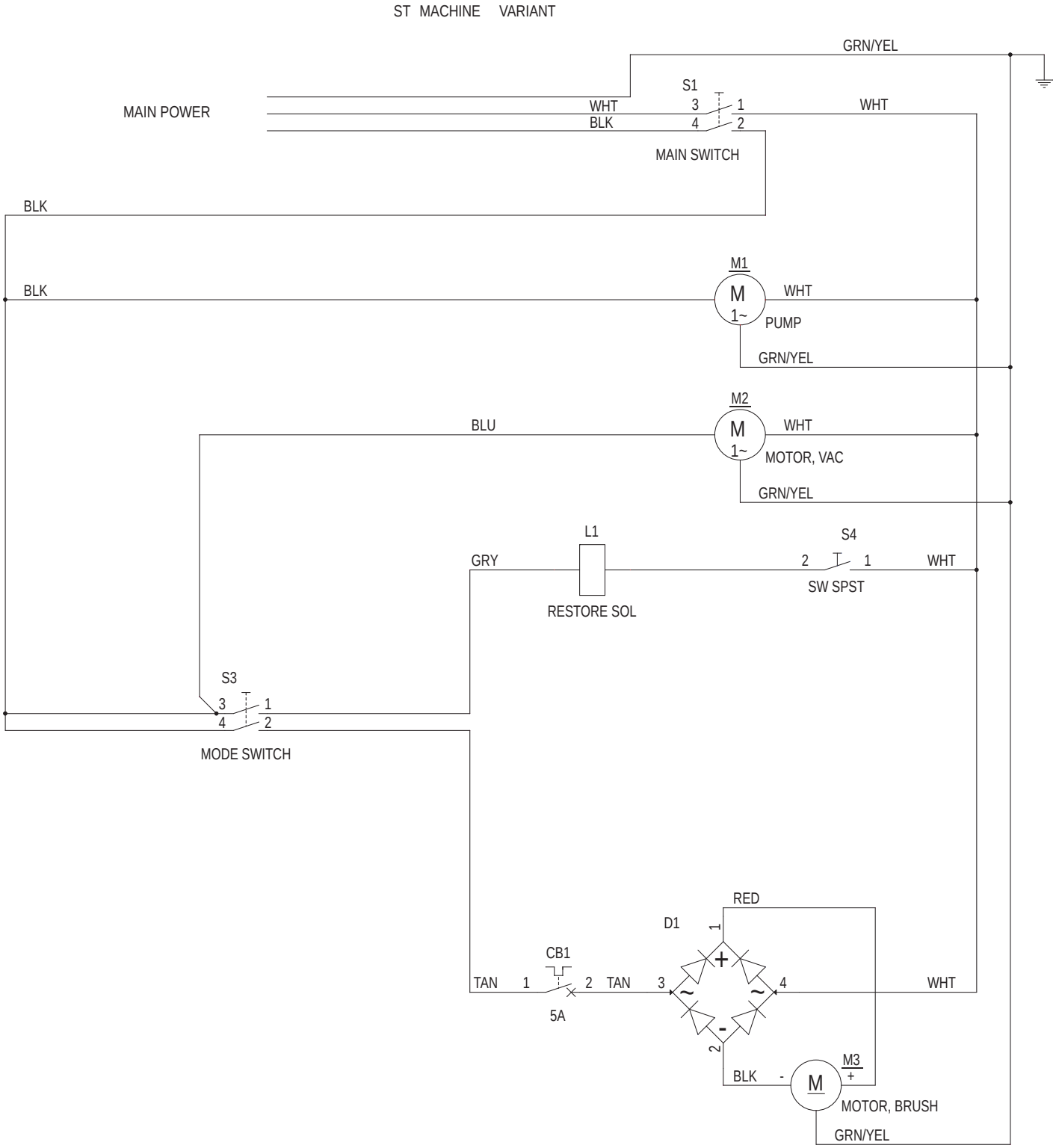

LADDER DIAGRAM 16ST

Item	Ref. No.	Qty	Description
CB1	56265550	1	Circuit Breaker, 5 Amp
D1	56265103	1	Rectifier, 35 Amp
L1	56265746	1	Valve, Solenoid 115V
M1	56265554	1	Pump-115vac-120psi
M2	56265552	1	Motor-Vacuum-120v
	56265683		Carbon Brush Kit-(Set Of 2) for 56265552
M3	56265075	1	Motor, 115 Vdc, 1/3 Hp
S1	56265549	1	Switch-Rocker-Dpst
S3	56265549	1	Switch-Rocker-Dpst
S4	56265098	1	Switch, Spdt Snapaction

LADDER DIAGRAM 18LX

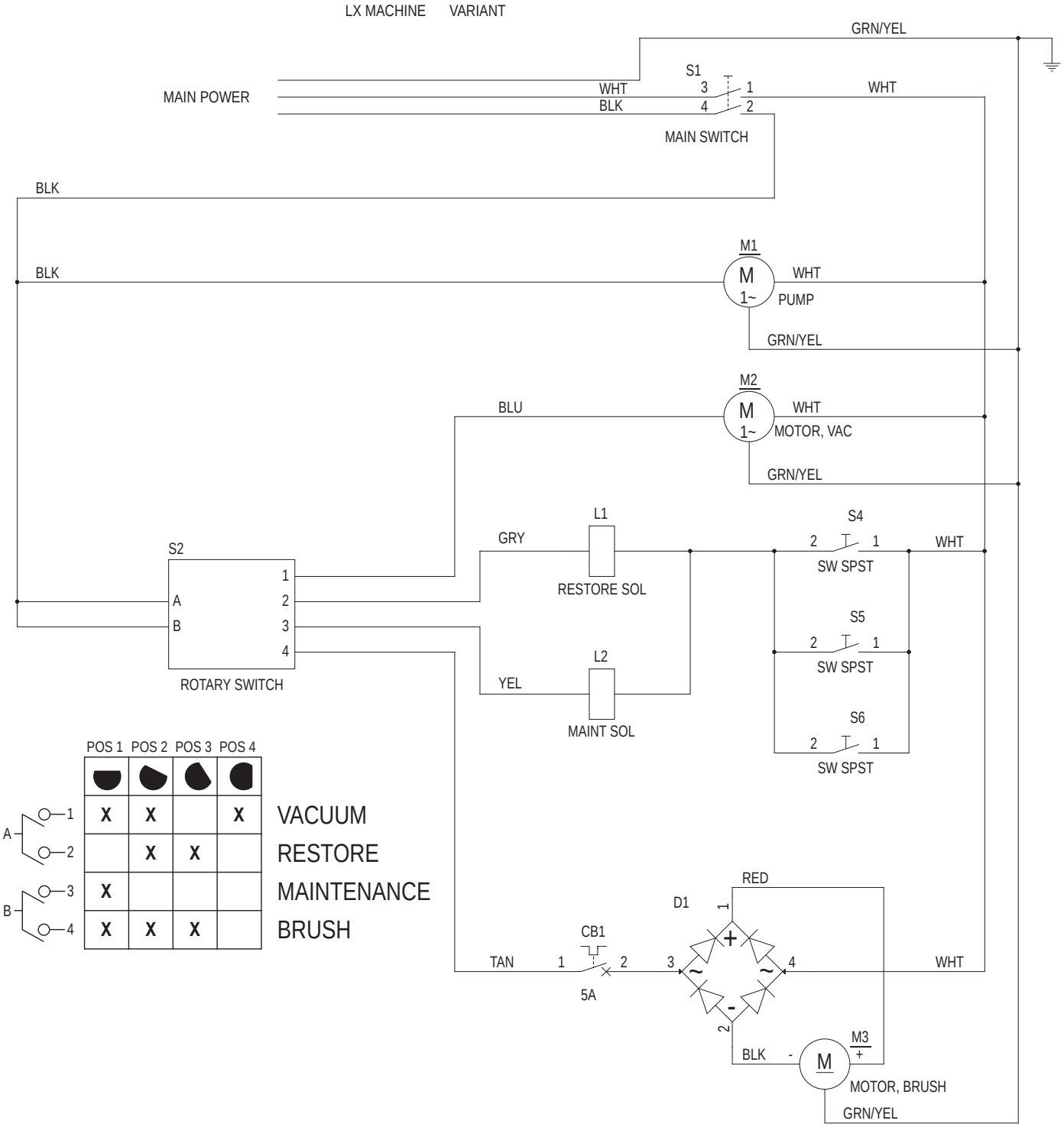

LADDER DIAGRAM 18LX

Item	Ref. No.	Qty	Description
CB1	56265550	1	Circuit Breaker, 5 Amp
D1	56265103	1	Rectifier, 35 Amp
L1	56265746	1	Valve, Solenoid 115V
L2	56265570	1	Valve/Nozzle Assy-120v-Maint
M1	56265554	1	Pump-115vac-120psi
M2	56265552	1	Motor-Vacuum-120v
	56265683		Carbon Brush Kit-(Set Of 2) for 56265552
M3	56265075	1	Motor, 115 Vdc, 1/3 Hp
S1	56265549	1	Switch-Rocker-Dpst
S2	56265551	1	Rotary Switch
S4	56265098	1	Switch, Spdt Snapaction
S5	56265098	1	Switch, Spdt Snapaction
S6	56265098	1	Switch, Spdt Snapaction

OPTIONS & ACCESSORIES

Item	Ref. No.	Qty	Description
			Options
	56265044	1	Brush Assembly 16
	56265175	1	Brush Assembly Blue 16 Hard
	56265176	1	Brush Assembly 240 Grit 16
	56265099	1	Brush Assembly 18
	56265177	1	Brush Assembly Blue 18 Hard
	56265178	1	Brush Assembly 240 Grit 18
			Accessories
	56314402	1	Wand Assembly w/Soft and Hard Floor Tools
	56265173	1	Wand Assembly w/Soft Floor Tool
	56220070	1	Upholstery Hand Tool
	56265305	1	Drag Wand
	56265306	1	Scrub and Vac Wand
	56265309	1	Plug Adaptor Kit
	56265174	1	15’ Hose w/Waterline
	56265753	1	Hose Assy – 96 In.
	56265754	1	Hose Assy – 184 In.
	56265767	1	Hand Tool/Hoses Assembly
	56265675	1	Hard Floor Tool Assembly
	56044699	1	Literature Pack
			Brushes (See Brush Selector Guide)

BRUSH SELECTOR GUIDE

We provide brushes that will give you the best possible performance between machine and floor. Following are descriptions of the materials and their applications.

Soft Nylon Brush: Carpet cleaning brush also used on soft-finish floors where a more aggressive brush would leave scratch marks, or in applications requiring light cleaning.

Stiff Nylon Brush (Blue): Hard floor cleaning effective in cleaning most common surfaces.

240 Grit Brush: Medium aggressive grit brush. Good all-around brush for medium to heavy buildup removal on hard floors.

16” BRUSHES	18” BRUSHES
56265044 - Nylon	56265099 - Nylon
56265175 - Blue	56265177 - Blue
56265176 - 240 Grit	56265178 - 240 Grit

CYLINDRICAL BRUSH APPLICATION GUIDE (SUGGESTION ONLY)

Application General Cleaning:	Nylon	Blue	240 Grit
Carpet Cleaning	X		
Concrete		X	X
Terrazzo	X	X	X
Ceramic/Quarry tile	X	X	X
Marble	X	X	X
Vinyl tile	X	X	X
Raised-rubber tile	X	X	X

9435 Winnetka Ave North
Minneapolis, MN 55445
www.clarkeus.com
Phone: 800-253-0367
Fax: 800-825-2753
©2016 Nilfisk, Inc.

A Nilfisk Brand