ReliaVac™ 12HP

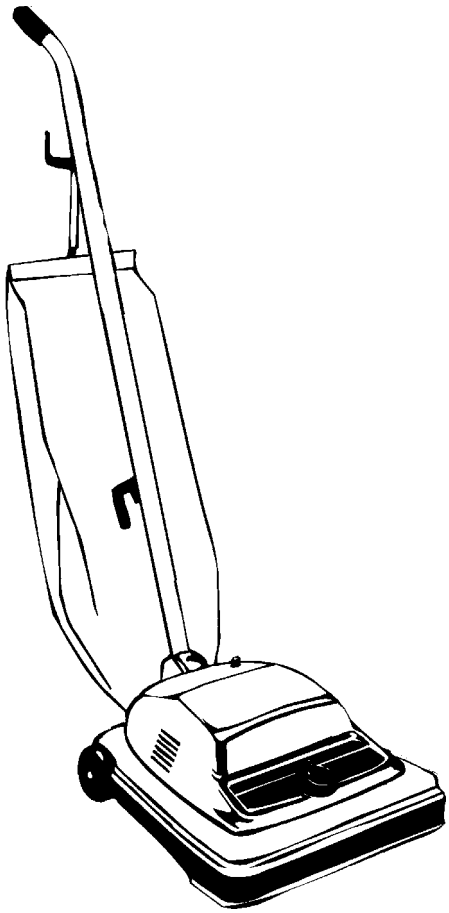

PARTS LIST

MODELS: 56648071, 03004A

11/04 revised 3/11 FORM NO. 56042457

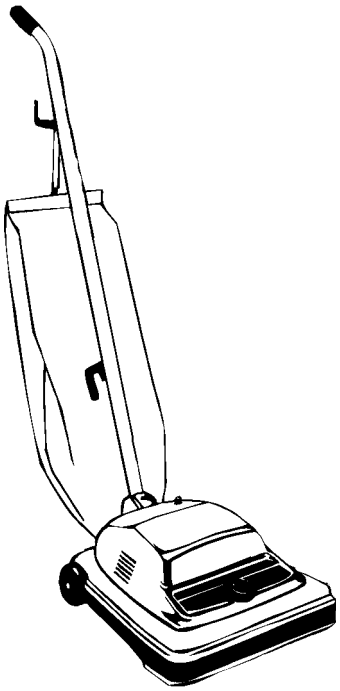

DESCRIPTION **PAGE**

Base Assembly 2-3
Handle Assembly 4-5
Wiring Diagram 5
Handle Assembly (Optional Dirt Cup) 6-7

WHEN ORDERING PARTS

* Use the part numbers from the “Ref. No.” columns in this parts list.
* Specify the model and serial number of the machine.
* Use the space below to record the model and serial number for future reference.

Model _____ Serial No. _____

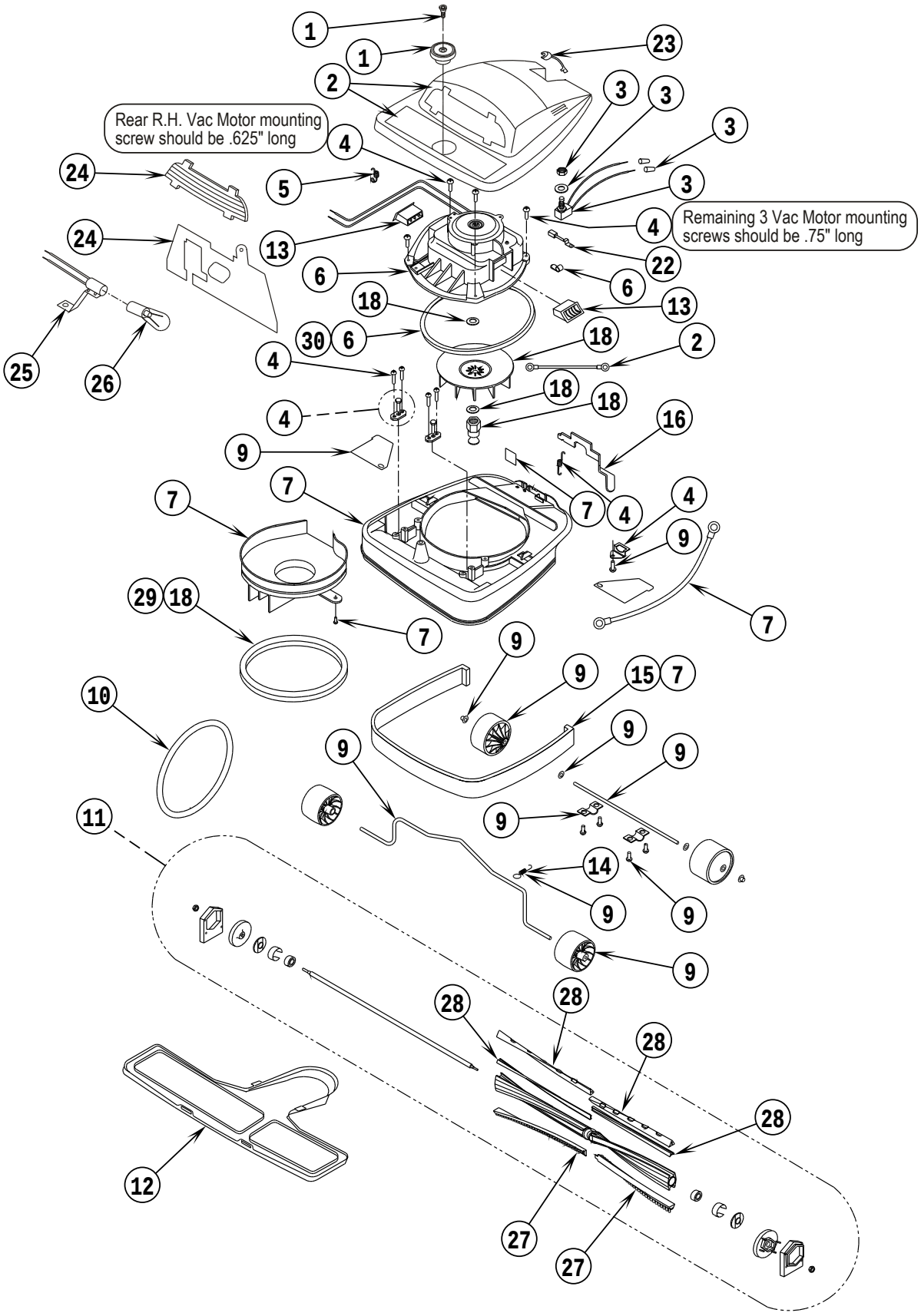

FORM NO. 56042457

BASE ASSEMBLY

ReliaVac™ 12HP

Item	Ref. No.	Qty	Description
1	56648400	1	Brush Height Knob Assembly
2	56648403	1	Hood Assembly-Grey
	30863A	1	Hood Assembly-Black
3	56648405	1	Switch Assembly
4	56648410	1	Hardware Kit Base
5	56630765	2	Spring, Ext .304d .930l .055wd
6	56648406	1	Motor & Seal Assembly
7	56648407	1	Base Assembly-Grey
	60584A	1	Base Assembly-Black
9	56648422	1	Wheel Assembly
10#	56381764	1	Reliavac Superbelt
11	56630492	1	Disturbulator, Assembly
12	56630478	1	Asm, Plate--Bottom
13	56648418	1	Air Duct Assembly
14	56630620	1	Spring, Ext .275d 1.50l .024wd
15	56630508	1	Guard, Furn--Clear Blue, 31.00l
16	56630395	1	Pedal, Foot--Uprt, White
18	56648420	1	Pulley and Fan Kit
	30864A	1	Pulley and Fan Kit-Green
22	56630561	2	Carbon Brush, Mtr
23	56648417	1	Power Cord Assembly **(see #1 on page 5 and #3 on page 7)**
24	56648426	1	Light/Lens Kit
25	56630680	1	Asm, Headlamp Socket
26	56630722	1	Lamp, Headlight, 115V
27	56648413	1	Brush Strip Kit
28	56648415	1	Beater Bar Kit
29	56630562	1	Gasket-Motor Seal
30	56648178	1	Gasket-Motor Seal
**	56052964	1	Magnet, Permanent
**	56630325	1	Upright Vacuum Accessory Kit

* = Not Shown
** = Not Included (optional)
# = Revised or new since last update

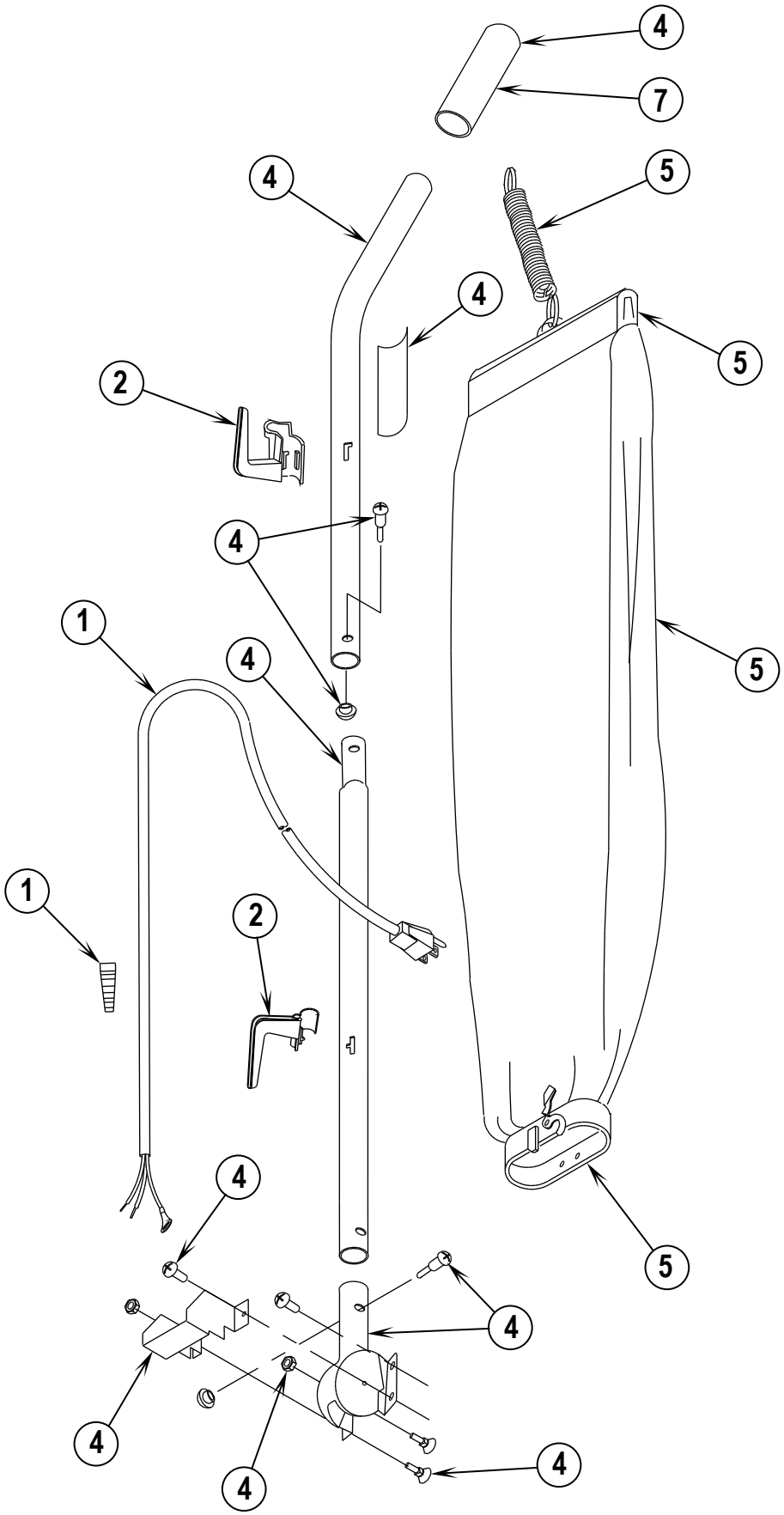
4
7
4
5
4
5
2
4
1
4
5
1
2
4
5
4
4
4
4

Item	Ref. No.	Qty	Description
1	56648417	1	Power Cord Assembly **(see #23 on page 3)**
2	56648421	1	Hook Assembly
4	56648424	1	Handle Assembly
5	56648423	1	Bag Assembly
7	56648429	1	Grip, Handle—Dark Gray
**	56035451	1	Asm, Bag Zip Gray TYT HD Com
**	30880A	1	Cloth Zipper Bag-Black
**	56637120	A/R	Disposable Paper Bag (pkg of 10)
**	56039515	1	Kit, Dirt Cup Conversion
**	56630249	1	Dirt Cup, Clear Plastic
**	56648404	1	Dirt Cup Bag Kit
**	56648427	1	Dirt Cup Bellows Kit

* = Not Shown
** = Not Included (optional)

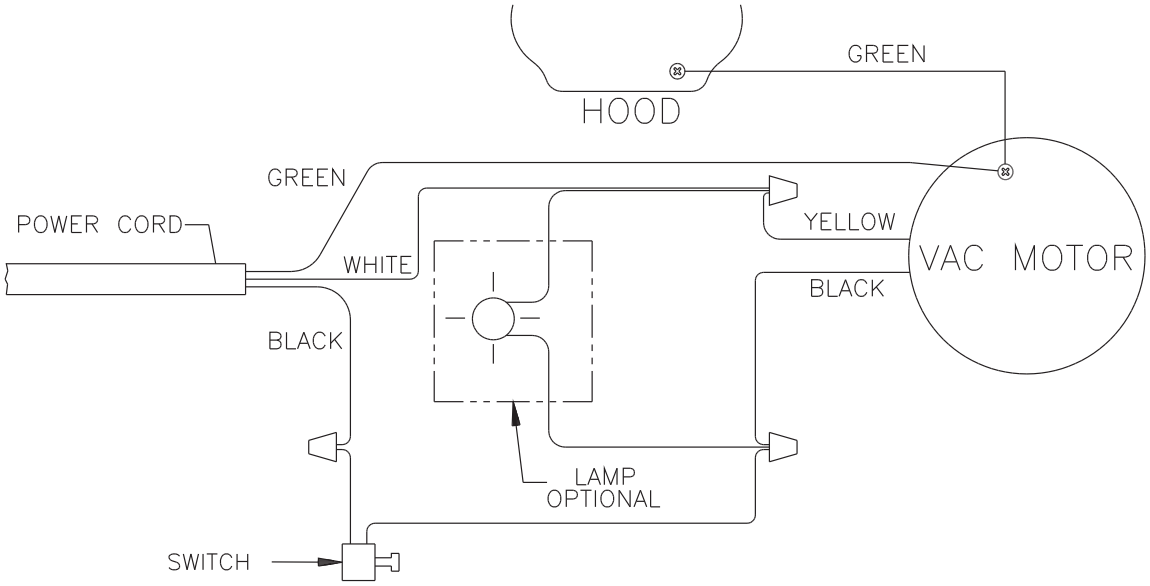

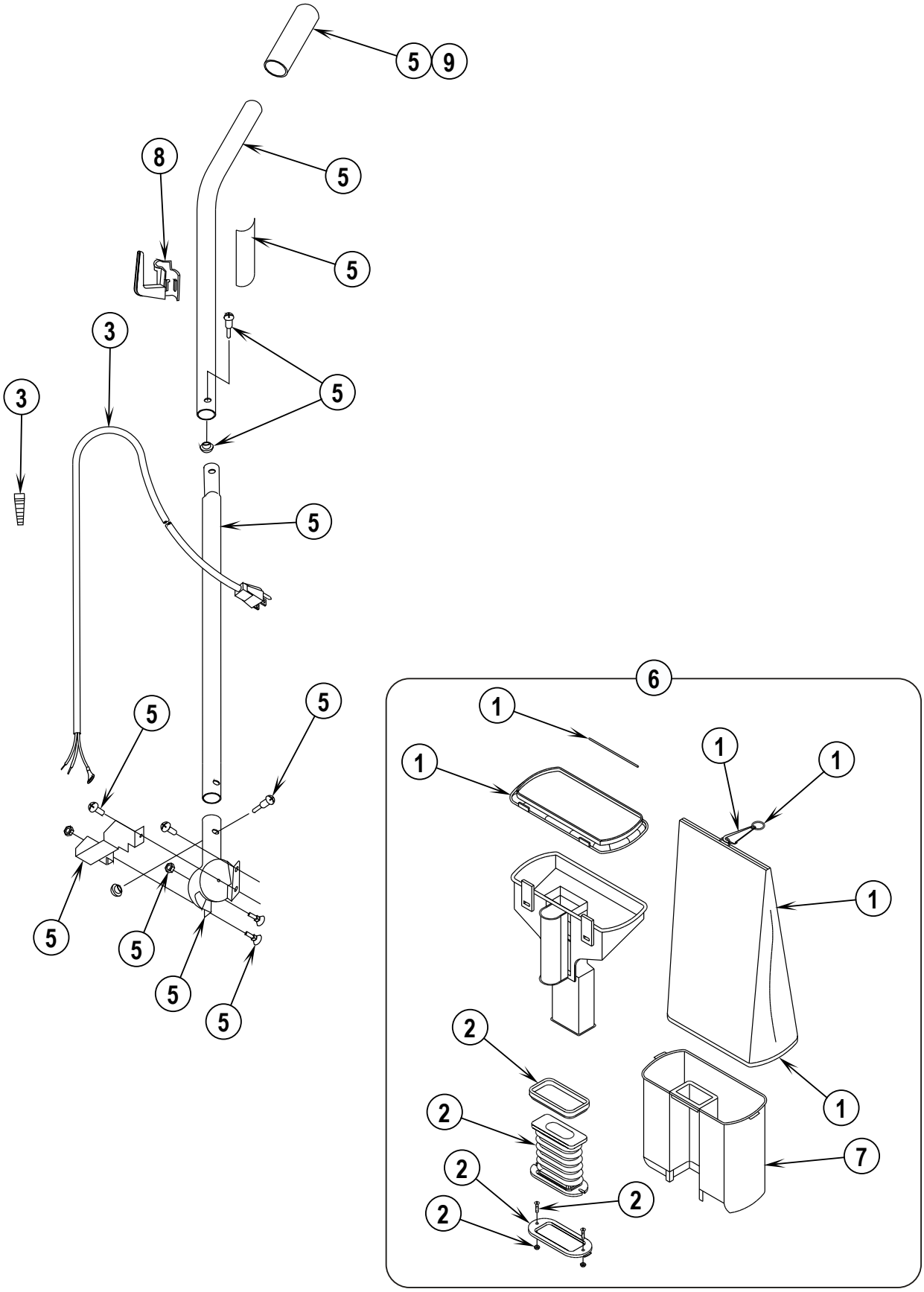

FORM NO. 56042457

HANDLE ASSEMBLY (OPTIONAL DIRT CUP)

ReliaVac™ 12HP

Item	Ref. No.	Qty	Description
1	56648404	1	Dirt Cup Bag Kit
2	56648427	1	Dirt Cup Bellows Kit
3	56648417	1	Power Cord Assy **(see #23 on page 3)**
5	56648411	1	Handle Assy
6	56039515	1	Dirt Cup Kit
7	56630249	1	Cup--Dirt,Clear Plstc
8	56630353	1	Hook,Cord--Uprt,Dark Gray
9	56648429	1	Grip,Handle—Dark Gray

Nilfisk-Advance, Inc.
Plymouth, MN 55447-3408
© 2011