M20
(Gas/LPG)

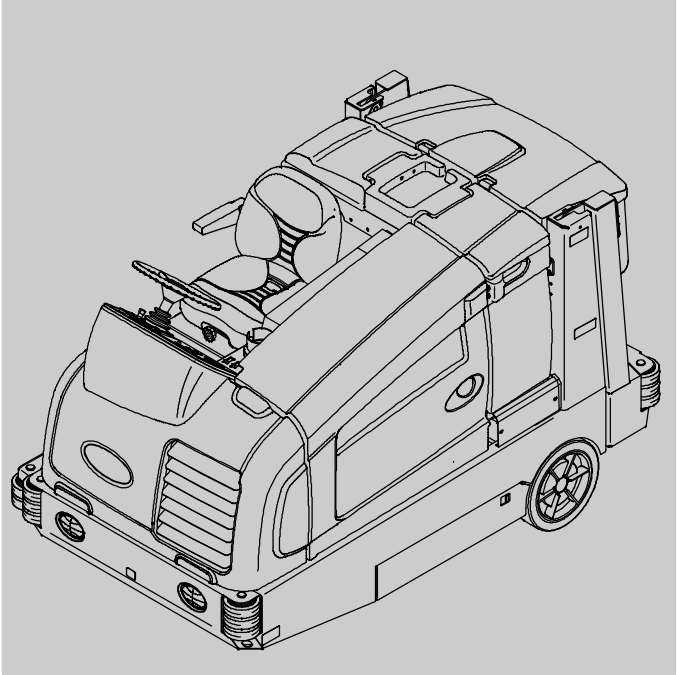

Scrubber-Sweeper Parts Manual

The Safe Scrubbing Alternative®

Tennant*True*™ *Parts and Supplies*
Hygenic® Fully Cleanable Tanks
FloorSmart ™ Integrated Cleaning System
ES ® Extended Scrub System

North America / International

331381
Rev. 09 (9-2010)

www.tennantco.com

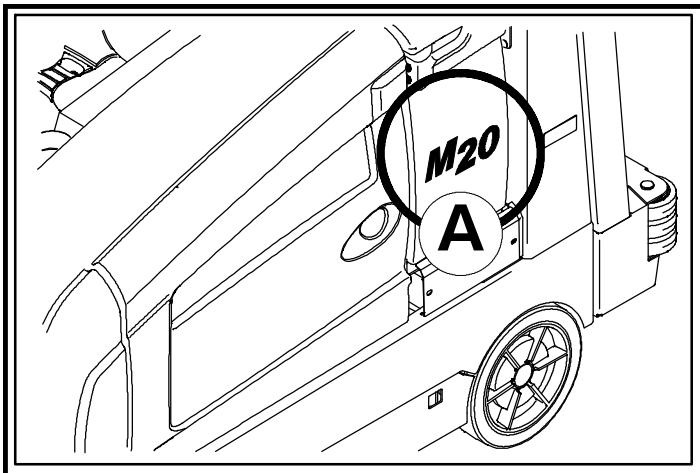

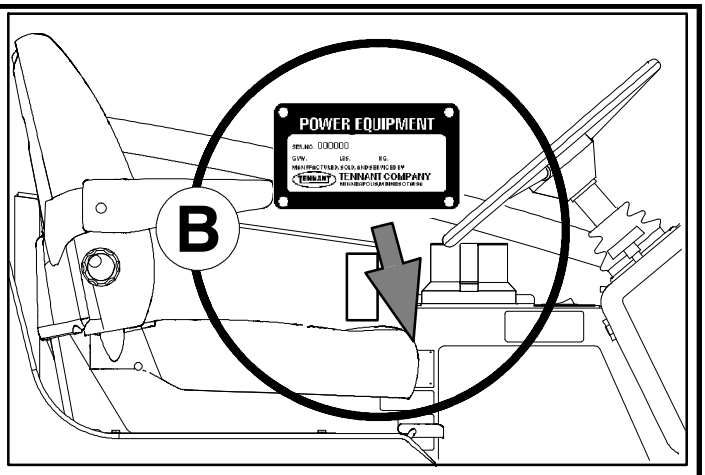

Ref	Part No.	Serial Number	Description	Qty.
1	82681	(000000–)	Bracket Wldt, Lpg Mount	1
▽ 2	63810	(000000–)	Latch Assy, Lpg Tank Mtg, W/Nut	4
▲ 3	51839	(000000–)	Nut Adjustable, Lpg Tank Mtg	2
4	49263	(000000–)	Tie, Cable	3
5	82556	(000000–001039)	Bracket, Vaporizer	1
6	54930	(000000–)	Vaporizer, LPG	1

D

C

EN

HOW TO ORDER PARTS - See diagram above

Only use TENNANT Company supplied or equivalent parts. Parts and supplies may be ordered online, by phone, by fax or by mail.

Follow the steps below to ensure prompt delivery.

1. **(A)** Identify the machine model.
2. **(B)** Identify the machine serial number from the data plate.
3. **(C)** Ensure the proper serial number is used from the parts list.
4. Identify the part number and quantity. Do not order by page or reference numbers.
5. Provide your name, company name, customer ID number, billing and shipping address, phone number and purchase order number.
6. Provide detail shipping instructions.

(D) ▽ - Identifies an assembly
▲ - Identifies parts included in assembly

Please fill out at time of installation for future reference.

Model No. - _____

Serial No. - _____

Machine Options - _____

Sales Rep. - _____

Sales Rep. phone no. - _____

Customer ID Number - _____

Installation Date - _____

Tennant Company
PO Box 1452
Minneapolis, MN 55440
Phone: (800) 553-8033 or (763) 513-2850
www.tennantco.com

Thermo-Sentry, Touch-N-Go, 1-STEP, Clean-Wedge, Variable Drain Valve, EasyOpen, Grip-N-Go, MaxPro2, Dura-Track, SmartRelease, InstantAccess, Duramer, FaST-PAK, ErgoSpace and Lower Total Cost of Ownership are US registered and unregistered trademarks of Tennant Company.

Specifications and parts are subject to change without notice.

Original Information, copyright © 2006 - 2010 TENNANT Company, Printed in U.S.A.

CN

如何订购部件 – 参见下表

仅使用 TENNANT 公司提供的或同等部件。部件和供应可以在线订购，通过电话、传真或邮件订购。
请遵循下面的步骤确保及时交付。

1. (A) 确定机器型号。
2. (B) 从数据标签确定机器序列号。
3. (C) 确保使用部件列表中的正确序列号。
4. 确定部件号和数量。
   不要按页面或参考编号订购。
5. 提供您的姓名、公司名称、客户 ID 号、付帐和送货地址、
   电话号码和采购单编号。
6. 提供详细的送货说明。

(D) ▽ – 确定组件
▲ – 确定组件中包含的组件

请在安装时填写供未来参考。

型号 – _____

序列号 – _____

机器选项 – _____

销售代表– _____

销售代表电话号码 – _____

客户 ID 编号 – _____

安装日期 – _____

ES

CÓMO SOLICITAR PIEZAS - Consulte el diagrama anterior.

Utilice sólo las piezas suministradas por TENNANT Company o piezas equivalentes. Puede solicitar las piezas a través de internet, por teléfono, por fax o por correo.

Siga los siguientes pasos para que la entrega sea rápida.

1. **(A)** Indique el modelo de máquina.
2. **(B)** Indique el número de serie de la etiqueta de datos.
3. **(C)** Asegúrese de que indica el número de serie correcto de la lista de piezas.
4. Indique la cantidad y el número de la pieza.
   No realice el pedidoindicando el número de página o el de referencia.
5. Incluya su nombre, el nombre de la empresa, el ID de cliente,
   las direcciones de envío y facturación, el número de teléfono y el número del pedido de compra.
6. Facilite instrucciones de envío.

(D) ▽ - identifica un conjunto
▲ - identifica piezas de un conjunto

Rellene estos datos cuando realice la instalación para utilizarlos como referencia en el futuro.

Nº modelo - _____

Nº serie - _____

Opciones de la máquina - _____

Vendedor - _____

Nº teléfono vendedor - _____

Nº cliente - _____

Fecha de instalación - _____

FR

COMMENT COMMANDER DES PIÈCES DÉTACHÉES - Voir le schéma ci-dessus.

Utilisez uniquement des pièces fournies par la société TENNANT ou équivalentes. Les pièces et fournitures peuvent être commandées en ligne, par téléphone, fax, ou par courrier.

Suivez les étapes ci-dessous pour assurer une livraison rapide.

1. **(A)** Identifiez le modèle de la machine.
2. **(B)** Identifiez le numéro de série de la machine, à partir de l'étiquette signalétique.
3. **(C)** Assurez-vous que le numéro de série correct est utilisé à partir de la liste de pièces détachées.
4. Identifiez le numéro de pièce et la quantité. Ne commandez pas par page ou numéros de référence.
5. Fournissez votre nom, le nom de votre société, votre numéro d'identification de client, l'adresse de facturation et d'expédition, le numéro de téléphone et le numéro du bon de commande.
6. Fournissez des instructions d'expédition détaillées.

(D) ▽ - identifie un assemblage
▲ - identifie les pièces composant l'assemblage

A remplir au moment de l'installation à titre de référence.

Nº du modèle - _____

Nº de série - _____

Options de la machine - _____

Agent commercial - _____

Nº tél. de l'agent commercial - _____

Numéro d'identification client - _____

Date d'installation - _____

JP

パーツの発注方法 ?上記の図を参照してください

TENNANT社製のパーツまたは同等品のみをお使いください。
パーツやサプライ品のご注文は、オンライン、電話、FAX、または手紙でお願いいたします。
確実にお届けできるように、以下の情報お知らせください。

1. (A) 製品のモデル名をお知らせください。
2. (B) 製品のデータラベルに印刷されているシリアル番号
   をお知らせください。
3. (C) パーツリストを参照して、シリアル番号が正しいかご確認
   ください。
4. パーツ番号と数量をお知らせください。マニュアル/カタログの
   ページ番号や参照番号でのご注文はご遠慮ください。
5. お客様のお名前、会社名、顧客ID番号、請求/発送先住所、
   電話番号、注文書番号をお知らせください。
6. 発送に関するご希望があれば、明記してください。

(D) ▽ – アセンブリを示します
▲ – アセンブリに含まれるパーツを示します

後日確認できるように、設置時に記入してください。

モデルNo. – _____

シリアルNo. – _____

製品のオプション– _____

販売代理店 – _____

販売代理店の電話番号 – _____

顧客ID番号 – _____

設置日 – _____

General Recommended Maintenance Items

	Ref.	Part No.	Serial Number	Description	Qty.
▽		9002553	(000000-)	Maint Kit, Gas, 400hr[M20/T20]	1
▲		372575	(000000-)	Sparkplug [Gm]	4
▲		369746	(000000-)	Element, Fltr, Air [Dn]	1
▲		372440	(000000-)	Filter, Fuel [Gm 1.6l/3.0l]	1
▽		9002554	(000000-003122)	Maint Kit, Lpg, 400hr[M20/T20]	1
▲		372575	(000000-003122)	Sparkplug [Gm]	4
▲		369746	(000000-003122)	Element, Fltr, Air [Dn]	1
▲		372615	(000000-003122)	Filter Kit, Fuelock, Lpg	1
▽		9007382	(003123-)	Maint Kit, 400hr [M20/T20/M30 Lpg 2010]	1
▲		372575	(003123-)	Sparkplug [Gm, 1pick=1plug]	4
▲		369746	(003123-)	Element, Fltr, Air [Dn]	1
▲		9007380	(003123-)	Filter, Fuelock,Lpg[Gm1.6l 2010]	1
▽		9002555	(000000-)	Maint Kit, Gas, 800hr[M20/T20]	1
▲		31613	(000000-)	Strainer, Hyd, 25 Gpm 100 Mesh	1
▲		25122	(000000-)	Cap, Breather, Hyd, 2.4 Ds	1
▲		1021579	(000000-)	Filter Assy [Pt4 936498]	1
▲		372440	(000000-)	Filter, Fuel [Gm 1.6l/3.0l]	1
▽		9002613	(000000-003122)	Maint Kit, Lpg, 800hr[M20/T20]	1
▲		31613	(000000-003122)	Strainer, Hyd, 25 Gpm 100 Mesh	1
▲		25122	(000000-003122)	Cap, Breather, Hyd, 2.4 Ds	1
▲		1021579	(000000-003122)	Filter Assy [Pt4 936498]	1
▲		372615	(000000-003122)	Filter Kit, Fuelock, Lpg	1
▽		9007381	(003123-)	Maint Kit, 800hr [M20/T20/M30 Lpg 2010]	1
▲		31613	(003123-)	Strainer, Hyd, 025gpm 100mesh 03psi	1
▲		25122	(003123-)	Cap, Breather, Hyd, 2.4 Ds	1
▲		1021579	(003123-)	Filter Assy, Hyd, 10mic	1
▲		9007380	(003123-)	Filter, Fuelock,Lpg[Gm1.6l 2010]	1
		371972	(000000-)	Element, Fltr, Oil, Eng, Spin-On	1
		1048295AM	(000000-)	Filter, Panl, Syn, 4.2 X 20.0 X 30.0	1
		1027290	(000000-)	Filter, Soltn, 20mesh, Pm12 3.1d 02.6l	1
		87866	(000000-)	Key, Ignition [Set Of 2]	1
		10137	(000000-)	Battery, Wet, 12vdc 0475cca	1
		20833	(000000-)	Wheel, 3.0d 1.38w 0.50b	2
		1033644	(000000-)	Belt, Ribbed, 38.5l	1
		1024586	(000000-)	Skirt, Neo, .06, 06.85w 27.95l, 08 Hole	2
		1019295	(000000-)	Skirt, Neo, .18, 10.37w 27.95l, 12 H&S	2
		1020166	(000000-)	Skirt, Neo, .06, 12.00w 45.88l, 07 Hole	1
		1022009	(000000-)	Skirt, Neo, .06, 06.38w 40.86l, 06 Hole	1
		1022007	(000000-)	Skirt, Rbr, .37, 04.50w 40.94l, 06 Hole	1
		1017868	(000000-)	Blade, Sqge, Front [Linard]	1
		1031331	(000000-)	Blade, Sqge, Rear, Linatex	1
		83874	(000000-)	Gasket, Sqge	2
		1031011	(000000-)	Blade, Sqge, 37.08l Linatex	2
		1027719	(000000-)	Blade, Sqge, Front, 49.59l Pyu	1
		1031945	(000000-)	Blade, Sqge, Rear, 53.78L Pyu	1
		1031823	(000000-)	Blade, Sqge, .38 3.55w 038.3l, Ure	2

General Recommended Maintenance Items

Ref.	Part No.	Serial Number	Description	Qty.
	1027716	(000000-003076)	Squeegee Assy, Sba, Ure	1
	1059091	(003077-)	Blade, Sqge, Side Brush, Urethane	1
	1059092	(003077-)	Blade, Sqge, Side Brush, Urethane	1
	1025005	(000000-003076)	Squeegee Assy, Sba, Linatex	1
	1046980	(003077-)	Blade, Sqge, Side Brush, Linatex	1
	1047238	(003077-)	Blade, Sqge, Side Brush, Linatex	1
	84597	(000000-)	Tire Assy, Solid, 18.0x6.0 4.5bc/5bolt	1
	16411	(000000-)	Paint, Airdry, Off-White, 12oz	1
	16412	(000000-)	Paint, Airdry, Teal, 12oz, Solid	1
	377540	(000000-)	Paint, Airdry, Blk, 12oz	1
	377538	(000000-)	Paint, Airdry, Gray, 12oz [Enamel]	1
	377537	(000000-)	Paint, Airdry, Iron Gray,12oz[Pwdr Coat]	1

SECTION 2

Contents **Page**

Fig. 1 – Brushes, Replacement, Scrub Head 2-4
Fig. 2 – Brushes, Replacement, Side Brush 2-5
Fig. 3 – Main Frame Group 2-6
Fig. 4 – Operator Station Group 2-8
Fig. 5 – Operator Station Insulation Group 2-10
Fig. 6 – Instrument Panel Group 2-12
Fig. 7 – Seat Group 2-14
Fig. 8 – Steering Group 2-16
Fig. 9 – Front Cover Group 2-18
Fig. 10 – Engine Cover Group 2-20
Fig. 11 – Engine and Mount Group 2-22
Fig. 12 – Engine EFI Group, Gasoline (000000–001999) 2-24
Fig. 13 – Engine EFI Group, Gasoline (002000–003122) 2-26
Fig. 14 – Engine EFI Group, Gasoline (003123–) 2-28
Fig. 15 – Engine EFI Group, LPG (000000–001999) 2-30
Fig. 16 – Engine EFI Group, LPG (002000–) 2-34
Fig. 17 – Engine Vaporizer Group, LPG (002000–003122) 2-36
Fig. 18 – Engine Vaporizer Group, LPG (003123–) 2-38
Fig. 19 – Engine Fuel Tank Group, Gasoline (000000–001999) 2-40
Fig. 20 – Engine Fuel Tank Group, Gasoline (002000–) 2-42
Fig. 21 – Engine Fuel Tank Group, LPG . . . 2-44
Fig. 22 – Engine Air Cleaner Group, Gasoline (000000–001999) 2-46
Fig. 23 – Engine Air Cleaner Group, Gasoline (002000–) 2-48
Fig. 24 – Engine Air Cleaner Group, LPG (000000–001999) 2-50
Fig. 25 – Engine Air Cleaner Group, LPG (002000–) 2-52
Fig. 26 – Engine Alternator and Fan Group 2-54
Fig. 27 – Engine Muffler Group (000000–001999) 2-56
Fig. 28 – Engine Muffler Group (002000–) 2-58
Fig. 29 – Engine Radiator Group (000000–003038) 2-60
Fig. 30 – Engine Radiator and Mount Group (003039–) 2-64
Fig. 31 – Engine Radiator Hose Group (003039–) . . 2-66
Fig. 32 – Battery and Electrical Group 2-68
Fig. 33 – Wheel Group, Front Drive 2-70
Fig. 34 – Wheel Group, Rear 2-72
Fig. 35 – Brake Pedal Linkage Group 2-74
Fig. 36 – Directional Pedal and Linkage Group 2-76

Contents **Page**

Fig. 37 – Hopper Lift Arms Group 2-78
Fig. 38 – Hopper and Debris Screen Group 2-80
Fig. 39 – Hopper Cover and Dust Filter Group 2-82
Fig. 40 – Hopper Bumper Group 2-84
Fig. 41 – Hopper Door Group (000000–003061) 2-86
Fig. 42 – Hopper Door Group (003062–) 2-88
Fig. 43 – Cylindrical Scrub Brush Drive Group, Left Side 2-90
Fig. 44 – Cylindrical Scrub Brush Drive Group, Right Side 2-92
Fig. 45 – Cylindrical Scrub Brush Head Lift Group 2-94
Fig. 46 – Cylindrical Brush Head Skirt Group 2-96
Fig. 47 – Squeegee Lift Group, Rear 2-98
Fig. 48 – Squeegee Group, Rear 2-100
Fig. 49 – Squeegee Linkage Group, Rear . 2-102
Fig. 50 – Squeegee Group, Right Side . . . 2-104
Fig. 51 – Squeegee Lift Group, Right Side 2-106
Fig. 52 – Squeegee Group, Left Side 2-108
Fig. 53 – Squeegee Lift Group, Left Side . 2-110
Fig. 54 – Solution Tank Group 2-112
Fig. 55 – Solution Tank Drain Group 2-116
Fig. 56 – Solution Control Group 2-118
Fig. 57 – Recovery Tank Group 2-120
Fig. 58 – Recovery Tank Drain Group 2-122
Fig. 59 – Vacuum Fan Group, Scrubbing . 2-124
Fig. 60 – Vacuum Fan Group, Sweeping . . 2-126
Fig. 61 – Hydraulic Schematic (000000–002699) 2-128
Fig. 62 – Hydraulic Schematic (002700–003297) 2-130
Fig. 63 – Hydraulic Schematic (003298–) 2-132
Fig. 64 – Hydraulic Hose Group, Steering and Propel 2-134
Fig. 65 – Hydraulic Hose Group, Pump and Vacuum Fans 2-136
Fig. 66 – Hydraulic Hose Group, Brush and Hopper 2-138
Fig. 67 – Hydraulic Hose Group, Squeegee Lift 2-140
Fig. 68 – Hydraulic Pumps Group 2-142
Fig. 69 – Hydraulic Cooler and Tubes Group 2-144
Fig. 70 – Hydraulic Reservoir Group 2-146
Fig. 71 – Hydraulic Valves Group (000000–002699) 2-148
Fig. 72 – Hydraulic Valve Group (002700–) 2-150

Contents **Page**

Fig. 73 – Electrical Schematic (000000–001999) 2-152
Fig. 74 – Electrical Schematic (002000–002532) 2-156
Fig. 75 – Electrical Schematic (002533–) 2-160
Fig. 76 – Electrical Schematic, Gas/LPG Engine Harness (000000–001999) 2-166
Fig. 77 – Electrical Schematic, Gas Engine Harness (002000–003122) 2-168
Fig. 78 – Electrical Schematic, Gas Engine Harness (003123–) 2-170
Fig. 79 – Electrical Schematic, LPG Engine Harness (002000–003122) 2-172
Fig. 80 – Electrical Schematic, LPG Engine Harness (003123–) 2-174
Fig. 81 – Electrical Wire Harnesses Group 2-176
Fig. 82 – Label Group 2-200

Fig. 1 - Brushes, Replacement, Scrub Head

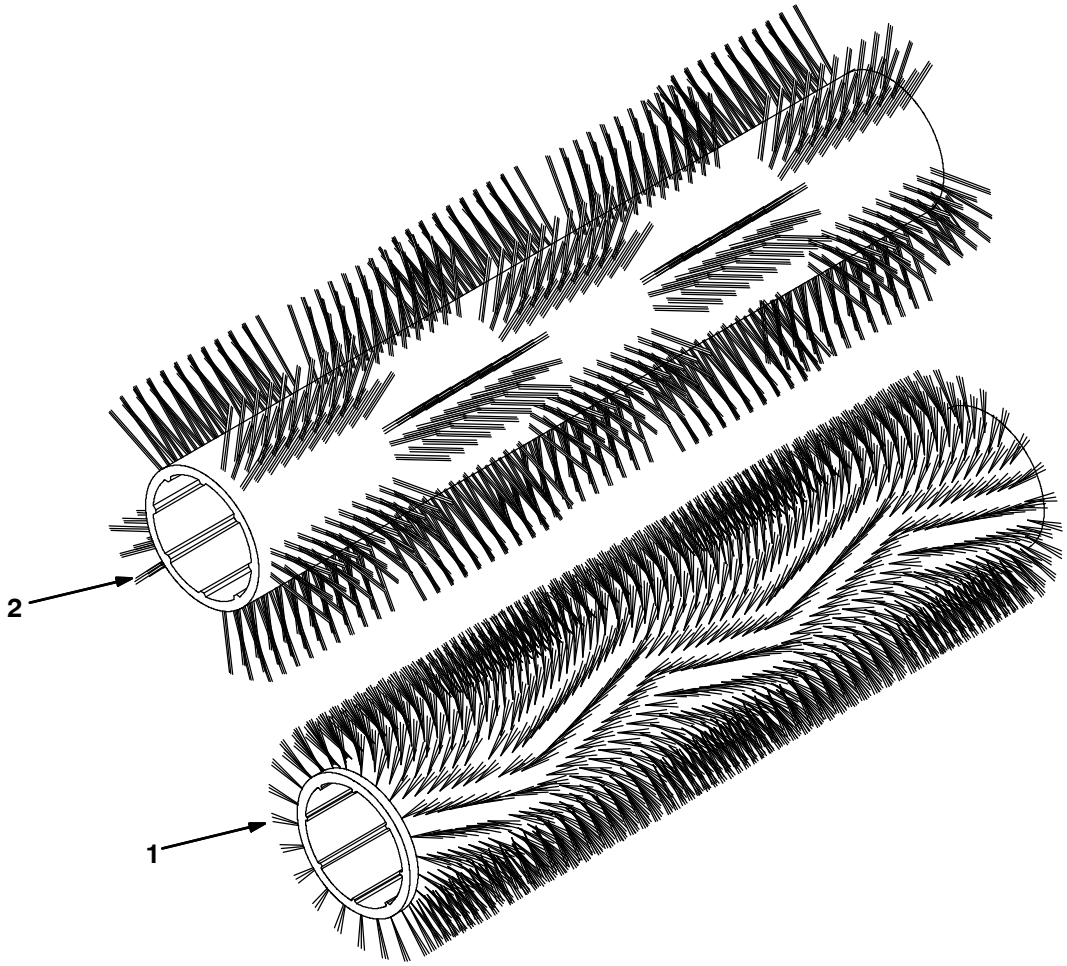

354408

Ref.	Part No.	Serial Number	Description	Qty.
1	1026223	(000000-)	Brush, Swp / Scb, 40l, Polypropylene	2
1	1026222	(000000-)	Brush, Swp / Scb, 40l, Super Abrasive	2
1	1027697	(000000-)	Brush, Swp / Scb, 40l, Polyester	2
1	1030969	(000000-)	Brush, Swp / Scb, 40l, Heavy Duty Polypropylene	2
2	1040524	(000000-)	Brush, Swp / Scb, 40l, Wndw, Polypropylene	1
2	1059640	(000000-)	Brush, Swp / Scb, 40L, Wndw, Super Abrasive	1

Fig. 2 - Brushes, Replacement, Side Brush

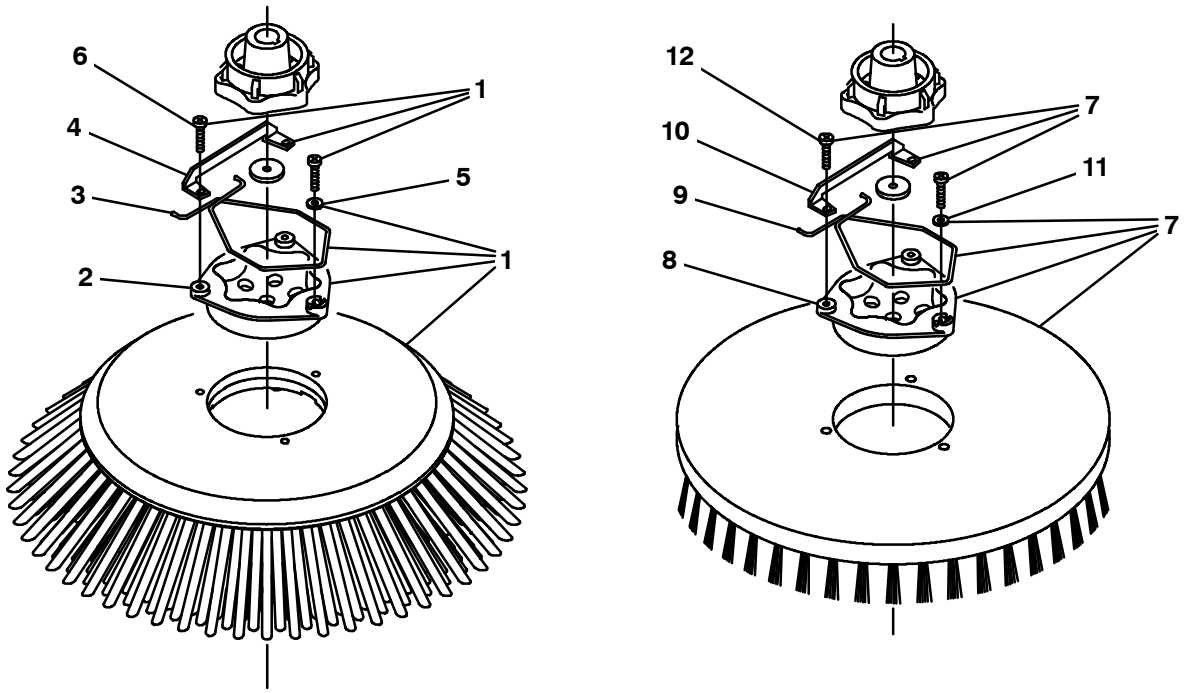

354584

	Ref.	Part No.	Serial Number	Description	Qty.
▽	1	1027688	(000000–)	Brush Assy, Disk, Swp, 24.0d, Polypropylene	1
▲	2	15539	(000000–)	Hub, Drive, Brush, Disk, 3hole 5.8bc[6t]	1
▲	3	14838	(000000–)	Spring, Wir, 0.16d, Brush Retaining	1
▲	4	24299	(000000–)	Bracket, Retainer, Spring	1
▲	5	01684	(000000–)	Washer, Flat, 0.27b 0.69d .05, Ss	1
▲	6	32746	(000000–)	Screw, Pan, Phl, M6 X 1.00 X 35, Ss	3
▽	7	1042499	(000000–)	Brush Assy, Disk, Scg, 16.0 D, Soft Nylon	1
▲	8	1017368	(000000–)	Hub, Drive, Brush, Disk, 3hole 5.8bc	1
▲	9	14838	(000000–)	Spring, Wir, 0.16d, Brush Retaining	1
▲	10	24299	(000000–)	Bracket, Retainer, Spring	1
▲	11	01684	(000000–)	Washer, Flat, 0.27b 0.69d .05, Ss	1
▲	12	32746	(000000–)	Screw, Pan, Phl, M6 X 1.00 X 35, Ss	3
▽	7	1042500	(000000–)	Brush Assy, Disk, Scg, 16.0 D, Heavy Duty Polypropylene	1
▲	8	1017368	(000000–)	Hub, Drive, Brush, Disk, 3hole 5.8bc	1
▲	9	14838	(000000–)	Spring, Wir, 0.16d, Brush Retaining	1
▲	10	24299	(000000–)	Bracket, Retainer, Spring	1
▲	11	01684	(000000–)	Washer, Flat, 0.27b 0.69d .05, Ss	1
▲	12	32746	(000000–)	Screw, Pan, Phl, M6 X 1.00 X 35, Ss	3
▽	7	1042504	(000000–)	Brush Assy, Disk, Scg, 16.0 D, Super Abrasive	1
▲	8	1017368	(000000–)	Hub, Drive, Brush, Disk, 3hole 5.8bc	1
▲	9	14838	(000000–)	Spring, Wir, 0.16d, Brush Retaining	1
▲	10	24299	(000000–)	Bracket, Retainer, Spring	1
▲	11	01684	(000000–)	Washer, Flat, 0.27b 0.69d .05, Ss	1
▲	12	32746	(000000–)	Screw, Pan, Phl, M6 X 1.00 X 35, Ss	3

Fig. 3 - Main Frame Group

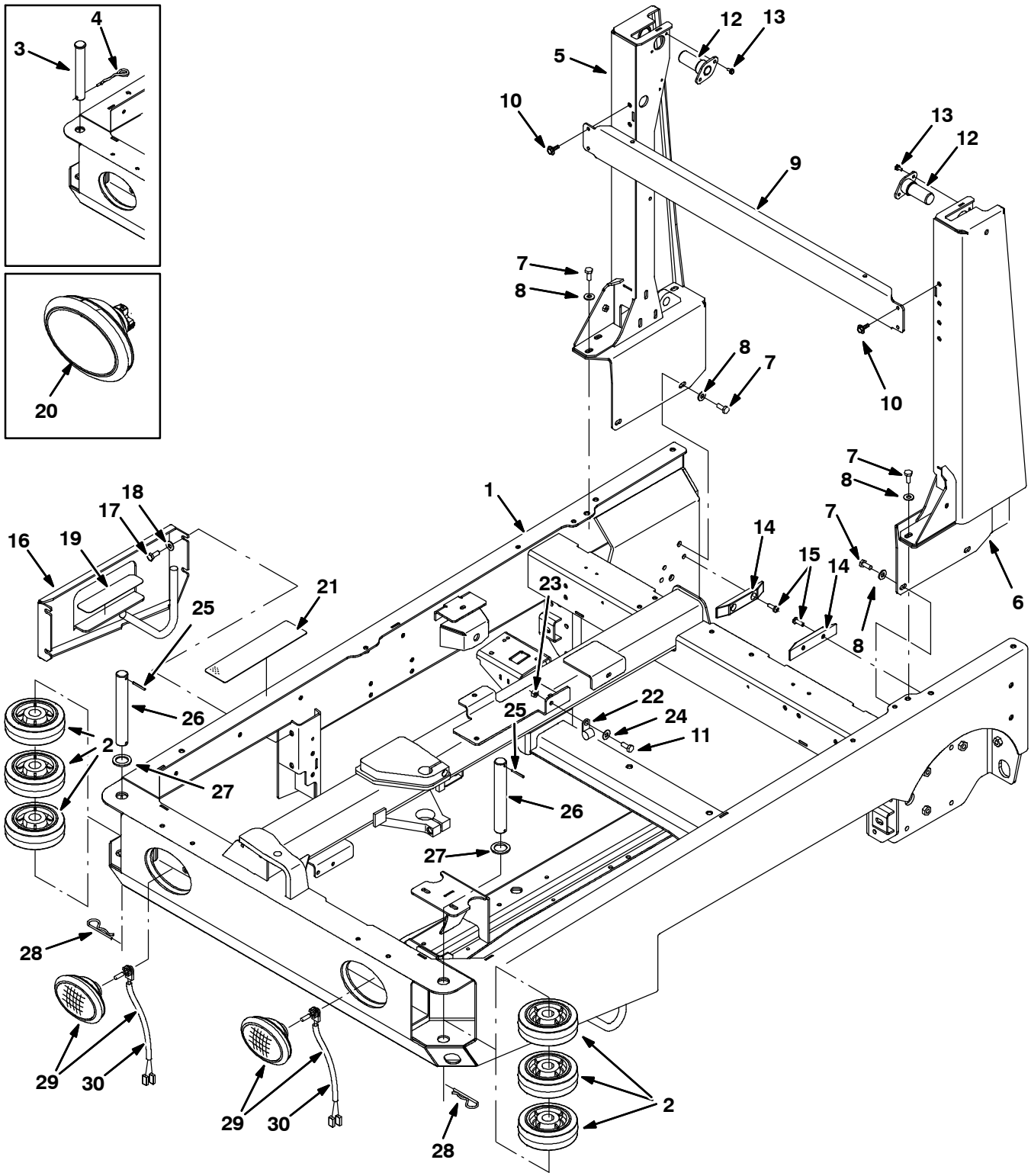

354406

Fig. 3 - Main Frame Group

	Ref.	Part No.	Serial Number	Description	Qty.
	1	9002401	(000000-)	Frame Wldt, Main, Replmt [m20 & T20]	1
	2	1060130	(000000-)	Wheel, 06.0D 2.00W 1.19B, Gray Rbr	6
	3	9006334	(000000-003062)	Pin Kit, Wheel, Ci [M20/T20/M30]	2
	4	761490	(000000-003062)	Pin, Cotter, Hair, Dbl	2
	5	9002400	(000000-)	Tower, Wldt, Lift, Rh, Replmt [M20]	1
	6	9002399	(000000-)	Tower, Wldt, Lift, Lh, Replmt [M20]	1
	7	39283	(000000-)	Screw, Hex, M10 X 1.5 X 25, 8.8	10
	8	32492	(000000-)	Washer, Flat, 0.38 Std	10
	9	1017791	(000000-)	Channel, Upper, Tower, Lift	1
	10	1037346	(000000-)	Screw, Hex, M8 X 1.25 X 25, 9.8, Sems	4
	11	39277	(001338-)	Screw, Hex, M8 X 1.25 X 25, 8.8	1
	12	1019251	(000000-)	Pin Wldt, Pivot, Hppr	2
	13	74455	(000000-)	Screw, Hex, M6 X 1.0 X 12, Fmg	4
	14	1021327	(000000-)	Block, Guide, Hppr	2
	15	367771	(000000-)	Screw, Pan, M8 X 1.25 X 25, Ss	4
	16	1027916	(000000-)	Panel Wldt, Filler	1
	17	12317	(000000-)	Screw, Hex, M10 X 1.5 X 30, Ss	4
	18	01686	(000000-)	Washer, Flat, 0.44b 1.00d .08, Ss	4
	19	363458	(000000-)	Tread, Non-Skid, 01.9w 08.0l	1
▽	20	1019225	(000000-003382)	Headlight, 12vdc, 27watt, 2.1a, Oval (Rpl by 1060942)	2
▲		1031826	(000000-003382)	Lamp, 12vdc [Speaker]	1
▲		1031827	(000000-003382)	Receptacle, Lamp [Speaker]	1
	21	58819	(000000-)	Tread, Non-Skid, 03.0w 11.6l	1
	22	53466	(001338-)	Clamp, Cable, Stl, 1.50d X 1.00w, 1hole	1
	23	08709	(001338-)	Nut, Hex, Lock, M8 X 1.25, Nl	1
	24	32491	(001338-)	Washer, Flat, 0.31, Std	1
	25	23146	(003063-)	Pin, Roll, .187d X 1.62l, .187/.192	2
	26	1053838	(003063-)	Pin, 30mmd X 215mml	2
	27	1062566	(003063-)	Washer, Flat, 1.26B 1.88D .13, Stl, Pl	2
	28	34411	(003063-)	Pin, Cotter, Hair, 1.00d .178 Wir	2
▽	29	1060942	(003383-)	Headlight, 12Vdc, Oval, Halogen	2
▲	30	9007513	(003383-)	Lamp, Halogen [Speaker]	1

Fig. 4 - Operator Station Group

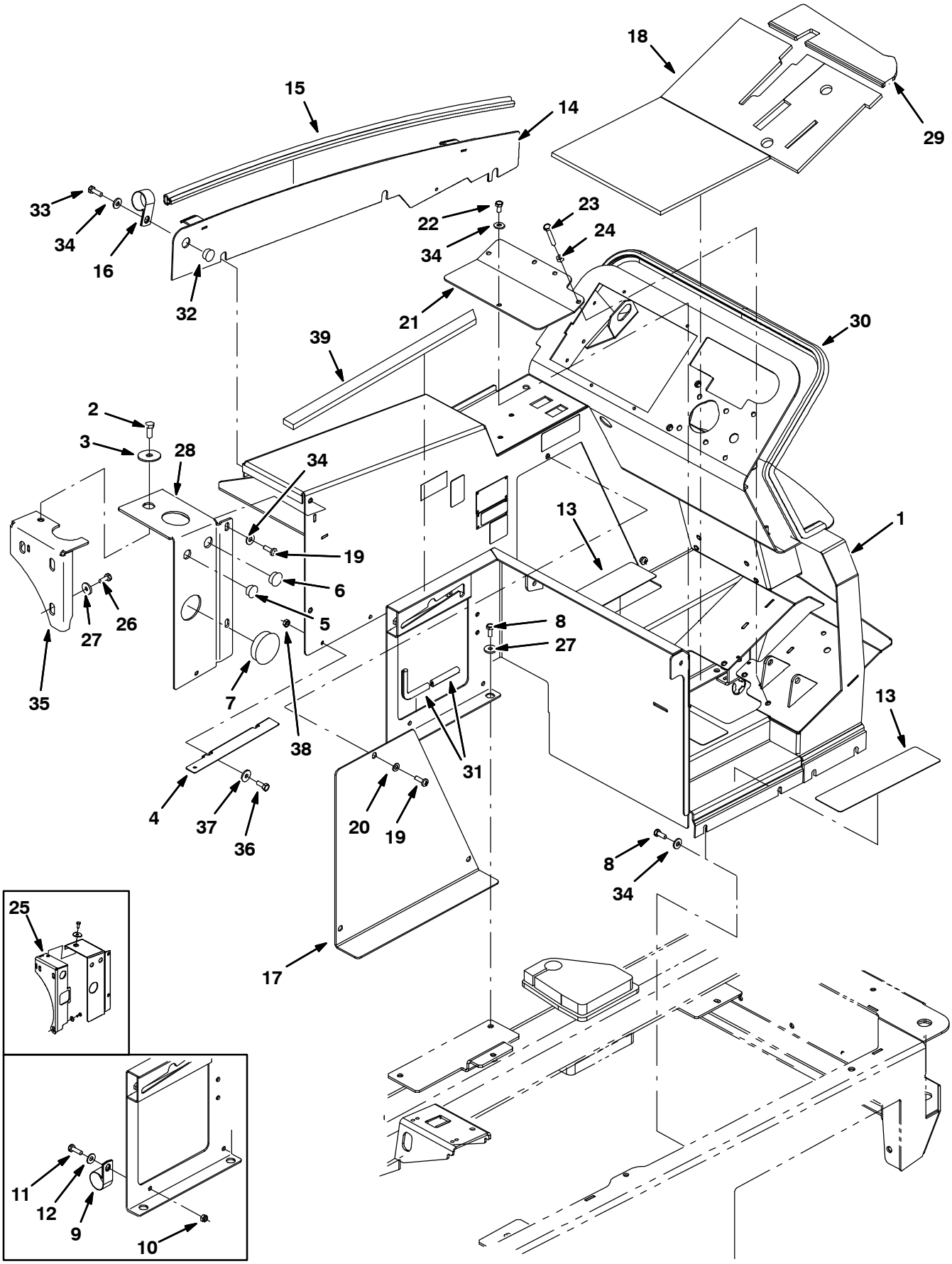

354407 - G/LP

Fig. 4 - Operator Station Group

Ref.	Part No.	Serial Number	Description	Qty.
1	9002409	(000000-)	Panel Wldt, Gas, Replmt	1
1	9002380	(000000-)	Panel Wldt, Gas, Replmt [W/Fast]	1
1	9002381	(000000-)	Panel Wldt, Gas, W/ Es, Replmt	1
1	9003422	(000000-)	Panel Wldt, Gas, Replmt, TJ (Japan only)	1
1	9003425	(000000-)	Panel Wldt, Gas, Replmt, TJ [W/Fast] (Japan only)	1
1	9003428	(000000-)	Panel Wldt, Gas, Replmt, TJ, W/Es (Japan only)	1
1	9003431	(000000-)	Panel Wldt, LPG, Replmt	1
1	9003432	(000000-)	Panel Wldt, LPG, Replmt [W/Fast]	1
1	9003433	(000000-)	Panel Wldt, LPG, Replmt, W/Es	1
1	9003423	(000000-)	Panel Wldt, LPG, Replmt, TJ (Japan only)	1
1	9003426	(000000-)	Panel Wldt, LPG, Replmt, TJ [W/Fast] (Japan only)	1
1	9003429	(000000-)	Panel Wldt, LPG, Replmt, TJ, W/Es (Japan only)	1
2	39283	(000000-)	Screw, Hex, M10 X 1.5 X 25, 8.8	1
3	04414	(000000-)	Washer, Flat, 0.53b 1.88d .12, Stl, Pl	1
4	1047169	(000000-)	Bracket, Mtg, Insulation	2
5	82727	(000000-)	Plug, Hole, Rnd, 0.88h .03-.12, Blk Nyl	1
6	01493	(000000-)	Plug, Hole, Rnd, 1.00h .03-.12, Blk Nyl	1
7	1030017	(000000-)	Plug, Hole, Rnd, 2.50h .03-.25, Blk Nyl	1
8	16931	(000000-)	Screw, Hex, M8 X 1.25 X 20, 8.8	8
9	70157	(000000-001337)	Clamp, Cable, Ss, 2.50d X 1.00w, 1h	1
10	08709	(000000-001337)	Nut, Hex, Lock, M8 X 1.25, Nl	2
11	39277	(000000-001337)	Screw, Hex, M8 X 1.25 X 25, 8.8	7
12	32491	(000000-001337)	Washer, Flat, 0.31, Std	18
13	58819	(000000-)	Tread, Non-Skid, 03.0w 11.6l	4
14	1025435	(000000-001999)	Panel Wldt, Adj	1
14	1035832	(002000-)	Panel Wldt, Adj [2007]	1
15	1030593	(000000-)	Seal, Afmkt, Bulb, 90, 0.75d F/11ga 08ft	1
16	53466	(000000-)	Clamp, Cable, Stl, 1.50d X 1.00w, 1h	5
17	1021834	(000000-)	Panel, Access, Door	1
18	1027218	(000000-)	Mat, Floor	1
19	1031665	(000000-)	Screw, Pan, M8 X 1.25 X 25, Blk	4
20	39349	(000000-)	Washer, Flat, 0.31 Sae	3
21	1022699	(000000-)	Panel, Access, Floor	1
22	16931	(000000-)	Screw, Hex, M8 X 1.25 X 20, 8.8	4
23	363976	(000000-)	Screw, Hex, M8 X 1.25 X 60, 8.8, Fl	1
24	39311	(000000-)	Nut, Hex, Std, M8 X 1.25	1
25	1020540	(000000-002412)	Bracket Wldt, Mtg, Tank	1
26	09740	(000000-)	Screw, Hex, M8 X 1.25 X 20, Ss	3
27	1017218	(000000-)	Washer, Flat, 0.32b 1.00d .12, Ss	5
28	1033975	(000000-)	Bracket, Mtg	1
29	1027267	(000000-)	Mat, Floor	1
30	1020904	(000000-)	Seal, Panl, Instmt	1
31	1020168	(000000-)	Molding, Afmkt, Trim, Pvc, .08 .11, 1ft	1
32	80288	(002000-)	Plug, Hole, Rnd, 0.81h, Blk	1
33	39277	(000000-)	Screw, Hex, M8 X 1.25 X 25, 8.8	6
34	32491	(000000-)	Washer, Flat, 0.31, Std	17
35	1035997	(002413-)	Bracket Wldt, Mtg, Tank	1
36	06942	(000000-)	Screw, Hex, M6 X 1.00 X 16, 8.8	2
37	32490	(000000-)	Washer, Flat, 0.25, Std	2
38	08708	(000000-)	Nut, Hex, Lock, M6 X 1.00, Nl	2
39	1047295	(000000-)	Seal, Foam, 0.50	1

Fig. 5 - Operator Station Insulation Group

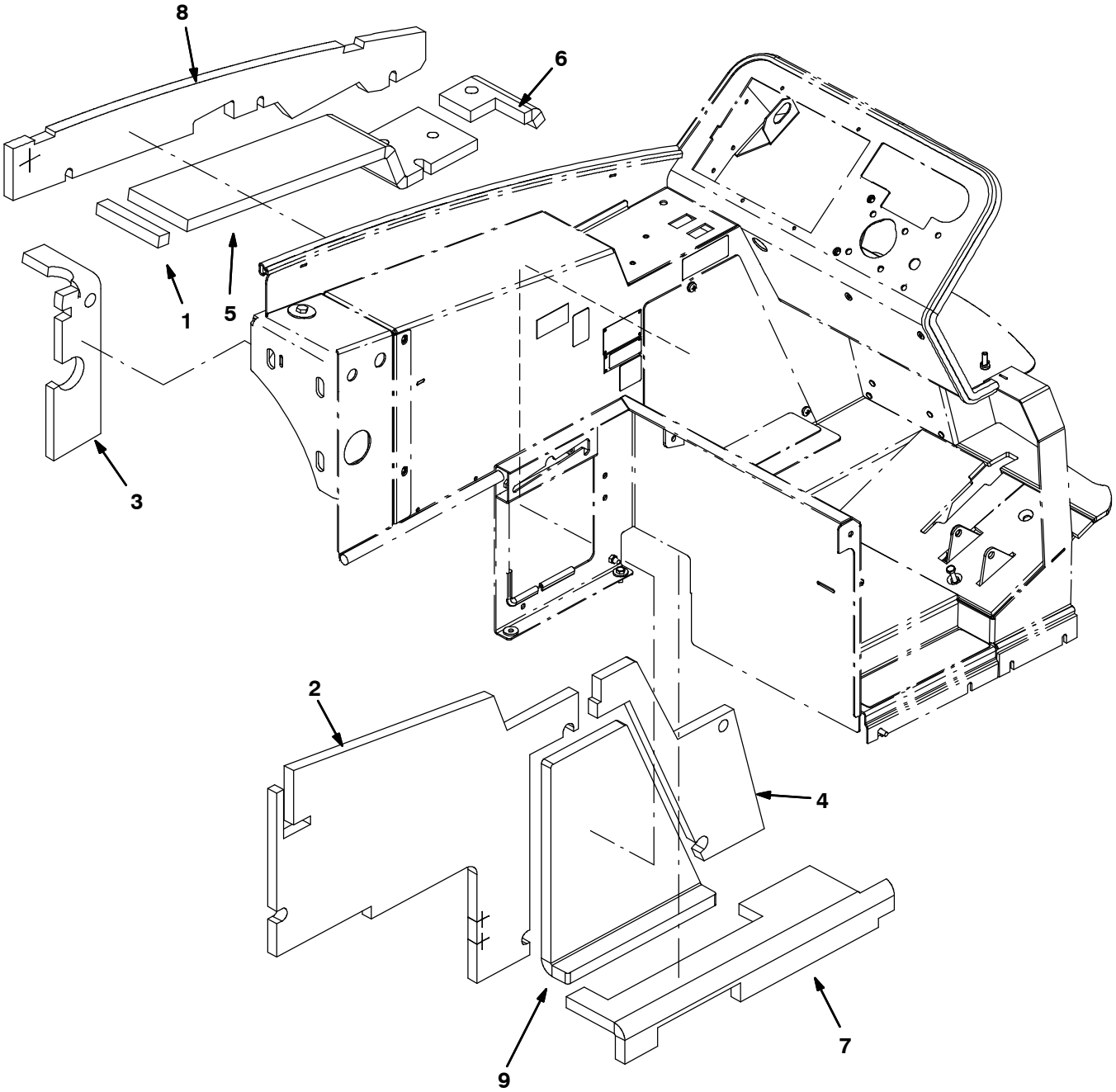

354409

Fig. 5 - Operator Station Insulation Group

Ref.	Part No.	Serial Number	Description	Qty.
1	1034769	(000000-)	Insulation, Flame-retardant, 0.75-0.88	1
2	1034765	(000000-)	Insulation, Flame-retardant, 0.75-0.88	1
3	1040841	(000000-)	Insulation, Flame-Retardant, 0.75-0.88	1
4	1023464	(000000-)	Insulation, Flame-Retardant, 0.75-0.88	1
5	1034764	(000000-)	Insulation, Flame-retardant, 0.75-0.88	1
6	1034766	(000000-)	Insulation, Flame-retardant, 0.75-0.88	1
7	1034768	(000000-)	Insulation, Flame-retardant, 0.75-0.88	1
8	1034770	(000000-)	Insulation, Flame-retardant, 0.75-0.88	1
9	1023569	(000000-)	Insulation, Flame-Retardant, 0.75-0.88	1

Fig. 6 - Instrument Panel Group

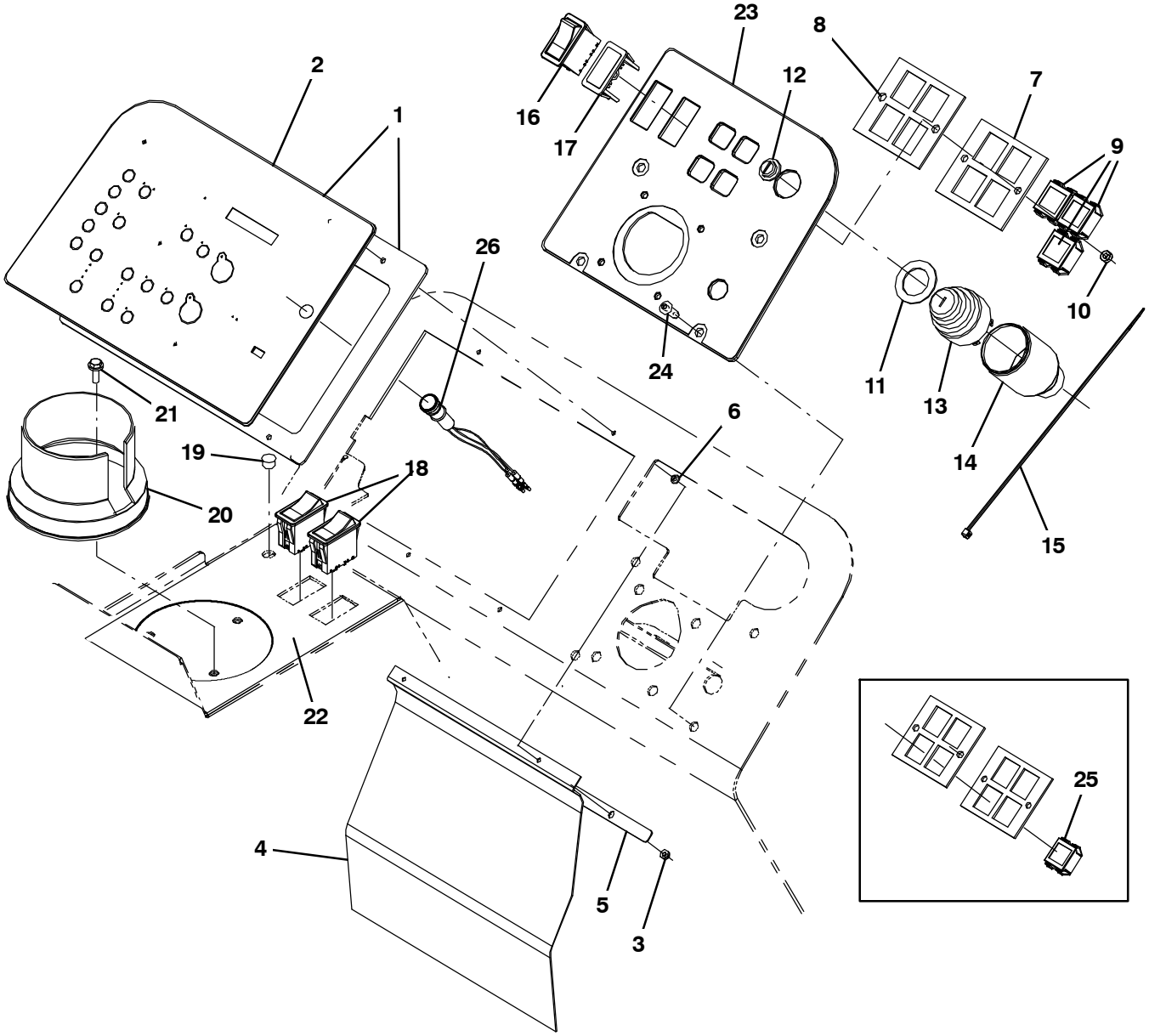

354410 - G/LP

Fig. 6 - Instrument Panel Group

	Ref.	Part No.	Serial Number	Description	Qty.
▽	1	9003453	(000000-)	Panel Kit, Instmt, Repair [M20/M30]	1
▲	2	9002435	(000000-)	Label Kit, Panel, Replmt [M20]	1
▽	1	9007912	(000000-)	Panel, Kit, Instmt, Replmt [M20/M30 ec-H20 only]	1
▲	2	9007913	(000000-)	Label Kit, Panel, Replmt [M20/M30 ec-H20 only]	1
	3	16968	(000000-)	Nut, Hex, Lock, #08-32, Nl	4
	4	1028769	(000000-)	Flap, Battery	1
	5	1028772	(000000-)	Bar, Flat, Ss, .06 X .50 X 10.0l 2/.19sl	1
	6	1029362	(000000-)	Washer, Shld, Nyl [8-32]	4
	7	361071	(000000-)	Plate, Mtg, Light	1
	8	361073	(000000-)	Seal, Rbr, Clsd, 0.13, Instmt Panl	1
	9	361075	(000000-)	Light, Panl, 14vdc, , 1.1 X 1.0	3
	10	08712	(000000-)	Nut, Hex, Lock, M6 X 1.0, Ss, Nl	2
	11	73736	(000000-)	Washer, Flat, 1.15b 1.75d .08, Stl	1
	12	382516	(000000-)	Boot, .63id .29l .90w	1
▽	13	87536	(000000-)	Switch, Ignition [Ku]	1
▲		87866	(000000-)	Key, Ignition [Set Of 2]	1
	14	383165	(000000-)	Boot, Switch, Ignition	1
	15	49266	(000000-)	Tie, Cable, Nyl, 07.3l .19w 1.8 Max D	2
	16	392171	(000000-)	Switch, Rocker, Dpdt On/Off/On	1
	17	398501	(000000-)	Plug, Hole, Rt, Rocker Switch, .87 X 1.7	1
	18	398508	(000000-)	Switch, Rocker, Dpdt Mom/Off/Mom	2
	19	56992	(000000-)	Plug, Hole, Rnd, 0.50h .03-.12, Blk Nyl	1
	20	223599	(000000-)	Cup Holder, Rwk	1
	21	1036892	(000000-)	Screw, Hex, M6 X 1.00 X 25, 9.8 Sems	3
	22	1027284	(000000-)	Label, Switch, Rocker [T20]	1
	23	9004880	(000000-)	Panel, Instmt, Rh, Gas, Replmt	1
	23	9002391	(000000-)	Panel, Instmt, Rh, Lpg, Replmt	1
	23	9002392	(000000-)	Panel, Instmt, Rh, Lpg, Replmt, Ce (Japan and CE Only)	1
	24	1031665	(000000-)	Screw, Pan, M8 X 1.25 X 25, Blk	4
	25	361075	(000000-002886)	Light, Panl, 14vdc, , 1.1 X 1.0	1
	26	1041822	(000000-)	Light, Led, .312D, 2 Volt [Tri-Color] (ec-H20 only)	1

Fig. 7 - Seat Group

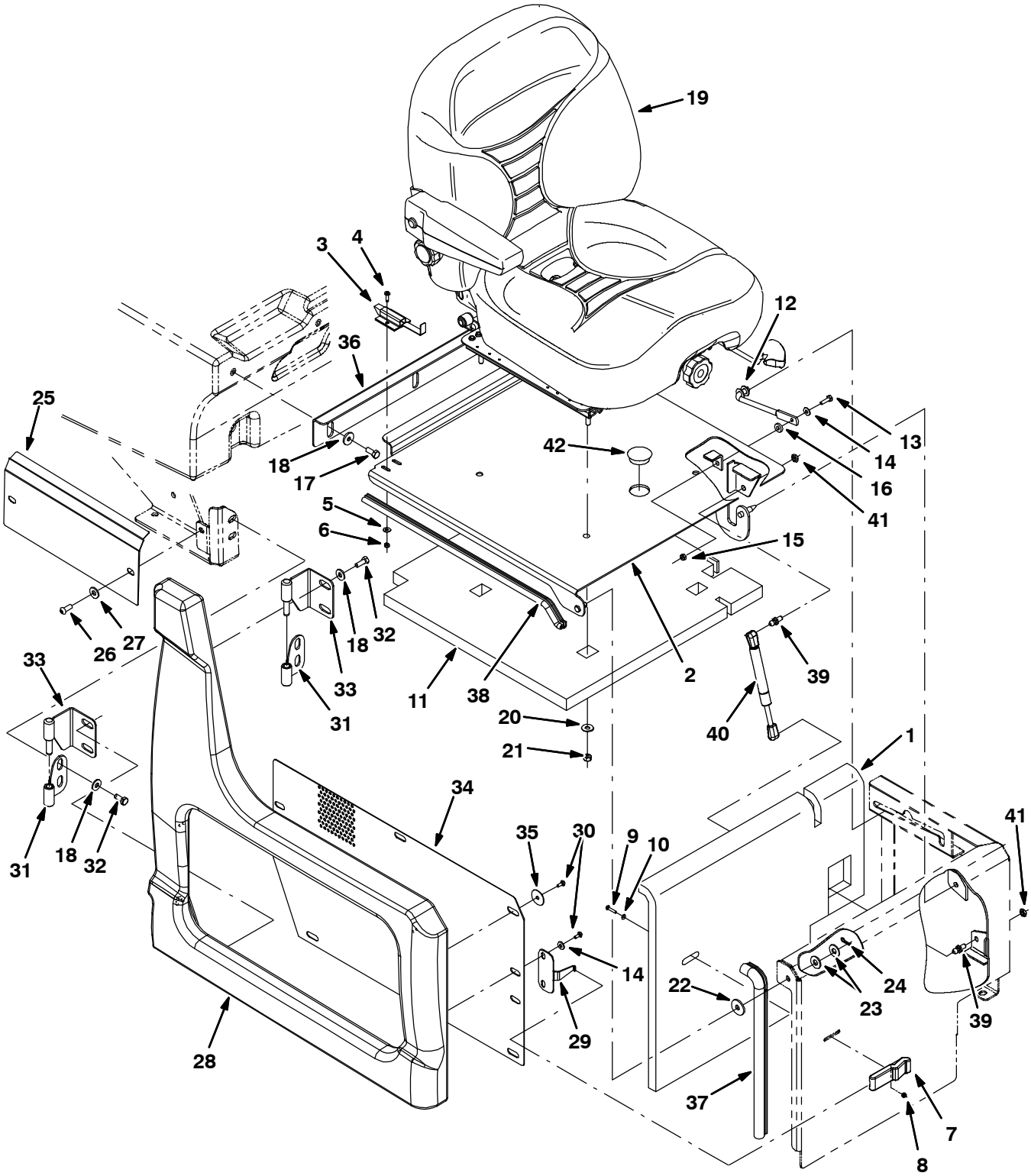

354411

Fig. 7 - Seat Group

Ref.	Part No.	Serial Number	Description	Qty.
1	1034767	(000000-)	Insulation, Flame-retardant, 0.75-0.88	1
2	1019228	(000000-)	Plate Wldt, Seat	1
3	1025736	(000000-)	Latch	1
4	09252	(000000-)	Screw, Hex, M5 X 0.8 X 20, 8.8	2
5	19066	(000000-)	Washer, Flat, #10	2
6	06549	(000000-)	Nut, Hex, Lock, M5 X 0.8, Nl	2
7	49800	(000000-)	Latch	1
8	02850	(000000-)	Nut, Hex, Lock, M4 X 0.7, Nl	4
9	06929	(000000-)	Screw, Pan, M4 X 0.7 X 25, 4.8	4
10	19065	(000000-)	Washer, Flat, #08	2
11	1023499	(000000-)	Insulation, Flame-Retardant, 1.0	1
12	223080	(000000-)	Arm Wldt, Safety, Sppt, Seat, .38d 06.5d	1
13	06943	(000000-)	Screw, Hex, M6 X 1.0 X 20, 8.8	1
14	32483	(000000-)	Washer, Flat, 0.25 Sae	9
15	08708	(000000-)	Nut, Hex, Lock, M6 X 1.0, Nl	1
16	21851	(000000-)	Spacer, Plstc, Ny	1
17	09740	(000000-)	Screw, Hex, M8 X 1.25 X 20, Ss	3
18	1017218	(000000-)	Washer, Flat, 0.32b 1.00d .12, Ss	11
19	1022105	(000000-)	Seat, Suspension, W/1 Arm And Belt	1
20	32491	(000000-)	Washer, Flat, 0.31, Std	4
21	32983	(000000-)	Nut, Hex, Lock, .31-18, Nl	4
22	364749	(000000-)	Washer, Flat, 0.41b 1.25d .12, Pye	1
23	32492	(000000-)	Washer, Flat, 0.38 Std	2
24	08085	(000000-)	Pin, Cotter, Hair, 0.31d .058 Wir	1
25	1022005	(000000-)	Cover, Lower	1
26	1031665	(000000-)	Screw, Pan, M8 X 1.25 X 25, Blk	2
27	39349	(000000-)	Washer, Flat, 0.31 Sae	2
28	1018776	(000000-)	Shroud, Seat	1
29	1026825	(000000-)	Bracket, Latch, Shrd, Seat	1
30	09200	(000000-)	Screw, Pan, M5 X 0.8 X 12, Ss	8
31	1024464	(000000-)	Hinge Wldt, Shrd, Rh	2
32	16931	(000000-)	Screw, Hex, M8 X 1.25 X 20, 8.8	8
33	1024425	(000000-)	Hinge Wldt, Shrd, Rh	2
34	1025916	(000000-)	Grill, Side	1
35	41178	(000000-)	Washer, Flat, 0.25 Fendr	6
36	1020487	(000000-)	Bracket, Seat, Adj	1
37	1030588	(000000-)	Seal, Afmkt, Bulb, 90, 0.75d F/11ga 02ft	1
38	1031206	(000000-)	Seal, Afmkt, Bulb, 90, 0.50d, 02ft	1
39	58494	(001299-)	Stud, Ball, .39d .31-16, Gasspring	2
40	368391	(001299-)	Gasspring, 180lb, 03.0strk	1
41	01760	(001299-)	Nut, Hex, Lock, .31-18, Nl, Thin	2
42	76888	(002886-)	Plug, Hole, Rnd, 1.25H .03-.12, Blk Nyl	1

Fig. 8 - Steering Group

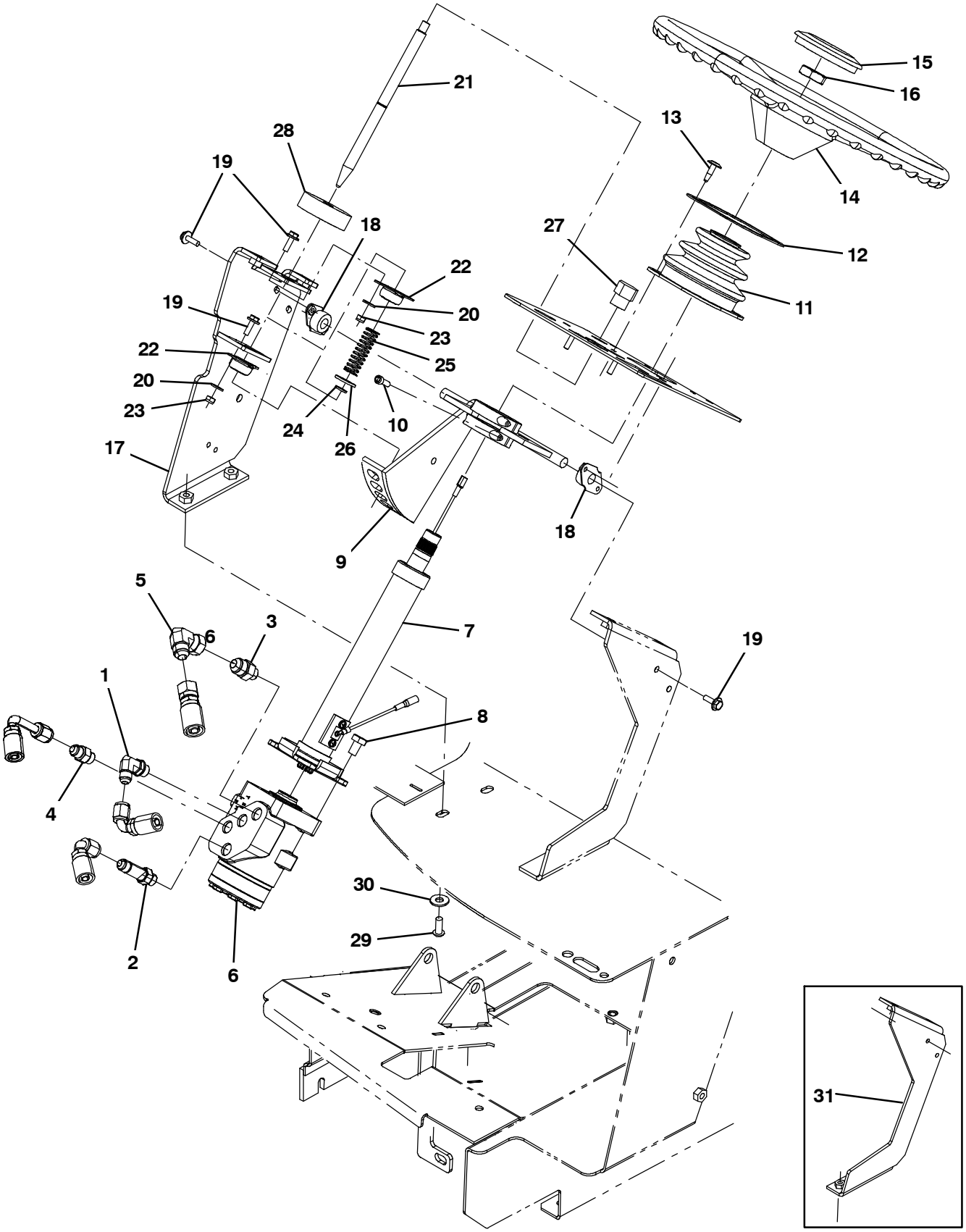

354412, M20/T20

Fig. 8 - Steering Group

	Ref.	Part No.	Serial Number	Description	Qty.
	1	56820	(000000-)	Fitting, Hyd, E90, Jm06/Om06	1
	2	59577	(000000-)	Fitting, Hyd, Str, Jm06/Om06, L	1
	3	56835	(000000-)	Fitting, Hyd, Str, Jm08/Om06	1
	4	56690	(000000-)	Fitting, Hyd, Str, Jm06/Om06	1
	5	17980	(000000-)	Fitting, Hyd, E90, Jf08/Jm08	1
	6	1024260	(000000-)	Steer-Control, Hyd#05, 06.1 2030 (See Breakdowns)	1
	7	1021265	(000000-)	Column, Steering, 09.9l 0.86d 36tooth	1
	8	06960	(000000-)	Screw, Hex, M10 X 1.5 X 16, 8.8	4
▽	9	73027	(000000-)	Bracket Wldt, Steering, Tilt	1
▲	10	01681	(000000-)	Screw, Soc, .25-20 X 0.75, Al	4
	11	70622	(000000-)	Boot, Bellows, 3.1l 4.4w 2.8h 1hole, Neo	1
	12	70623	(000000-)	Retainer, Boot, Steering Column	1
	13	72970	(000000-)	Rivet, Plstc, .250d X 0.898	4
	14	768481	(000000-)	Wheel, Steering, 14.3d 0.81b 36tooth	1
	15	1024478	(000000-)	Button, Cntrl, Horn	1
	16	56185	(000000-)	Nut, Hex, Jam, M20 X 1.5	1
	17	1024695	(000000-)	Bracket Wldt, Tilt, Rh	1
	18	70709	(000000-)	Bearing, Flng, 2-Hole, 0.50b	2
	19	1040467	(000000-)	Screw, Hex, M6 X 1.00 X 20, 9.8, Sems	8
	20	32483	(000000-)	Washer, Flat, 0.25 Sae	4
	21	1023926	(000000-)	Pin, Locking, Steering, Tilt	1
	22	47585	(000000-)	Bearing, Flng, 2hole, 0.50b [Nyl]	2
	23	08708	(000000-)	Nut, Hex, Lock, M6 X 1.0, Nl	4
	24	70717	(000000-)	Ring, Retaining, Ext, 0.50d, Hd	1
	25	22290	(000000-)	Spring, Cmpr, 18.8d, 1.6w, 57.1l	1
	26	32486	(000000-)	Washer, Flat, 0.50 Sae	1
	27	04706	(000000-)	Knob, Tee, 2.5x1.0 1.1l 0.38-16 Plstc	1
	28	75968	(000000-)	Insulation, Acstc, Rnd, 0.8, 02.5d 0.5h	1
	29	1031665	(000000-)	Screw, Pan, M8 X 1.25 X 25, Blk	2
	30	32491	(000000-)	Washer, Flat, 0.31, Std	2
	31	1024157	(000000-001052)	Bracket, Tilt, Lh	1

Fig. 9 - Front Cover Group

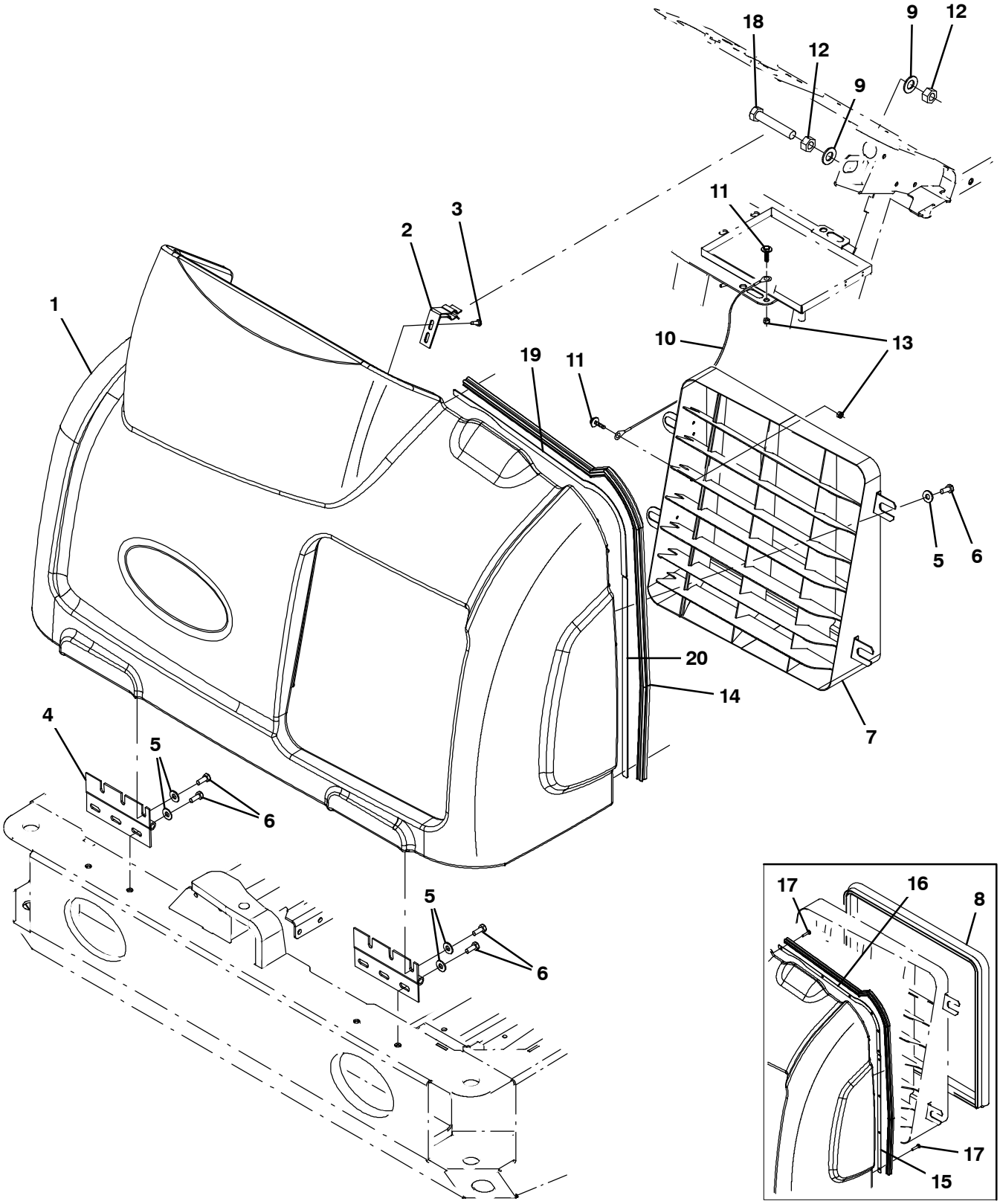

354413

Fig. 9 - Front Cover Group

Ref.	Part No.	Serial Number	Description	Qty.
1	1022069	(000000-)	Shroud, Front, Trimmed	1
2	1008916	(000000-)	Bracket Wldt, Latch	1
3	06942	(000000-)	Screw, Hex, M6 X 1.0 X 16, 8.8	2
4	71941	(000000-)	Hinge, .38pin .11 3.5w 06.0l 6/0.38sl	2
5	32491	(000000-)	Washer, Flat, 0.31, Std	14
6	16931	(000000-)	Screw, Hex, M8 X 1.25 X 20, 8.8	14
7	1035068	(000000-003038)	Grill Wldt, Front	1
7	1046090	(003039-)	Grill Wldt, Front	1
8	1031557	(000000-001277)	Seal, Afmkt, Bulb, Str, 1.0d F/11ga 08ft	1
9	15331	(000000-)	Washer, Flat, 0.62 Sae	2
10	391368	(000000-)	Cable, Glv .09d 016.5l .38eye /.38eye	1
11	1040467	(000000-)	Screw, Hex, M6 X 1.00 X 20, 9.8, Sems	2
12	07782	(000000-)	Nut, Hex, Std, M16 X 2.0	2
13	08708	(000000-)	Nut, Hex, Lock, M6 X 1.0, Nl	2
14	1049919	(000000-)	Seal, Sponge, 0.88 1.00W 43.0L	1
15	1029652	(000000-002064)	Plate, Mtg, Seal	1
16	1029545	(000000-002064)	Plate, Mtg, Seal	1
17	20394	(000000-002064)	Screw, Hex, #10-16 X 0.62, Fmg, [Ab]	10
18	06988	(000000-)	Screw, Hex, M16 X 2.0 X 90, 8.8	1
19	1037970	(002065-)	Strip Mtg, Seal	1
20	1037971	(002065-)	Strip Mtg, Seal	1

Fig. 10 - Engine Cover Group

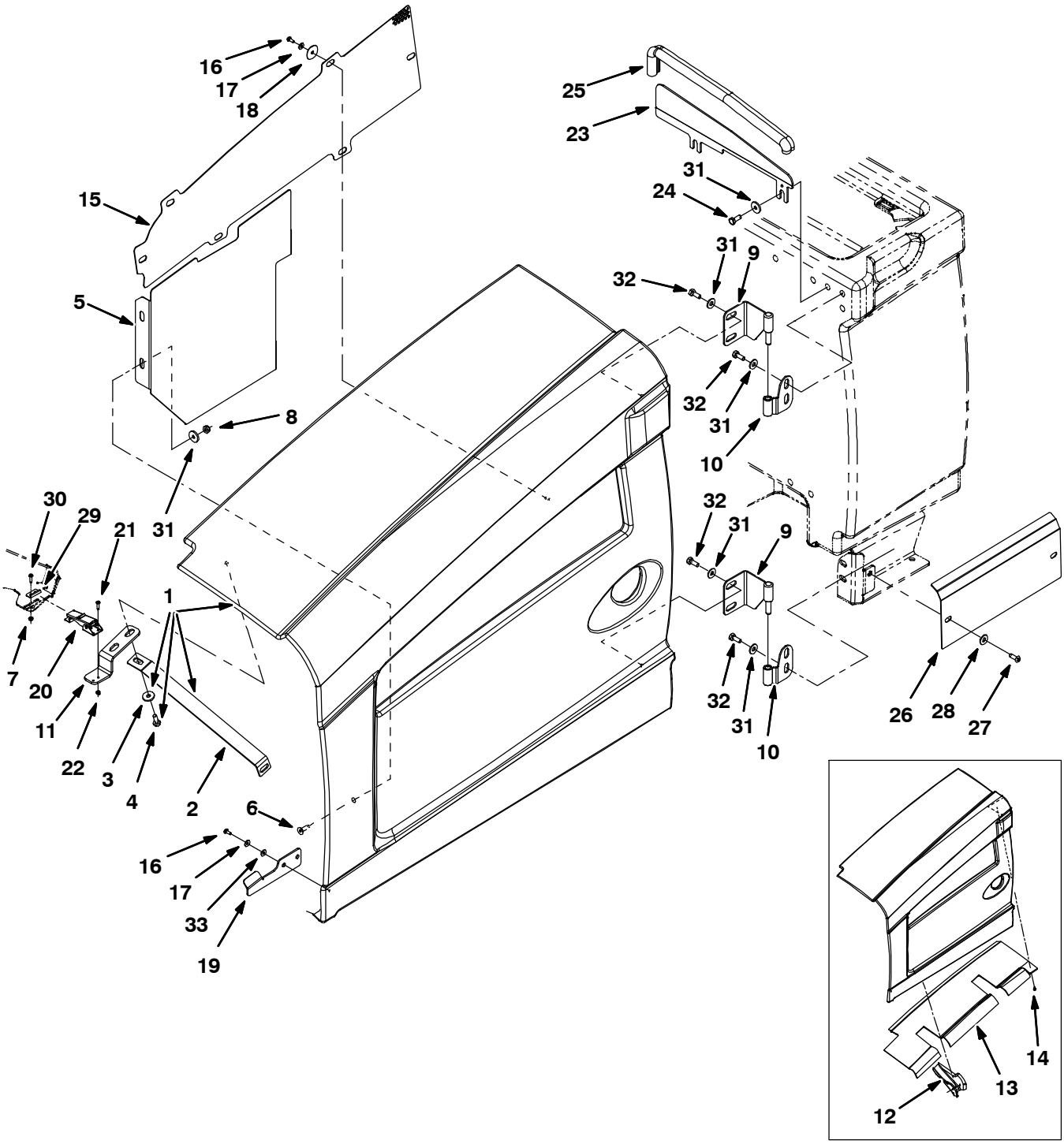

354414

Fig. 10 - Engine Cover Group

	Ref.	Part No.	Serial Number	Description	Qty.
▽	1	1033156	(000000-)	Shroud Assy, Eng	1
▲	2	1026628	(000000-)	Angle, Brace, Shrd	1
▲	3	1017218	(000000-)	Washer, Flat, 0.32b 1.00d .12, Ss	2
▲	4	16931	(000000-)	Screw, Hex, M8 X 1.25 X 20, 8.8	2
	5	1022004	(000000-)	Bracket, Shield, Heat	1
	6	74077	(000000-)	Screw, Flt, M8 X 1.25 X 25	4
	7	33932	(000000-)	Nut, Hex, Lock, M4 X 0.7, Nl, Ss	2
	8	08709	(000000-)	Nut, Hex, Lock, M8 X 1.25, Nl	4
	9	1024500	(000000-)	Hinge Wldt, Shrd, Lh	2
	10	1025196	(000000-)	Hinge Wldt, Shrd, Lh	2
	11	1020186	(000000-)	Bracket, Latch, Cover	1
	12	1028516	(000000-001327)	Insulation, Shrd, Eng, Gusset	1
	13	1026665	(000000-001327)	Insulation, Flame-Retardant, 0.5	1
	14	21168	(000000-001327)	Clip, .250h, Plstc [Pine-Tree]	14
	15	1026726	(000000-)	Grill, Eng	1
	16	09200	(000000-)	Screw, Pan, M5 X 0.8 X 12, Ss	8
	17	19066	(000000-)	Washer, Flat, #10	8
	18	41178	(000000-)	Washer, Flat, 0.25 Fendr	6
	19	1028412	(000000-)	Bracket, Guide, Shrd	1
	20	384418	(000000-)	Latch, Door [Southco 91-562-07]	1
	21	06927	(000000-)	Screw, Pan, M4 X 0.7 X 16, 4.8	2
	22	02850	(000000-)	Nut, Hex, Lock, M4 X 0.7, Nl	2
	23	1025806	(000000-)	Plate, Seal, Sound	1
	24	09740	(000000-)	Screw, Hex, M8 X 1.25 X 20, Ss	2
	25	1030588	(000000-)	Seal, Afmkt, Bulb, 90, 0.75d F/11ga 02ft	2
	26	1022005	(000000-)	Cover, Lower	1
	27	1031665	(000000-)	Screw, Pan, M8 X 1.25 X 25, Blk	2
	28	39349	(000000-)	Washer, Flat, 0.31 Sae	2
	29	384419	(000000-)	Bracket, Latch, Keeper [Southco]	1
	30	24265	(000000-)	Screw, Pan, M4 X 0.7 X 16, Ss	2
	31	1017218	(000000-)	Washer, Flat, 0.32b 1.00d .12, Ss	15
	32	16931	(000000-)	Screw, Hex, M8 X 1.25 X 20, 8.8	7
	33	41139	(000000-)	Washer, Lock, Int-Ext, 10	2

Fig. 11 - Engine and Mount Group

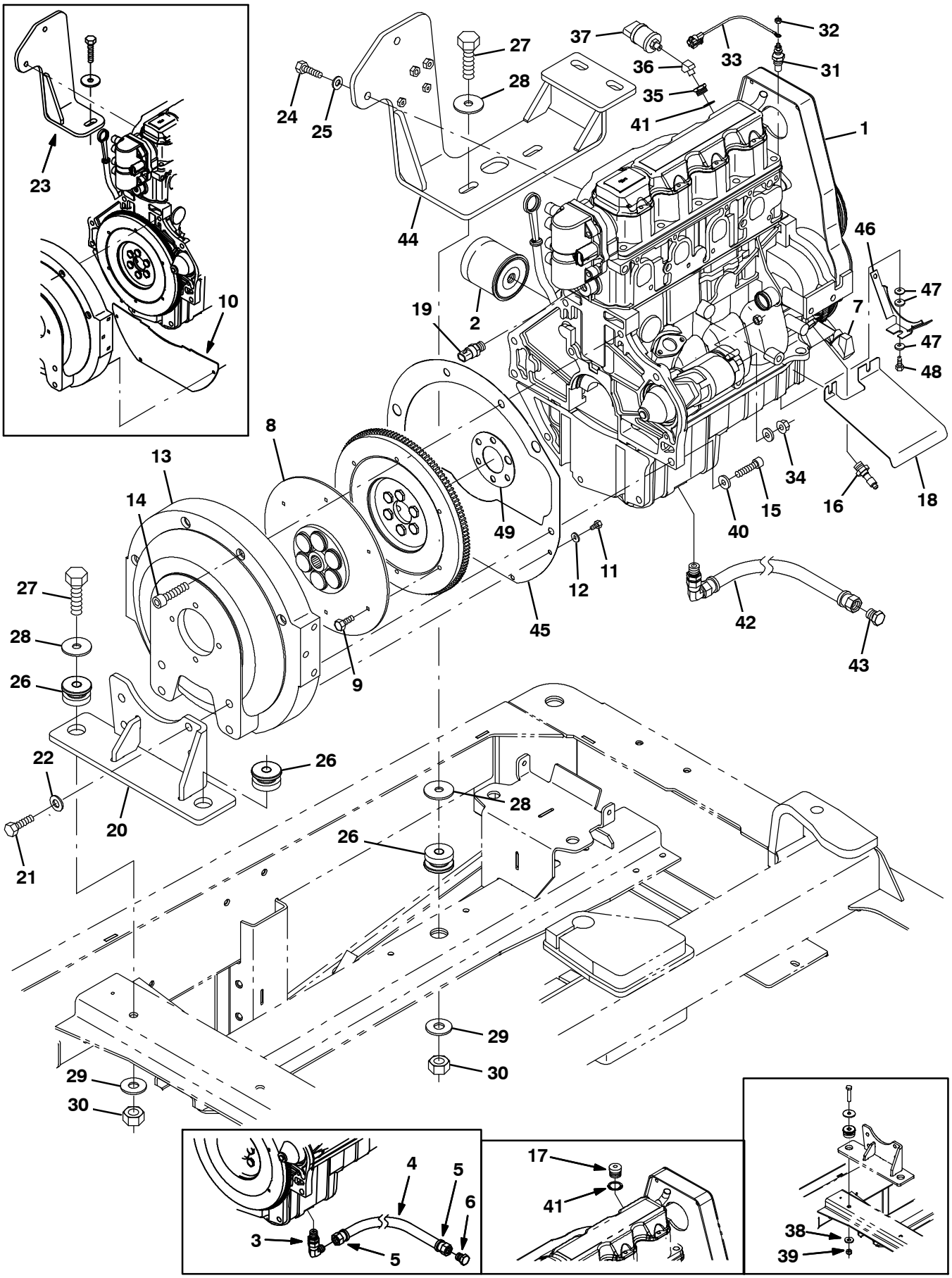

354415

Fig. 11 - Engine and Mount Group

	Ref.	Part No.	Serial Number	Description	Qty.
▽	1	372862	(000000-)	Engine [Long Block Gm 1.6l] (See Engine Breakdown)	1
▲	2	371972	(000000-)	Element, Fltr, Oil, Eng, Spin-On	1
	3	372541	(000000-001999)	Fitting, E90, M14 X .56	1
	4	371855	(000000-001999)	Hose, Hyd, 26.0l	1
	5	371876	(000000-001999)	Fitting, End, Hose	2
	6	371890	(000000-001999)	Fitting, Pipe, Plug	1
	7	372002	(000000-)	Sensor, Position, Cshft	1
	8	371866	(000000-)	Coupling, Drive, 13t	1
	9	372554	(000000-)	Screw, Hex, M07-1.00 X 23.0, 8.8	6
	10	9006895	(000000-003122)	Plate Kit, Repair	1
	11	19315	(000000-)	Screw, Hex, .25-20 X 0.50, 5	4
	12	32490	(000000-)	Washer, Flat, 0.25 Std	4
	13	371869	(000000-)	Housing, Pump	1
	14	371870	(000000-)	Screw, Soc, M12 X 1.75 X 55, 10.9	4
	15	10832	(000000-)	Screw, Soc, .38-16 X 1.50, Al	2
	16	371996	(000000-003122)	Switch, Indicator, Oil Press	1
	16	9008197	(003123-)	Switch, Indicator, Oil Press [2010]	1
	17	371860	(000000-001999)	Fitting, Pipe, Plug, Metric, M18,Soc	1
	18	372556	(000000-)	Shield, Starter [1.6l]	1
	19	372953	(000000-)	Sensor, Temp, Coolant	1
	20	1023288	(000000-)	Bracket Wldt, Mtg, Eng, Back, Gas/Lpg	1
	21	39810	(000000-)	Screw, Hex, .50-13 X 1.25, 5	4
	22	32486	(000000-)	Washer, Flat, 0.50 Sae	4
	23	1011353	(000000-003038)	Mount Wldt, Eng, Gas/Lpg	1
	24	39283	(000000-)	Screw, Hex, M10 X 1.5 X 25, 8.8	2
	25	32485	(000000-)	Washer, Flat, 0.38 Sae	2
	26	51176	(000000-)	Isolator, Vib, .50d	3
	27	06972	(000000-)	Screw, Hex, M12 X 1.75 X 60, 8.8	3
	28	04414	(000000-)	Washer, Flat, 0.53b 1.88d .12, Stl, Pl	4
	29	32493	(000000-)	Washer, Flat, 0.50 Std	3
	30	08711	(000000-)	Nut, Hex, Lock, M12 X 1.75,Nl	3
	31	1042028	(000000-)	Sensor, Temp, Water [Rework For 1.6GM]	1
	32	50335	(000000-)	Nut, Hex, Std, M5 X 0.8, 8	1
	33	1030073	(000000-)	Wire, 16ga 09.6l Brown Mp280/ #10ring	1
	34	41361	(000000-)	Nut, Hex, Std, M8 X 1.25, Brs	1
	35	1031439	(002000-)	Fitting, Pipe, Bshg, M18 X 1.5	1
	36	24976	(002000-)	Fitting, Brs, E45, Pf02/Pm02	1
	37	1055106	(002000-)	Switch, Press, 0006psi Dpdt	1
	38	32493	(000000-001337)	Washer, Flat, 0.50, Std	2
	39	08711	(000000-001337)	Nut, Hex, Lock, M12 X 1.75,Nl	2
	40	371877	(000000-)	Washer, Flat, 0.38, Hardened	2
	41	385029	(000000-)	Gasket, Plug, Relief Valve,Oil Press	1
	42	9006634	(002000-)	Hose, Drain, Eng Oil	1
	43	9006635	(002000-)	Fitting, Plug	1
	44	1046022	(003039-)	Bracket Wldt, Mtg, Eng	1
	45	1057036	(003123-)	Plate, Ring, Starter [Gm1.6l]	1
	46	1056566	(003086-)	Plate, Guard, Belt [Gm 1.6l]	1
	47	32490	(003086-)	Washer, Flat, 0.25, Std	3
	48	06943	(003086-)	Screw, Hex, M6 X 1.00 X 20, 8.8	1
	49	1057052	(003123-)	Spacer, 41.0mmb X 85.0mmd X 18ga	1

Fig. 12 - Engine EFI Group, Gasoline (000000-001999)

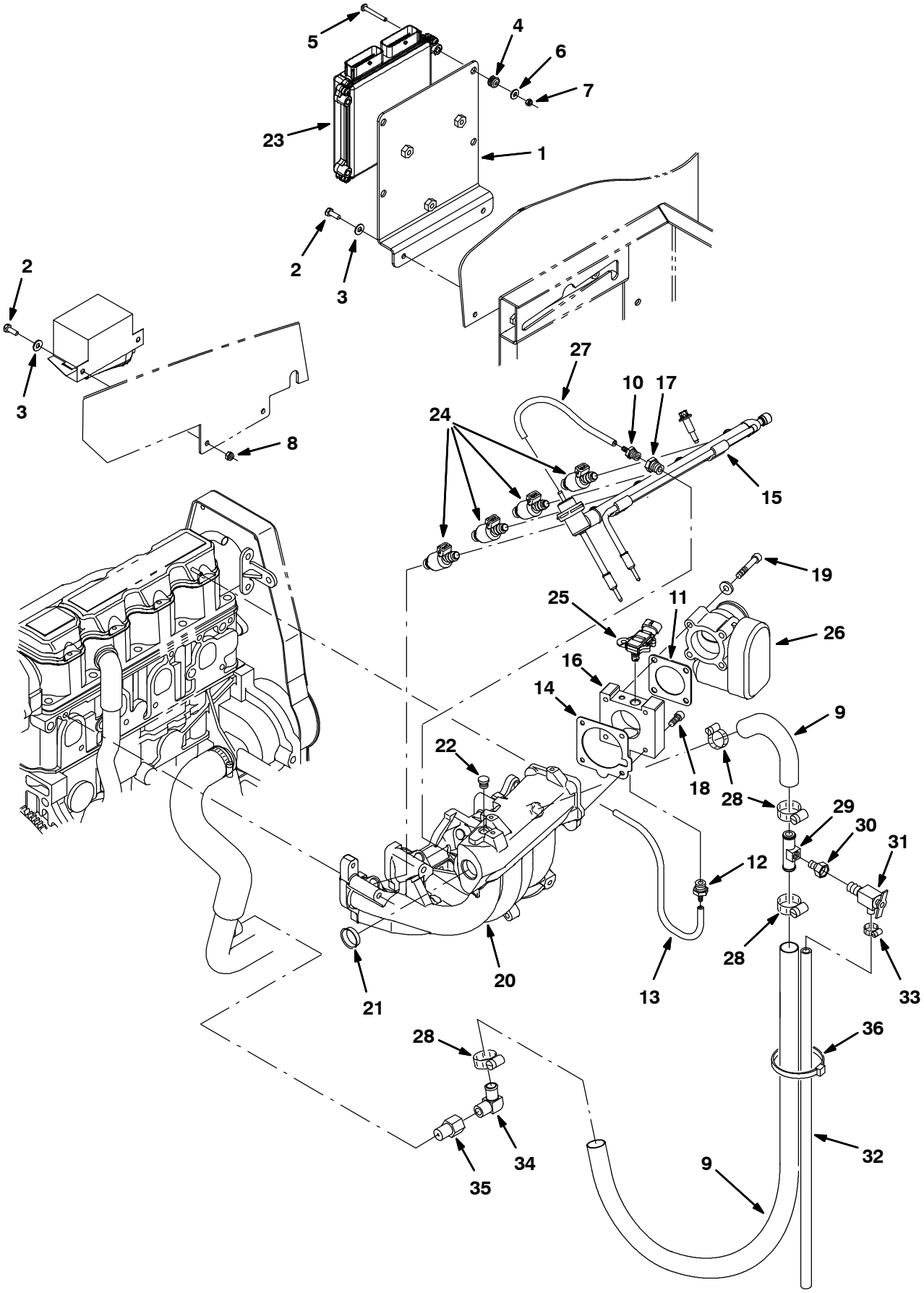

354416

Fig. 12 - Engine EFI Group, Gasoline (000000-001999)

Ref.	Part No.	Serial Number	Description	Qty.
1	1018939	(000000-001999)	Bracket, Mtg [Ecu]	1
2	06942	(000000-001999)	Screw, Hex, M6 X 1.0 X 16, 8.8	4
3	32483	(000000-001999)	Washer, Flat, 0.25 Sae	4
4	46314	(000000-001999)	Grommet, Rbr, 0.20id, F/0.4h, .12 Matl	4
5	06938	(000000-001999)	Screw, Pan, M5 X 0.8 X 40, 4.8	4
6	01683	(000000-001999)	Washer, Flat, #10, Ss	8
7	06549	(000000-001999)	Nut, Hex, Lock, M5 X 0.8, Nl	4
8	08708	(000000-001999)	Nut, Hex, Lock, M6 X 1.0, Nl	2
9	1022364	(000000-001999)	Hose, Heater	1
10	372542	(000000-001999)	Fitting, Str, .19brb X .12mpt	1
11	372545	(000000-001999)	Qd36Gasket, Body, Throttle [1.6l]	1
12	372543	(000000-001999)	Fitting, Vacuum [M16-15-6h]	1
13	372489	(000000-001999)	Hose, 9.5mm X 450mm [Pcv]	1
14	372544	(000000-001999)	Gasket, Manifold, Intake	1
15	372566	(000000-001999)	Rail, Injector, Gas, W/ Press Reg	1
16	372534	(000000-001999)	Adapter, Intake, Throttle Body	1
17	372537	(000000-001999)	Bushing, M06-1.50 X .25-27npt	1
18	06532	(000000-001999)	Screw, Soc, M6 X 1.0 X 25, 12.9	4
19	07255	(000000-001999)	Screw, Soc, M6 X 1.0 X 45, 12.9	4
20	372547	(000000-001999)	Manifold, Intake [1.6l]	1
21	372549	(000000-001999)	Plug, Manifold, Intake	1
22	372550	(000000-001999)	Plug, Port, Sensor [Map]	1
23	372858	(000000-001999)	Module, Ecu, Gas [Gm 1.6l]	1
24	372563	(000000-001999)	Injector Kit, Fuel, Gas	4
25	372493	(000000-001999)	Sensor [Tmap]	1
26	372486	(000000-001999)	Injector Kit, Fuel, Gas	1
27	372546	(000000-001999)	Hose, Fuel, .19	1
28	63810	(000000-001999)	Clamp, Hose, Wormdrive, 0.56-1.06d, .56w	4
29	83578	(000000-001999)	Tube, Air Bleed, .62d 2.2l .12npt Alm	1
30	1015930	(000000-001999)	Fitting, Brs, Str, Pf04/Pm02	1
31	51305	(000000-001999)	Fitting, Draincock, E90, .25npt	1
32	73471	(000000-001999)	Hose, Pvc, Clr, 0.38id 0.56od 22.00l	1
33	43844	(000000-001999)	Clamp, Hose, Wormdrive, 0.25-0.62d, .31w	1
34	51839	(000000-001999)	Fitting, Brs, E90, Em10/Pm06	1
35	1015547	(000000-001999)	Fitting, Adapter, Orifice, Pf06/Pm06	1
36	49266	(000000-001999)	Tie, Cable, Nyl, 07.3l .19w 1.8 Max D	1

Fig. 13 - Engine EFI Group, Gasoline (002000-003122)

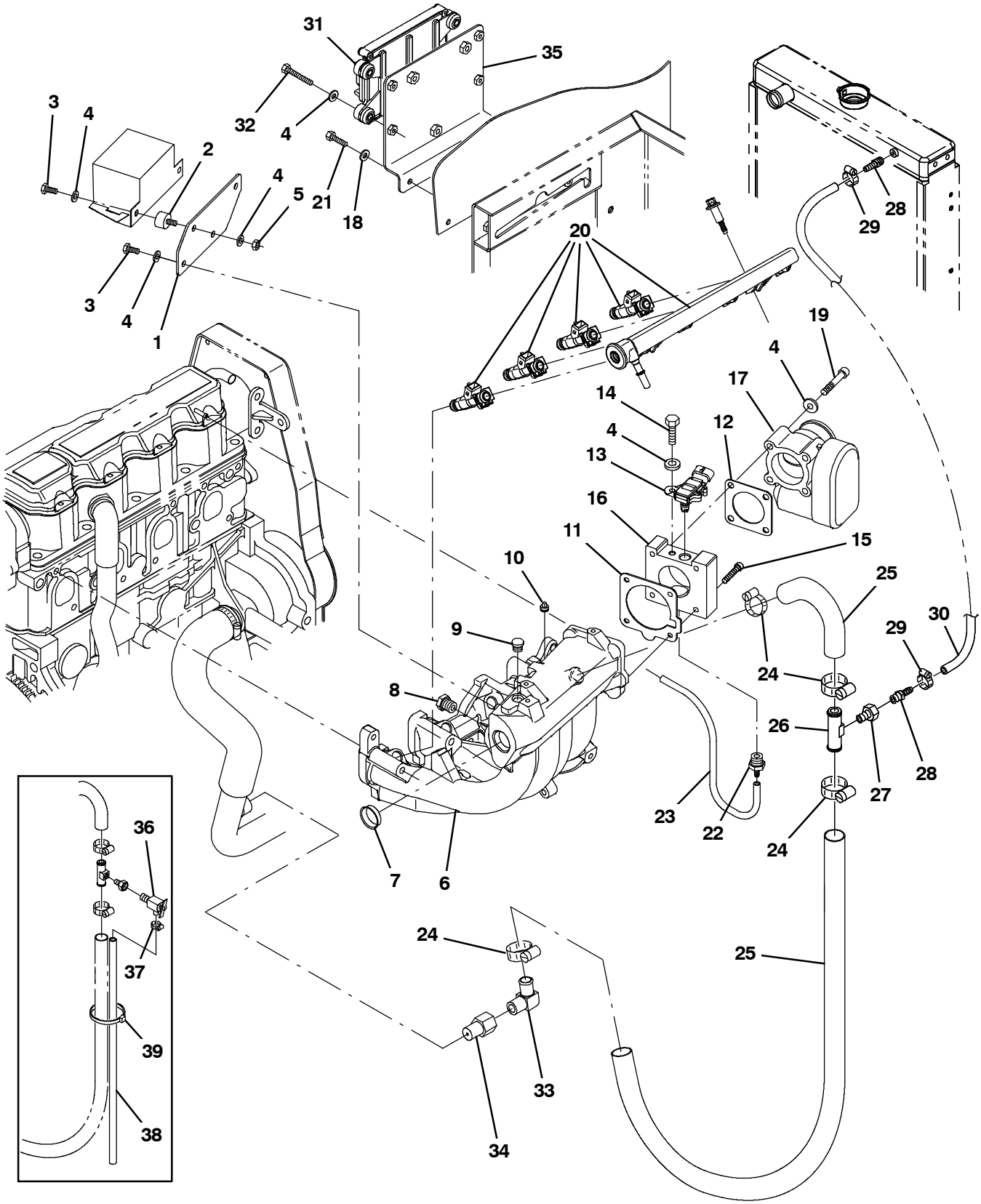

354416

Fig. 13 - Engine EFI Group, Gasoline (002000-003122)

	Ref.	Part No.	Serial Number	Description	Qty.
	1	1031312	(002000-003122)	Plate, Mtg, Relay	1
	2	372470	(002000-003122)	Isolator, Box, Relay	2
	3	19315	(002000-003122)	Screw, Hex, .25-20 X 0.50, G5	4
	4	32490	(002000-003122)	Washer, Flat, 0.25, Std	13
	5	19312	(002000-003122)	Nut, Hex, Std, .25-20	2
	6	372547	(002000-003122)	Manifold, Intake [1.6l]	1
	7	372549	(002000-003122)	Plug, Manifold, Intake	1
	8	384995	(002000-003122)	Fitting, Plug, M16, Intake Manifold	1
	9	372550	(002000-003122)	Plug, Port, Sensor [Map]	1
	10	372548	(002000-003122)	Plug, .12npt, Ss	1
▽		9003390	(002000-003122)	Gasket Kit, Repair, Gas [Gm1.6l 2007]	1
▲	11	372544	(002000-003122)	Gasket, Manifold, Intake	1
▲	12	372545	(002000-003122)	Gasket, Body, Throttle [1.6l]	1
	13	384985	(002000-003122)	Sensor [T Map]	1
	14	19317	(002000-003122)	Screw, Hex, .25-20 X 0.75, G5	1
	15	06532	(002000-003122)	Screw, Soc, M6 X 1.00 X 25, 12.9	4
	16	372534	(002000-003122)	Adapter, Intake, Throttle Body	1
	17	384974	(002000-003122)	Housing, Throttle, 40mm [Bosch]	1
	18	32483	(002000-003122)	Washer, Flat, 0.25, Sae	2
	19	07255	(002000-003122)	Screw, Soc, M6 X 1.00 X 45, 12.9	4
	20	384992	(002000-003122)	Rail, Injector, Fuel, Plstc	1
	21	06942	(002000-003122)	Screw, Hex, M6 X 1.00 X 16, 8.8	2
	22	372543	(002000-003122)	Fitting, Vacuum [M16-15-6h]	1
	23	384972	(002000-003122)	Hose, Vacuum, 0.22id X 03.0l	1
	24	63810	(002000-003122)	Clamp, Hose, Wormdrive, 0.56-1.06d, .56w	4
	25	1022364	(002000-003122)	Hose, Heater	1
	26	83578	(002000-003122)	Tube, Bleed, Air, .62od 2.2l .12npt, Alm	1
	27	1015930	(002000-003122)	Fitting, Brs, Str, Pf04/Pm02	2
	28	150516	(002493-003122)	Fitting, Brs, Str, Bm06/Pm05	2
	29	54333	(002493-003122)	Clamp, Hose, Wormdrive, 0.31-0.88d, .31w	2
	30	1043481	(002493-003122)	Hose, Heater, 0.38ID	1
	31	1028711	(002000-003122)	Module, Ecu, Gas [Gm1.6l 2700]	1
	32	06946	(002000-003122)	Screw, Hex, M6 X 1.00 X 35, 8.8	4
	33	51839	(002000-003122)	Fitting, Brs, E90, Em10/Pm06	1
	34	1015547	(002000-003122)	Fitting, Adapter, Orifice, Pf06/Pm06	1
	35	1029082	(002000-003122)	Bracket, Mtg, Ecu [M20/T20 2007]	1
	36	51305	(002000-002492)	Fitting, Draincock, E90, .25npt	1
	37	43844	(002000-002492)	Clamp, Hose, Wormdrive, 0.25-0.62d, .31w	1
	38	73471	(002000-002492)	Hose, Pvc, Clr, 0.38id 0.56od 022.0l	1
	39	49266	(002000-002492)	Tie, Cable, Nyl, 07.3l .19w 1.8 Max D	1

Fig. 14 - Engine EFI Group, Gasoline (003123-)

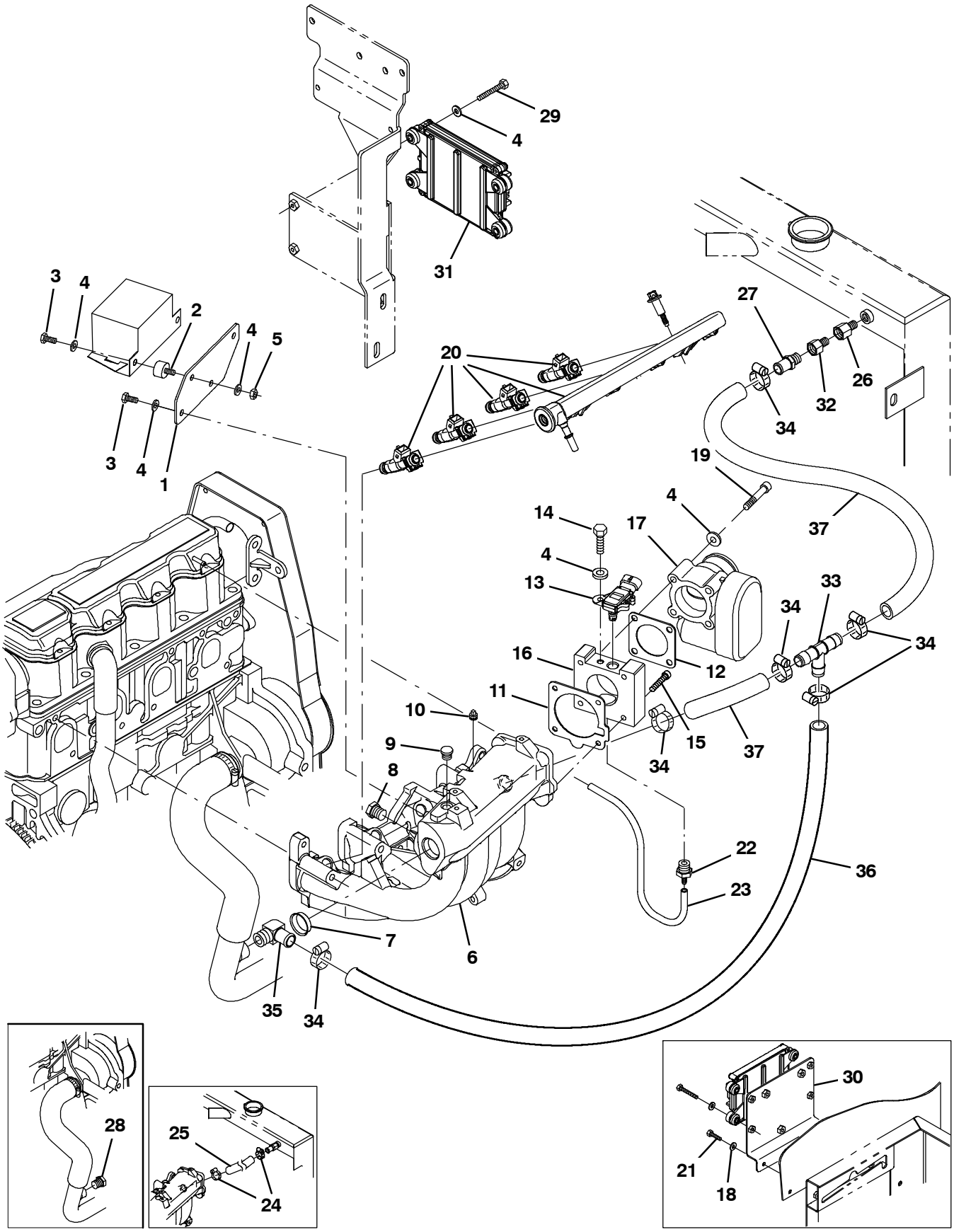

354416

Fig. 14 - Engine EFI Group, Gasoline (003123-)

	Ref.	Part No.	Serial Number	Description	Qty.
	1	1031312	(003123-)	Plate, Mtg, Relay	1
	2	372470	(003123-)	Isolator, Box, Relay	2
	3	19315	(003123-)	Screw, Hex, .25-20 X 0.50, G5	4
	4	32490	(003123-)	Washer, Flat, 0.25, Std	13
	5	19312	(003123-)	Nut, Hex, Std, .25-20	2
	6	372547	(003123-)	Manifold, Intake [1.6l]	1
	7	372549	(003123-)	Plug, Manifold, Intake	1
	8	384995	(003123-)	Fitting, Plug, M16, Intake Manifold	1
	9	372550	(003123-)	Plug, Port, Sensor [Map]	1
	10	372548	(003123-)	Plug, .12npt, Ss	1
▽		9003390	(003123-)	Gasket Kit, Repair, Gas [Gm1.6l 2007]	1
▲	11	372544	(003123-)	Gasket, Manifold, Intake	1
▲	12	372545	(003123-)	Gasket, Body, Throttle [1.6l]	1
	13	384985	(003123-)	Sensor [T Map]	1
	14	19317	(003123-)	Screw, Hex, .25-20 X 0.75, G5	1
	15	06532	(003123-)	Screw, Soc, M6 X 1.00 X 25, 12.9	4
	16	9006619	(003123-)	Adapter [E100 Mixer Gm 1.6l 2010]	1
	17	384974	(003123-)	Housing, Throttle, 40mm [Bosch]	1
	18	32483	(003123-003170)	Washer, Flat, 0.25, Sae	2
	19	07255	(003123-)	Screw, Soc, M6 X 1.00 X 45, 12.9	4
	20	384992	(003123-)	Rail, Injector, Fuel, Plstc	1
	21	06942	(003123-003170)	Screw, Hex, M6 X 1.00 X 16, 8.8	2
	22	372543	(003123-)	Fitting, Vacuum [M16-15-6h]	1
	23	384972	(003123-)	Hose, Vacuum, 0.22id X 03.0l	1
	24	63810	(003123-003268)	Clamp, Hose, Wormdrive, 0.56-1.06d, .56w	2
	25	61869	(003123-003268)	Hose, Heater, 0.62id, 024.0l	1
	26	1042772	(003123-)	Fitting, Brs, Str, Pf06/Pm04	1
	27	27767	(003123-)	Fitting, Brs, Str, Em10/Pm06	1
	28	762282	(003123-003268)	Fitting, Hyd, Plug, Pm06	1
	29	06946	(003123-)	Screw, Hex, M6 X 1.00 X 35, 8.8	4
	30	1029082	(003123-003170)	Bracket, Mtg, Ecu [M20/T20 2007]	1
	31	1056232	(003123-)	Module, Ecu, Gas [Gm1.6l 2010]	1
	32	1015547	(003123-)	Fitting, Adapter, Orifice, Pf06/Pm06	1
	33	1062116	(003269-)	Fitting, Plstc, Tee, Bm10/Bm10/Bm10	1
	34	63810	(003269-)	Clamp, Hose, Wormdrive, 0.56-1.06d, .56w	7
	35	51839	(003269-)	Fitting, Brs, E90, Em10/Pm06	1
	36	1016560	(003269-)	Hose, Afmkt, Rbr, Heater, 0.62id, 02ft	1
	37	1015897	(003269-)	Hose, Radiator, Mold, .75Id X .62Id (Cut in two)	1

Fig. 15 - Engine EFI Group, LPG (000000-001999)

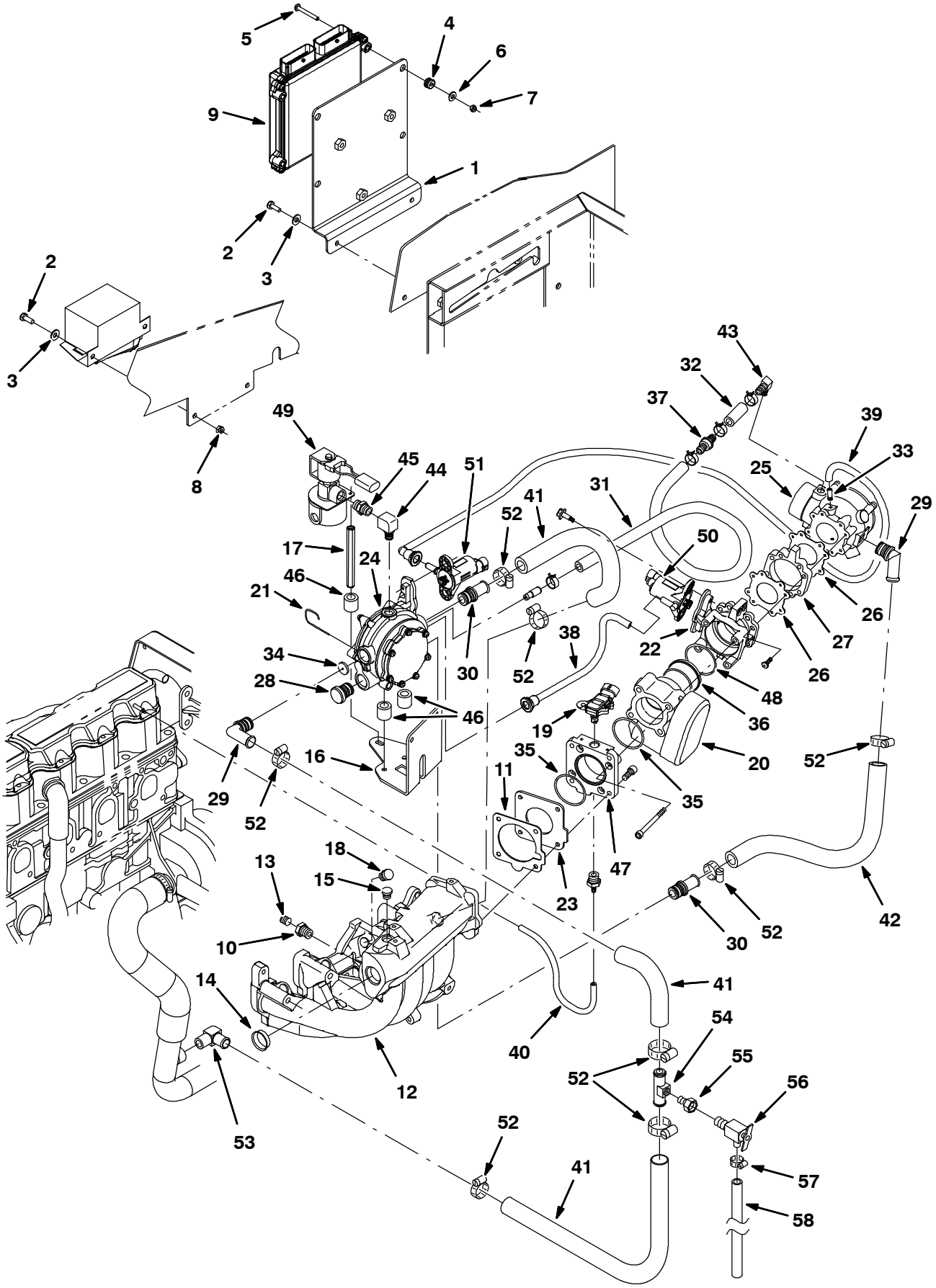

354417

Fig. 15 - Engine EFI Group, LPG (000000-001999)

	Ref.	Part No.	Serial Number	Description	Qty.
	1	1018939	(000000-001999)	Bracket, Mtg [Ecu]	1
	2	06942	(000000-001999)	Screw, Hex, M6 X 1.0 X 16, 8.8	4
	3	32483	(000000-001999)	Washer, Flat, 0.25 Sae	4
	4	46314	(000000-001999)	Grommet, Rbr, 0.20id, F/0.4h, .12 Matl	4
	5	06938	(000000-001999)	Screw, Pan, M5 X 0.8 X 40, 4.8	4
	6	01683	(000000-001999)	Washer, Flat, #10, Ss	8
	7	06549	(000000-001999)	Nut, Hex, Lock, M5 X 0.8, Nl	4
	8	08708	(000000-001999)	Nut, Hex, Lock, M6 X 1.0, Nl	2
	9	372857	(000000-001999)	Module, Ecu, Lpg [Gm 1.6l]	1
	10	372537	(000000-001999)	Bushing, M06-1.50 X .25-27npt	1
	11	372544	(000000-001999)	Gasket, Manifold, Intake	1
	12	372547	(000000-001999)	Manifold, Intake [1.6l]	1
	13	372548	(000000-001999)	Plug, .12npt, Ss	1
	14	372549	(000000-001999)	Plug, Manifold, Intake	1
	15	372550	(000000-001999)	Plug, Port, Sensor [Map]	1
	16	372576	(000000-001999)	Bracket, Reg [1.6l]	1
	17	372577	(000000-001999)	Spacer, Sppt, Fltr Lock Off	1
	18	372579	(000000-001999)	Plug, Hole, Injector	4
	19	372493	(000000-001999)	Sensor [Tmap]	1
	20	372482	(000000-001999)	Housing, Throttle, 40mm [Bosch]	1
	21	372523	(000000-001999)	Pin, Retainer	5
	22	372580	(000000-001999)	Adapter, Valve, Fuel Trim	1
	23	372582	(000000-001999)	Adapter, Plate	1
	24	372500	(000000-001999)	Converter, Lpg	1
	25	372898	(000000-001999)	Mixer, Lpg [Gm 1.6l]	1
	26	372608	(000000-001999)	Gasket	2
	27	372612	(000000-001999)	Adapter, Throttle Body	1
	28	372515	(000000-001999)	Fitting, Cap	1
	29	372512	(000000-001999)	Fitting, E70	2
	30	372514	(000000-001999)	Fitting, Str	2
	31	372506	(000000-001999)	Hose, Balancing, Press, 680mm	1
	32	372507	(000000-001999)	Hose, Balancing, Press, 045mm	1
	33	372511	(000000-001999)	Fitting, Hose, Vacuum, .25	1
	34	372517	(000000-001999)	Restrictor, Jet, Coolant	1
	35	372484	(000000-001999)	Seal, Org	1
	36	372498	(000000-001999)	Sleeve, Throttle, Plstc [Bosch]	1
	37	372569	(000000-001999)	Valve, Check	1
	38	372609	(000000-001999)	Hose, 170mm [Ftv-Ptv]	1
	39	372605	(000000-001999)	Hose, Valve, Press Trim, 350mm	1
	40	372607	(000000-001999)	Hose, 9.5mm X 290mm [Pcv]	1
	41	372528	(000000-001999)	Hose, Mold, .62 To .75	1
	42	372606	(000000-001999)	Hose, 355mm [Fl-Vrp]	1
	43	372510	(000000-001999)	Fitting, E90	1
	44	372611	(000000-001999)	Fitting, Str, E90, .25npt	1
	45	372610	(000000-001999)	Fitting, Nipple, .25npt, Brs	1
	46	372518	(000000-001999)	Isolator, Mtg, Vaporizer, Rbr	3
	47	372558	(000000-001999)	Adapter [1.6]	1
	48	372613	(000000-001999)	Seal, Org, Throttle Body	1
▽	49	372503	(000000-001999)	Valve, Fuelock, Lpg, Wire Connector	1
▲		372615	(000000-001999)	Filter Kit, Fuelock, Lpg	1

Fig. 15 - Engine EFI Group, LPG (000000-001999)

Ref.	Part No.	Serial Number	Description	Qty.
50	372501	(000000-001999)	Valve, Trim, Fuel, Normal Flow	1
51	372497	(000000-001999)	Valve, Body, Throttle, Lpg	1
52	63810	(000000-001999)	Clamp, Hose, Wormdrive, 0.56-1.06d, .56w	9
53	51839	(000000-001999)	Fitting, Brs, E90, Em10/Pm06	1
54	83578	(000000-001999)	Tube, Air Bleed, .62d 2.2l .12npt Alm	1
55	1015930	(000000-001999)	Fitting, Brs, Str, Pf04/Pm02	1
56	51305	(000000-001999)	Fitting, Draincock, E90, .25npt	1
57	43844	(000000-001999)	Clamp, Hose, Wormdrive, 0.25-0.62d, .31w	1
58	73471	(000000-001999)	Hose, Pvc, Clr, 0.38id 0.56od 22.00l	1

Home Find... Go To..

Fig. 16 - Engine EFI Group, LPG (002000-)

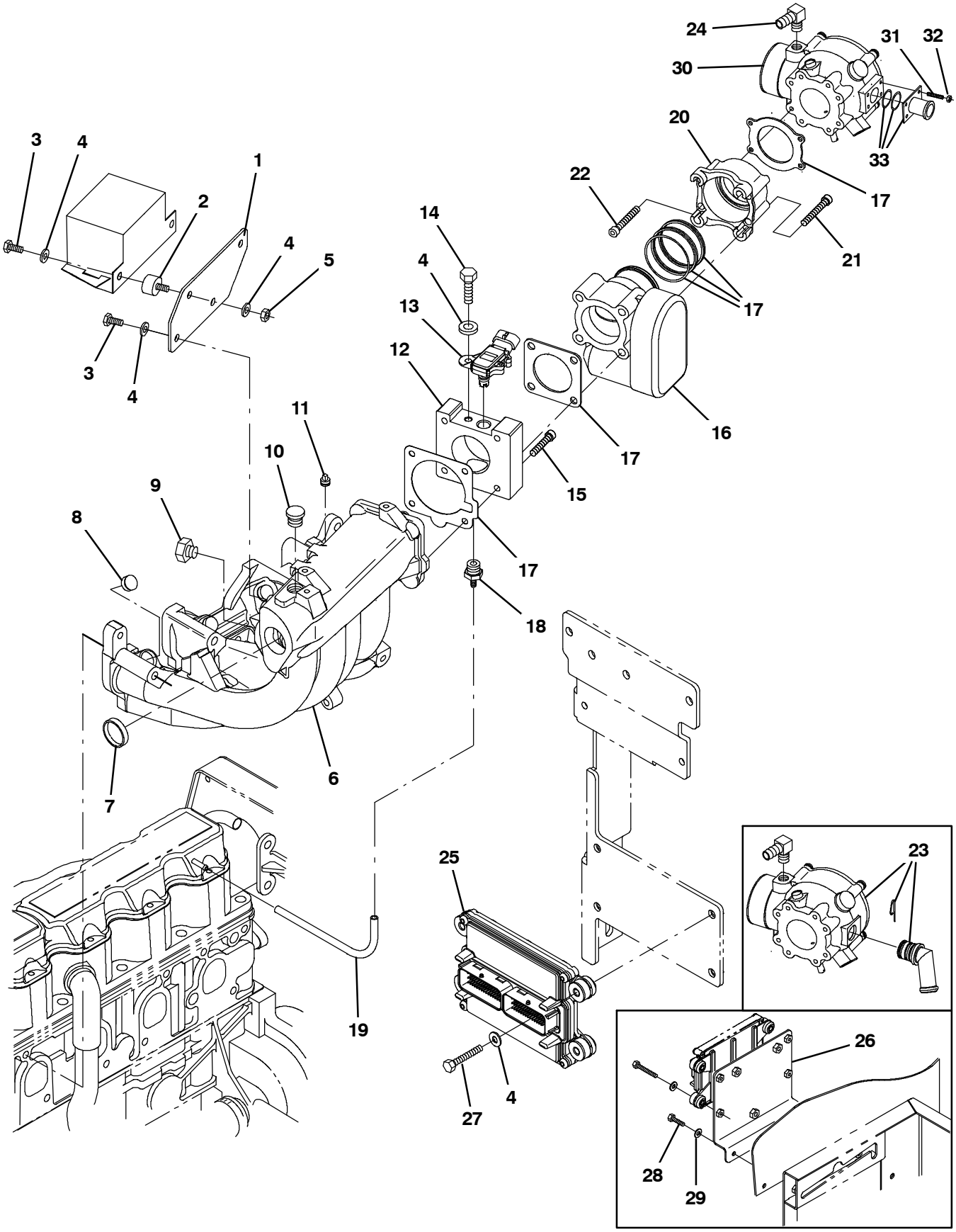

354633

Fig. 16 - Engine EFI Group, LPG (002000-)

Ref.	Part No.	Serial Number	Description	Qty.
1	1031312	(002000-)	Plate, Mtg, Relay	1
2	372470	(002000-)	Isolator, Box, Relay	2
3	19315	(002000-)	Screw, Hex, .25-20 X 0.50, G5	4
4	32490	(002000-)	Washer, Flat, 0.25, Std	9
5	19312	(002000-)	Nut, Hex, Std, .25-20	2
6	372547	(002000-)	Manifold, Intake [1.6l]	1
7	372549	(002000-)	Plug, Manifold, Intake	1
8	372579	(002000-)	Plug, Hole, Injector	4
9	384995	(002000-)	Fitting, Plug, M16, Intake Manifold	1
10	372550	(002000-)	Plug, Port, Sensor [Map]	1
11	372548	(002000-)	Plug, .12npt, Ss	1
12	372534	(002000-003122)	Adapter, Intake, Throttle Body	1
12	9006619	(003123-)	Adapter [E100 Mixer Gm 1.6l 2010]	1
13	384985	(002000-)	Sensor [T Map]	1
14	19317	(002000-)	Screw, Hex, .25-20 X 0.75, G5	1
15	06532	(002000-)	Screw, Soc, M6 X 1.00 X 25, 12.9	4
16	384974	(002000-)	Housing, Throttle, 40mm [Bosch]	1
17	9003391	(002000-)	Gasket Kit, Repair, Lpg [Gm1.6l 2007]	1
18	372543	(002000-)	Fitting, Vacuum [M16-15-6h]	1
19	384972	(002000-)	Hose, Vacuum, 0.22id X 03.0l	1
20	384996	(002000-)	Adapter, Valve, 400mm [Bosch]	1
21	09037	(002000-)	Screw, Soc, M8 X 1.25 X 70, 12.9	4
22	384991	(002000-)	Bolt, Soc Head, M5 X 80 X 35	4
23	384980	(002000-003122)	Mixer, W/70deg Ftg	1
24	384976	(002000-)	Fitting, E90	1
25	1028722	(002000-003122)	Module, Ecu, Lpg [Gm1.6l 2700]	1
25	1056233	(003123-)	Module, Ecu, Lpg [Gm1.6l 2010]	1
26	1029082	(002000-003170)	Bracket, Mtg, Ecu	1
27	06946	(002000-)	Screw, Hex, M6 X 1.00 X 35, 8.8	4
28	06942	(002000-003170)	Screw, Hex, M6 X 1.00 X 16, 8.8	2
29	32483	(002000-003170)	Washer, Flat, 0.25, Sae	2
30	9006618	(003123-)	Mixer [E100lp Gm1.6l 2010]	1
31	9007424	(003123-)	Stud, M05-0.8 [Gm1.6L Lp 2010]	4
32	9007423	(003123-)	Nut, Flng, M05-0.8 [Gm1.6L Lp 2010]	4
33	1055170	(003123-)	Fitting, Fuel [Mixer E100Lp 2010]	1

Fig. 17 - Engine Vaporizer Group, LPG (002000-003122)

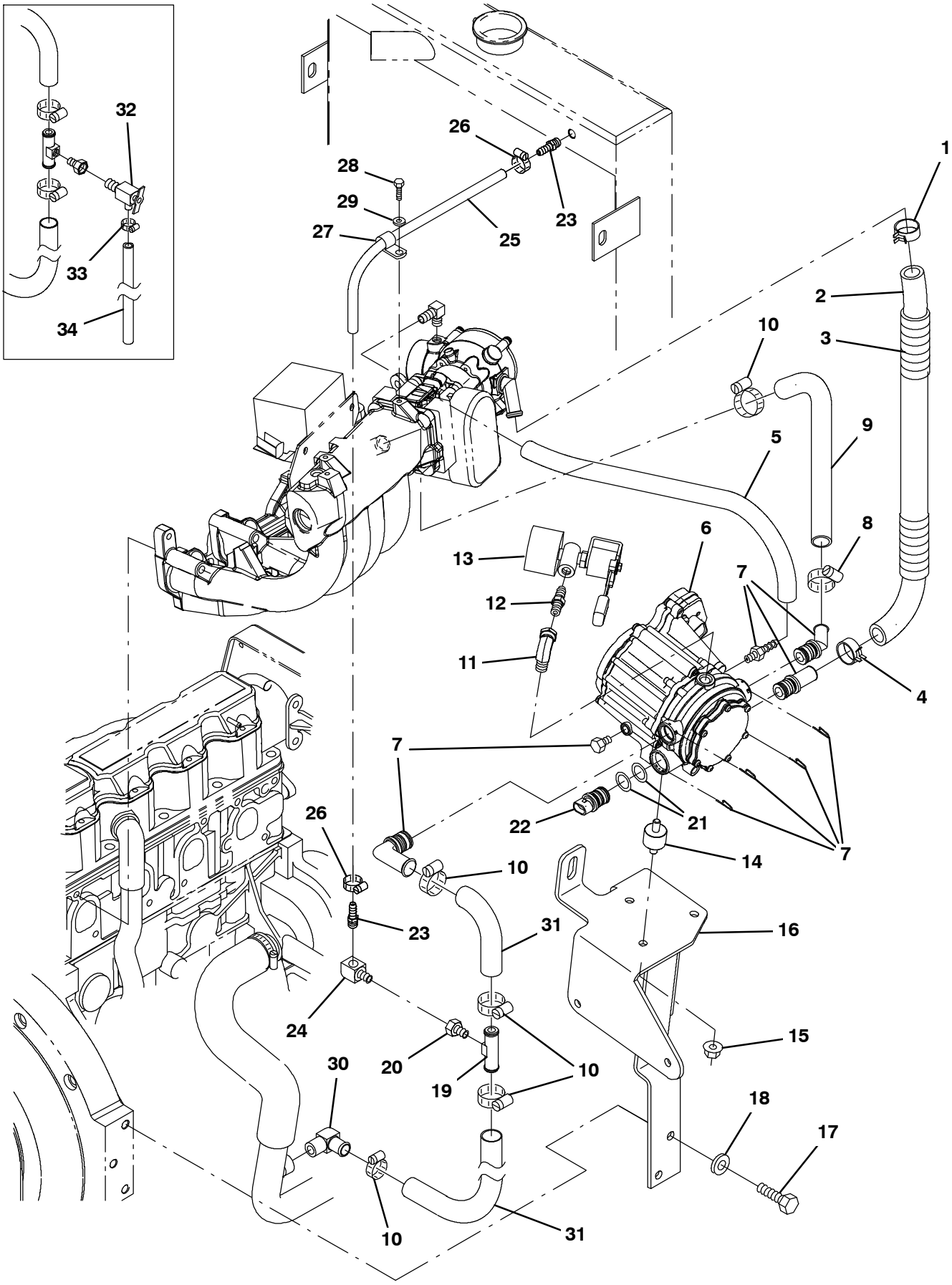

354639

Fig. 17 - Engine Vaporizer Group, LPG (002000-003122)

	Ref.	Part No.	Serial Number	Description	Qty.
	1	384970	(002000-003122)	Clamp, Hose, Spring, 0.75d	1
	2	384983	(002000-003122)	Hose [Mixer To Epr]	1
	3	384971	(002000-003122)	Cover, Hose	1
	4	384979	(002000-003122)	Clamp, Hose, Spring, 0.62d	1
	5	384973	(002000-003122)	Hose, Supply, Gas, .25id	1
	6	384977	(002000-003122)	Regulator [Ep]	1
	7	384978	(002000-003122)	Fitting Kit [Epr]	1
	8	372539	(002000-003122)	Clamp, Hose, 1.0	1
	9	384984	(002000-003122)	Hose [Epr To Manifold]	1
	10	63810	(002000-003122)	Clamp, Hose, Wormdrive, 0.56-1.06d, .56w	5
	11	11442-1	(002000-003122)	Fitting, Hyd, E90, Spcl	1
	12	372529	(002000-003122)	Fitting, Nipple, .25mal	1
▽	13	384975	(002000-003122)	Valve, Lock Off	1
▲		372615	(002000-003122)	Filter Kit, Fuelock, Lpg	1
	14	384986	(002000-003122)	Isolator [Epr]	3
	15	07791	(002000-003122)	Nut, Hex, Flng, M8 X 1.25	3
	16	1028343	(002000-003122)	Bracket Wldt, Mtg, Regulator, Lpg	1
	17	371770	(002000-003122)	Screw	2
	18	371877	(002000-003122)	Washer, Flat, 0.38, Hardened	2
	19	83578	(002000-003122)	Tube, Bleed, Air, .62od 2.2l .12npt, Alm	1
	20	1015930	(002000-003122)	Fitting, Brs, Str, Pf04/Pm02	1
	21	1041151	(002000-003122)	Seal, Org, Sensor, Temp [Epr]	2
	22	1041152	(002000-003122)	Sensor, Temp [Epr]	1
	23	150516	(002493-003122)	Fitting, Brs, Str, Bm06/Pm05	2
	24	27048	(002493-003122)	Fitting, Brs, E90, Pf04/Pm04	1
	25	1043481	(002493-003122)	Hose, Heater, 0.38id	1
	26	54333	(002493-003122)	Clamp, Hose, Wormdrive, 0.31-0.88d, .31w	2
	27	67767	(002493-003122)	Clamp, Cable, Stl, 0.69d X 0.62w, 1hole	1
	28	06942	(002493-003122)	Screw, Hex, M6 X 1.00 X 16, 8.8	1
	29	32490	(002493-003122)	Washer, Flat, 0.25, Std	1
	30	51839	(002000-003122)	Fitting, Brs, E90, Em10/Pm06	1
	31	372528	(002000-003122)	Hose, Mold, .62 To .75 (Cut in 2)	1
	32	51305	(002000-002492)	Fitting, Draincock, E90, .25npt	1
	33	43844	(002000-002492)	Clamp, Hose, Wormdrive, 0.25-0.62d, .31w	1
	34	73471	(002000-002492)	Hose, Pvc, Clr, 0.38id 0.56od 022.0l	1

Fig. 18 - Engine Vaporizer Group, LPG (003123-)

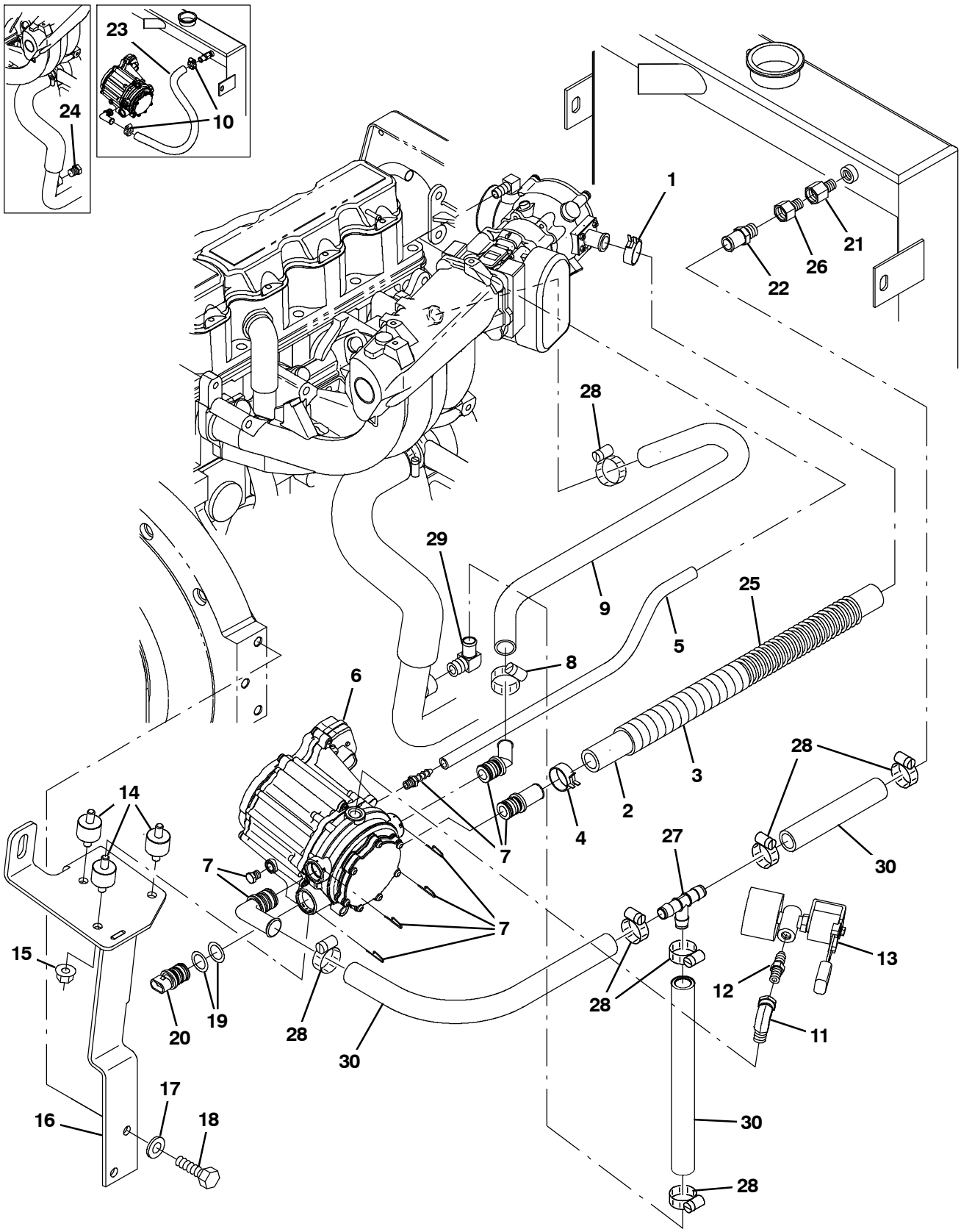

354639

Fig. 18 - Engine Vaporizer Group, LPG (003123-)

	Ref.	Part No.	Serial Number	Description	Qty.
	1	384970	(003123-)	Clamp, Hose, Spring, 0.75d	1
	2	9007552	(003123-)	Hose, Fuel [Mixer To Epr, 22.5”L]	1
	3	384971	(003123-)	Cover, Hose	1
	4	384979	(003123-)	Clamp, Hose, Spring, 0.62d	1
	5	384973	(003123-)	Hose, Supply, Gas, .25id	1
	6	384977	(003123-)	Regulator [Ep]	1
	7	384978	(003123-)	Fitting Kit [Epr]	1
	8	372539	(003123-)	Clamp, Hose, 1.0	1
	9	384984	(003123-)	Hose [Epr To Manifold]	1
	10	63810	(003123-003268)	Clamp, Hose, Wormdrive, 0.56-1.06d, .56w	3
	11	11442-1	(003123-)	Fitting, Hyd, E90, Spcl	1
	12	372529	(003123-)	Fitting, Nipple, .25mal	1
▽	13	9006620	(003123-)	Valve, Lock Off [Gm 1.6L 2010]	1
▲		9007380	(003123-)	Filter, Fuellock, Lpg [Gm1.6L 2010]	1
	14	384986	(003123-)	Isolator [Epr]	3
	15	07791	(003123-)	Nut, Hex, Flng, M8 X 1.25	3
	16	1056300	(003123-)	Bracket Wldt, Mtg, Reg, Lpg[Gm 2010]	1
	17	371770	(003123-)	Screw	2
	18	371877	(003123-)	Washer, Flat, 0.38, Hardened	2
	19	1041151	(003123-)	Seal, Org, Sensor, Temp [Epr]	2
	20	1041152	(003123-)	Sensor, Temp [Epr]	1
	21	1042772	(003123-)	Fitting, Brs, Str, Pf06/Pm04	2
	22	27767	(003123-)	Fitting, Brs, Str, Em10/Pm06	1
	23	13048	(003123-003268)	Hose, Heater, 0.62id, 038.0l	1
	24	762282	(003123-003268)	Fitting, Hyd, Plug, Pm06	1
	25	9007553	(003123-)	Spring, 3/4 X 16 [Gm1.6L 2010 Lpg]	1
	26	1015547	(003123-)	Fitting, Adapter, Orifice, Pf06/Pm06	1
	27	1062116	(003269-)	Fitting, Plstc, Tee, Bm10/Bm10/Bm10	1
	28	63810	(003269-)	Clamp, Hose, Wormdrive, 0.56-1.06d, .56w	7
	29	51839	(003269-)	Fitting, Brs, E90, Em10/Pm06	1
	30	1016561	(003269-)	Hose, Afmkt, Rbr, Heater, 0.62id, 08ft	1

Fig. 19 - Engine Fuel Tank Group, Gasoline (000000-001999)

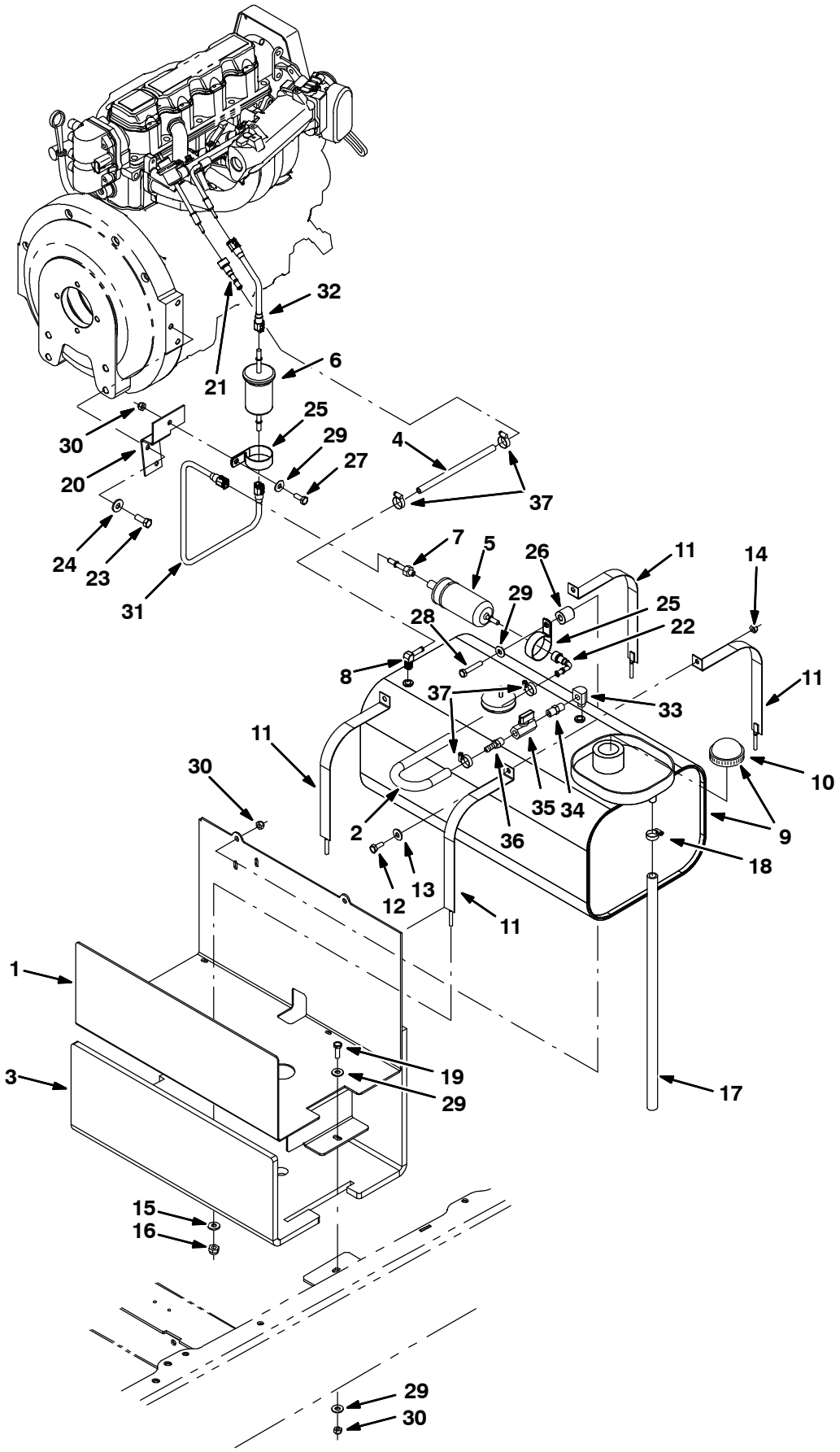

354418

Fig. 19 - Engine Fuel Tank Group, Gasoline (000000-001999)

	Ref.	Part No.	Serial Number	Description	Qty.
	1	1026550	(000000-001999)	Tray Wldt, Fuel	1
	2	87730	(000000-001999)	Hose, Fuel, 0.31id 12.0l	1
	3	1026759	(000000-001999)	Insulation, Flame-Retardant, 0.5	1
	4	1012160	(000000-001999)	Hose, Fuel, 0.31id 24.0l	1
	5	1011107	(000000-001999)	Pump, Fuel, Hi Press [Gm 1.6l/3.0l]	1
	6	372440	(000000-001999)	Filter, Fuel [Gm 1.6l/3.0l]	1
	7	1013086	(000000-001999)	Connector, Fuel, Qf	1
	8	9000355	(000000-001999)	Fitting, Brs, E90, Em05/Pm04	1
▽	9	9002395	(000000-001999)	Tank, Fuel, 11.26Gal, gas, Replmt	1
▲	10	48267	(000000-001999)	Cap, Tank, Fuel, 2.3neck 2.6d	1
▲		1039521	(000000-001999)	Send-Unit, Fuel	1
	11	1025229	(000000-001999)	Strap, Tank, Gas	4
	12	39277	(000000-001999)	Screw, Hex, M8 X 1.25 X 25, 8.8	2
	13	32491	(000000-001999)	Washer, Flat, 0.31, Std	2
	14	08709	(000000-001999)	Nut, Hex, Lock, M8 X 1.25, Nl	2
	15	32483	(000000-001999)	Washer, Flat, 0.25 Sae	4
	16	32981	(000000-001999)	Nut, Hex, Lock, .25-20, Nl	4
	17	1023482	(000000-001999)	Hose, Fuel, 0.50id 21.0l	1
	18	54333	(000000-001999)	Clamp, Hose, Wormdrive, 0.31-0.88d, .31w	1
	19	39277	(000000-001999)	Screw, Hex, M8 X 1.25 X 25, 8.8	2
	20	1019416	(000000-001999)	Bracket, Mtg, Fuel	1
	21	1013086	(000000-001999)	Connector, Fuel, Qf	1
	22	1019939	(000000-001999)	Connector, Fuel, E90, Qf	1
	23	21197	(000000-001999)	Screw, Hex, .38-16 X 1.00, 5	2
	24	32492	(000000-001999)	Washer, Flat, 0.38 Std	2
	25	1011895	(000000-001999)	Clamp, Cable, Stl, 2.00d X 0.75w, 1 Hole	2
	26	383912	(000000-001999)	Sleeve, P/M, 0.43b 1.00d 1.0l, Stl	1
	27	16931	(000000-001999)	Screw, Hex, M8 X 1.25 X 20, 8.8	1
	28	06956	(000000-001999)	Screw, Hex, M8 X 1.25 X 45, 8.8	1
	29	32491	(000000-001999)	Washer, Flat, 0.31, Std	6
	30	08709	(000000-001999)	Nut, Hex, Lock, M8 X 1.25, Nl	4
	31	1026664	(000000-001999)	Fuelline, .31d Str/Str, Plstc	1
	32	1019394	(000000-001999)	Fuelline, .31d Str/Str, Plstc	1
	33	27048	(000000-001999)	Fitting, Brs, E90, Pf04/Pm04	1
	34	398468	(000000-001999)	Fitting, Brs, Str, Pm04/Pm04	1
	35	1019940	(000000-001999)	Valve, Ball, 04pf, Chm W/ Handle	1
	36	392629	(000000-001999)	Fitting, Brs, Str, Bm05/Pm04	1
	37	54333	(000000-001999)	Clamp, Hose, Wormdrive, 0.31-0.88d, .31w	4

Fig. 20 - Engine Fuel Tank Group, Gasoline (002000-)

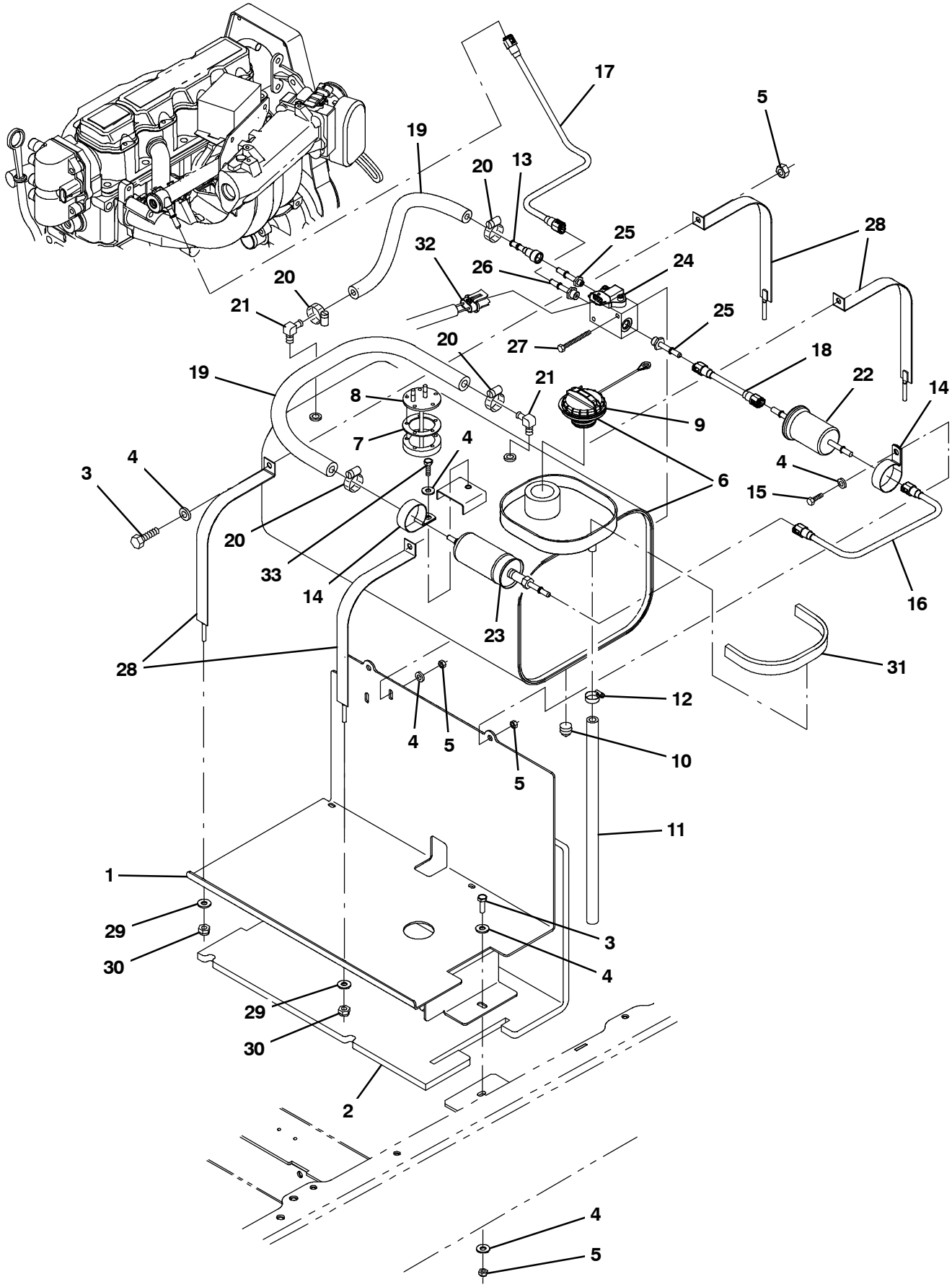

354418

Fig. 20 - Engine Fuel Tank Group, Gasoline (002000-)

	Ref.	Part No.	Serial Number	Description	Qty.
	1	1026550	(002000-)	Tray Wldt, Fuel	1
	2	1026759	(002000-)	Insulation, Flame-Retardant, 0.5	1
	3	39277	(002000-)	Screw, Hex, M8 X 1.25 X 25, 8.8	4
	4	32491	(002000-)	Washer, Flat, 0.31, Std	8
	5	08709	(002000-)	Nut, Hex, Lock, M8 X 1.25, Nl	5
▽	6	9003610	(002000-)	Tank, Fuel, 11.2gal, Gas, Replmt [2007]	1
▲	7	1033897	(002000-)	Gasket, Sender, Fuel	1
▲	8	1033901	(002000-)	Send-Unit, Fuel [2007]	1
▲	9	1032812	(002000-)	Cap, Fuel, Tank	1
▲	10	48126	(002000-)	Fitting, Pipe, Plug, Pm02, Sq Head	1
	11	1023482	(002000-)	Hose, Fuel, 0.50id, 21.0l	1
	12	54333	(002000-)	Clamp, Hose, Wormdrive, 0.31-0.88d, .31w	1
	13	1013086	(002000-)	Connector, Fuel, Qf	2
	14	1011895	(002000-)	Clamp, Cable, Stl, 2.00d X 0.75w, 1hole	2
	15	06956	(002000-)	Screw, Hex, M8 X 1.25 X 45, 8.8	2
	16	1034676	(002000-)	Fuelline, .31d Str/Str,Plstc[M20/T20 07]	1
	17	1034655	(002000-)	Fuelline, .31d Str/Str,Plstc[M20/T20 07]	1
	18	1012248	(002000-)	Fuelline, .31d Str/Str, Plstc	1
	19	1033746	(002000-)	Hose, Fuel, 0.31id [Evap Emission 07]	2
	20	54333	(002000-)	Clamp, Hose, Wormdrive, 0.31-0.88d, .31w	4
	21	9000355	(002000-)	Fitting, Brs, E90, Em05/Pm04	2
	22	372440	(002000-)	Filter, Fuel [Gm 1.6l/3.0l]	1
	23	1011107	(002000-)	Pump, Fuel, Hi Press [Gm 1.6l/3.0l]	1
	24	1028924	(002000-)	Manifold, Gas, Relief, Valve	1
	25	1029293	(002000-)	Fitting, Fuel, Str, 0.56-18 [07 Eng]	2
	26	1029295	(002000-)	Fitting, Fuel, Str, 0.38-24 [07 Eng]	1
	27	06949	(002000-)	Screw, Hex, M6 X 1.0 X 50, 8.8	2
	28	1025229	(002000-)	Strap, Tank, Gas	4
	29	32483	(002000-)	Washer, Flat, 0.25, Sae	4
	30	32981	(002000-)	Nut, Hex, Lock, .25-20, Nl	4
	31	62595-15	(002000-)	Molding, Trim, Pvc, .08-.11 13.2l	1
	32	385009	(002000-)	Harness, Manifold, Gas	1
	33	16931	(002000-)	Screw, Hex, M8 X 1.25 X 20, 8.8	1

Fig. 21 - Engine Fuel Tank Group, LPG

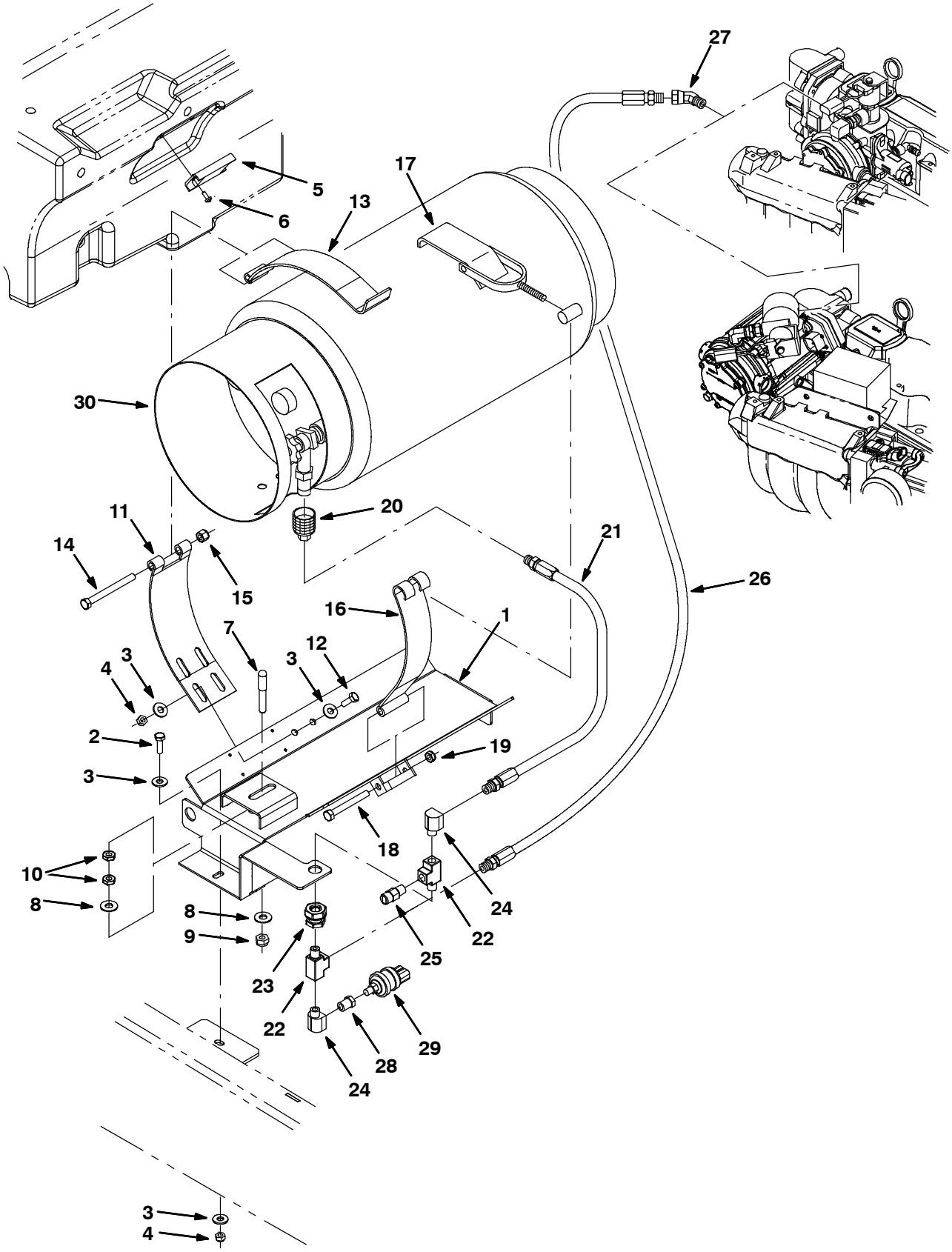

354419

Fig. 21 - Engine Fuel Tank Group, LPG

Ref.	Part No.	Serial Number	Description	Qty.
1	1017947	(000000-)	Tray Wldt, Lpg	1
2	39277	(000000-)	Screw, Hex, M8 X 1.25 X 25, 8.8	2
3	32491	(000000-)	Washer, Flat, 0.31, Std	8
4	08709	(000000-)	Nut, Hex, Lock, M8 X 1.25, Nl	4
5	63378	(000000-)	Magnet, Drive Brush	1
6	09200	(000000-)	Screw, Pan, M5 X 0.8 X 12, Ss	2
7	1024934	(000000-)	Pin, Locating, Lpg	1
8	32492	(000000-)	Washer, Flat, 0.38 Std	2
9	41430	(000000-)	Nut, Hex, Lock, M10 X 1.5, Nl	1
10	32716	(000000-)	Nut, Hex, Jam, M10 X 1.5, Ss	2
11	58589	(000000-)	Strap, Mtg, Tank, Lpg	1
12	16931	(000000-)	Screw, Hex, M8 X 1.25 X 20, 8.8	2
13	57297	(000000-)	Strap, Mtg, Tank, Lpg, Hinge	1
14	35710	(000000-)	Screw, Hex, .38-16 X 3.75, 5	1
15	59156	(000000-)	Nut, Hex, Lock, .38-16, Nl, Ss	1
16	58590	(000000-)	Strap, Mtg, Tank, Lpg	1
17	53400-1	(000000-)	Latch Assy, Mtg, Tank, Lpg, W/Nut	1
18	35707	(000000-)	Screw, Hex, .38-16 X 3.00, 5	1
19	36643	(000000-)	Nut, Hex, Lock, .38-16, Nl, Thin	1
20	26496	(000000-)	Fitting, Brs, Qdc, Pf04, Lpg Fem	1
21	22308-6	(000000-)	Hose, Lpg, Med05, Pm04str/Sm04str, 14.0l	1
22	56976A	(000000-)	Fitting, Hyd, Tee, Pf04/Pf04/Pm04, Run	2
23	78122	(000000-)	Fitting, Brs, Str, Pf04/Pf04, Bh	1
24	27048	(000000-)	Fitting, Brs, E90, Pf04/Pm04	2
25	24047	(000000-)	Valve, Lpg, Press Relief [Rego]	1
26	19760	(000000-)	Hose, Lpg, Med05, Pm04str/Sm04str, 55.0l	1
27	392645	(000000-)	Fitting, Pipe, E45, Spcl	1
28	17414	(000000-)	Fitting, Hyd, Str, Pf02/Pm04	1
29	23156	(000000-)	Switch, Press, 12vdc 08a Spst Nc 0070psi	1
30	24928-1	(000000-)	Tank, Lpg, 33lb, W/ Gauge [Empty, Liq]	1

Fig. 22 - Engine Air Cleaner Group, Gasoline (000000-001999)

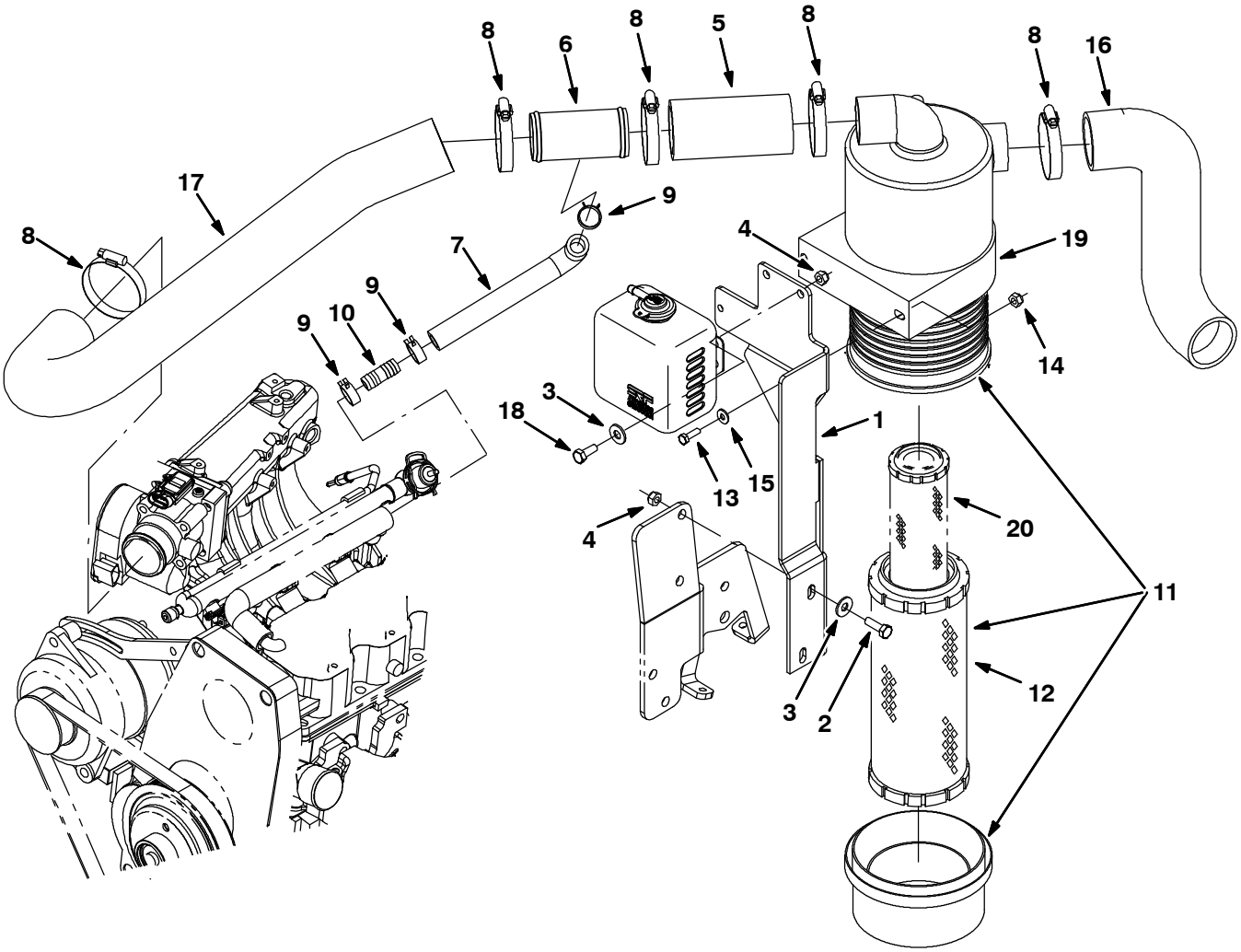

354420

Fig. 22 - Engine Air Cleaner Group, Gasoline (000000-001999)

	Ref.	Part No.	Serial Number	Description	Qty.
	1	1027856	(000000-001999)	Bracket, Mtg, Fltr, Air	1
	2	39277	(000000-001999)	Screw, Hex, M8 X 1.25 X 25, 8.8	2
	3	32491	(000000-001999)	Washer, Flat, 0.31, Std	4
	4	08709	(000000-001999)	Nut, Hex, Lock, M8 X 1.25, Nl	4
	5	15543-2	(000000-001999)	Hose, Rbr, 2.00id 2.50od 05.0l	1
	6	1011780	(000000-001999)	Tube Wldt, Tee	1
	7	1021514	(000000-001999)	Hose, Heater, E90, 0.62id 07.0 2.0	1
	8	14432	(000000-001999)	Clamp, Hose, Wormdrive, 1.81-2.75d, .50w	5
	9	1011899	(000000-001999)	Clamp, Hose, Spring Stl, 0.86d X 0.38w	3
	10	365164	(000000-001999)	Fitting, Plstc, Str, Bm10/Bm10	1
▽	11	369745	(000000-001999)	Filter Assy, Air	1
▲	12	369746	(000000-001999)	Element, Fltr, Air [Dn]	1
	13	06943	(000000-001999)	Screw, Hex, M6 X 1.0 X 20, 8.8	2
	14	08708	(000000-001999)	Nut, Hex, Lock, M6 X 1.0, Nl	2
	15	32483	(000000-001999)	Washer, Flat, 0.25 Sae	2
	16	1020949	(000000-001999)	Hose, Intake, Mold, 2.00id [Epdm]	1
	17	1017978	(000000-001999)	Hose, Intake, Mold, 2.00id, Gas [Epdm]	1
	18	16931	(000000-001999)	Screw, Hex, M8 X 1.25 X 20, 8.8	2
	19	369747	(000000-001999)	Clamp, Mtg, Fltr, Air	1
	20	398279	(000000-001999)	Element, Fltr, Air, Safety (Option)	1

Fig. 23 - Engine Air Cleaner Group, Gasoline (002000-)

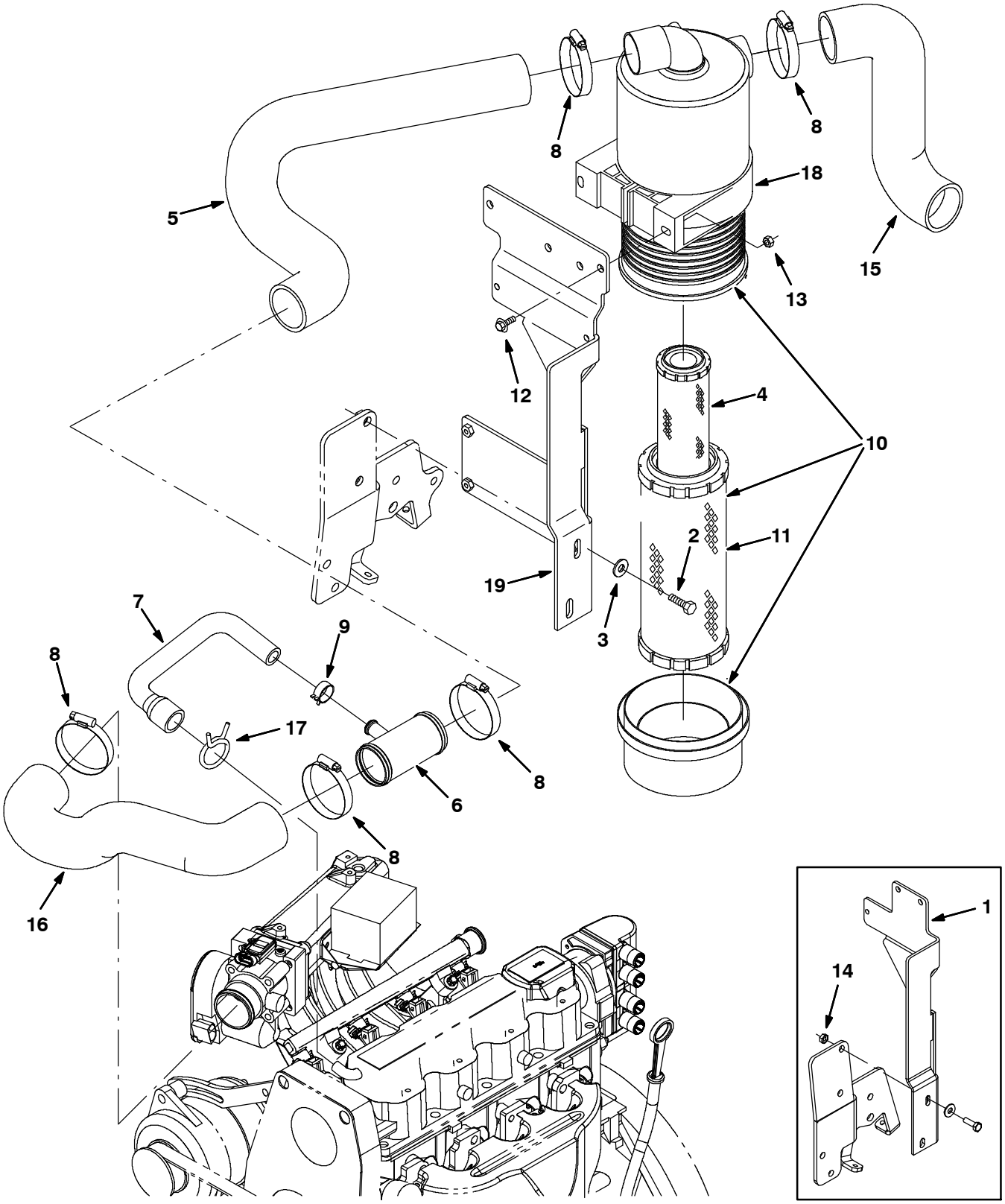

354420

Fig. 23 - Engine Air Cleaner Group, Gasoline (002000-)

	Ref.	Part No.	Serial Number	Description	Qty.
	1	1027856	(002000-003122)	Bracket, Mtg, Fltr, Air	1
	2	39277	(002000-)	Screw, Hex, M8 X 1.25 X 25, 8.8	2
	3	32491	(002000-)	Washer, Flat, 0.31, Std	2
	4	398279	(002000-)	Element, Fltr, Air, Safety (Option)	1
	5	1031614	(002000-)	Hose, Intake, Mold, 2.0id [Epdm M20/T20]	1
	6	1011780	(002000-)	Tube Wldt, Tee	1
	7	1032323	(002000-)	Hose, Vent, E90, 0.62id[Gm1.6l 2007]	1
	8	14432	(002000-)	Clamp, Hose, Wormdrive, 1.81-2.75d, .50w	5
	9	1011899	(002000-)	Clamp, Hose, Spring Stl, 0.86d X 0.38w	1
▽	10	369745	(002000-)	Filter Assy, Air	1
▲	11	369746	(002000-)	Element, Fltr, Air [Dn]	1
	12	1036892	(002000-)	Screw, Hex, M6 X 1.00 X 25, 9.8 Sems	2
	13	08708	(002000-)	Nut, Hex, Lock, M6 X 1.00, Nl	2
	14	08709	(002000-xxxxxx)	Nut, Hex, Lock, M8 X 1.25, Nl	2
	15	1020949	(002000-)	Hose, Intake, Mold, 2.00id [Epdm]	1
	16	1031609	(002000-)	Hose, Intake, Mold, 2.0id, Gas	1
	17	371854	(002000-)	Clamp, Spring, 1.50	1
	18	369747	(002000-)	Clamp, Mtg, Fltr, Air	1
	19	1056355	(003123-)	Bracket, Mtg, Fltr, Air	1

Fig. 24 - Engine Air Cleaner Group, LPG (000000-001999)

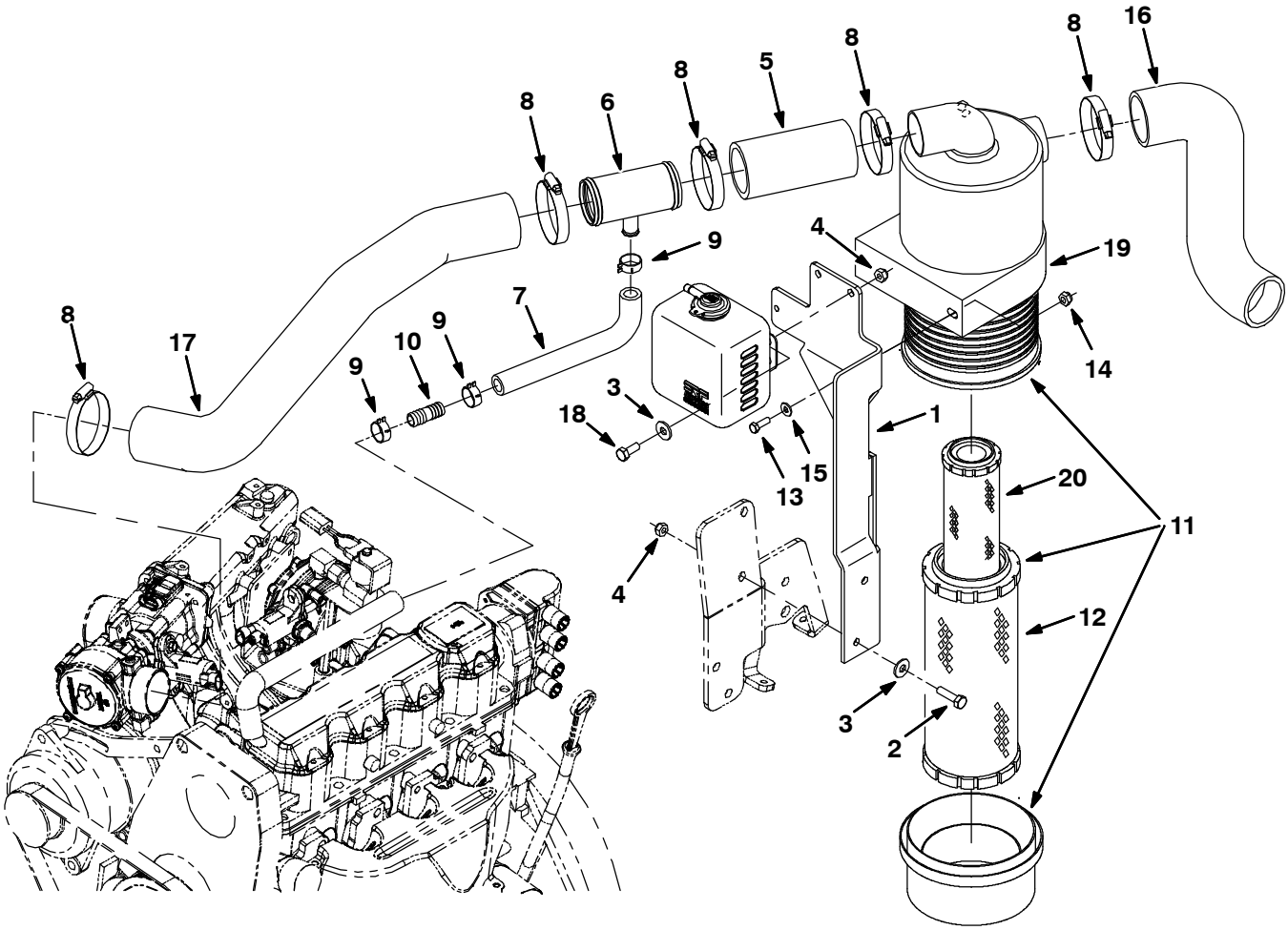

354421

Fig. 24 - Engine Air Cleaner Group, LPG (000000-001999)

	Ref.	Part No.	Serial Number	Description	Qty.
	1	1027856	(000000-001999)	Bracket, Mtg, Fltr, Air	1
	2	39277	(000000-001999)	Screw, Hex, M8 X 1.25 X 25, 8.8	2
	3	32491	(000000-001999)	Washer, Flat, 0.31, Std	4
	4	08709	(000000-001999)	Nut, Hex, Lock, M8 X 1.25, Nl	4
	5	15543-2	(000000-001999)	Hose, Rbr, 2.00id 2.50od 05.0l	1
	6	1011780	(000000-001999)	Tube Wldt, Tee	1
	7	1021514	(000000-001999)	Hose, Heater, E90, 0.62id 07.0 2.0	1
	8	14432	(000000-001999)	Clamp, Hose, Wormdrive, 1.81-2.75d, .50w	5
	9	1011899	(000000-001999)	Clamp, Hose, Spring Stl, 0.86d X 0.38w	3
	10	365164	(000000-001999)	Fitting, Plstc, Str, Bm10/Bm10	1
▽	11	369745	(000000-001999)	Filter Assy, Air	1
▲	12	369746	(000000-001999)	Element, Fltr, Air [Dn]	1
	13	06943	(000000-001999)	Screw, Hex, M6 X 1.0 X 20, 8.8	2
	14	08708	(000000-001999)	Nut, Hex, Lock, M6 X 1.0, Nl	2
	15	32483	(000000-001999)	Washer, Flat, 0.25 Sae	2
	16	1020949	(000000-001999)	Hose, Intake, Mold, 2.00id [Epdm]	1
	17	1017987	(000000-001999)	Hose, Intake, Mold, 2.00id, Lpg [Epdm]	1
	18	16931	(000000-001999)	Screw, Hex, M8 X 1.25 X 20, 8.8	2
	19	369747	(000000-001999)	Clamp, Mtg, Fltr, Air	1
	20	398279	(000000-001999)	Element, Fltr, Air, Safety (Option)	1

Fig. 25 - Engine Air Cleaner Group, LPG (002000-)

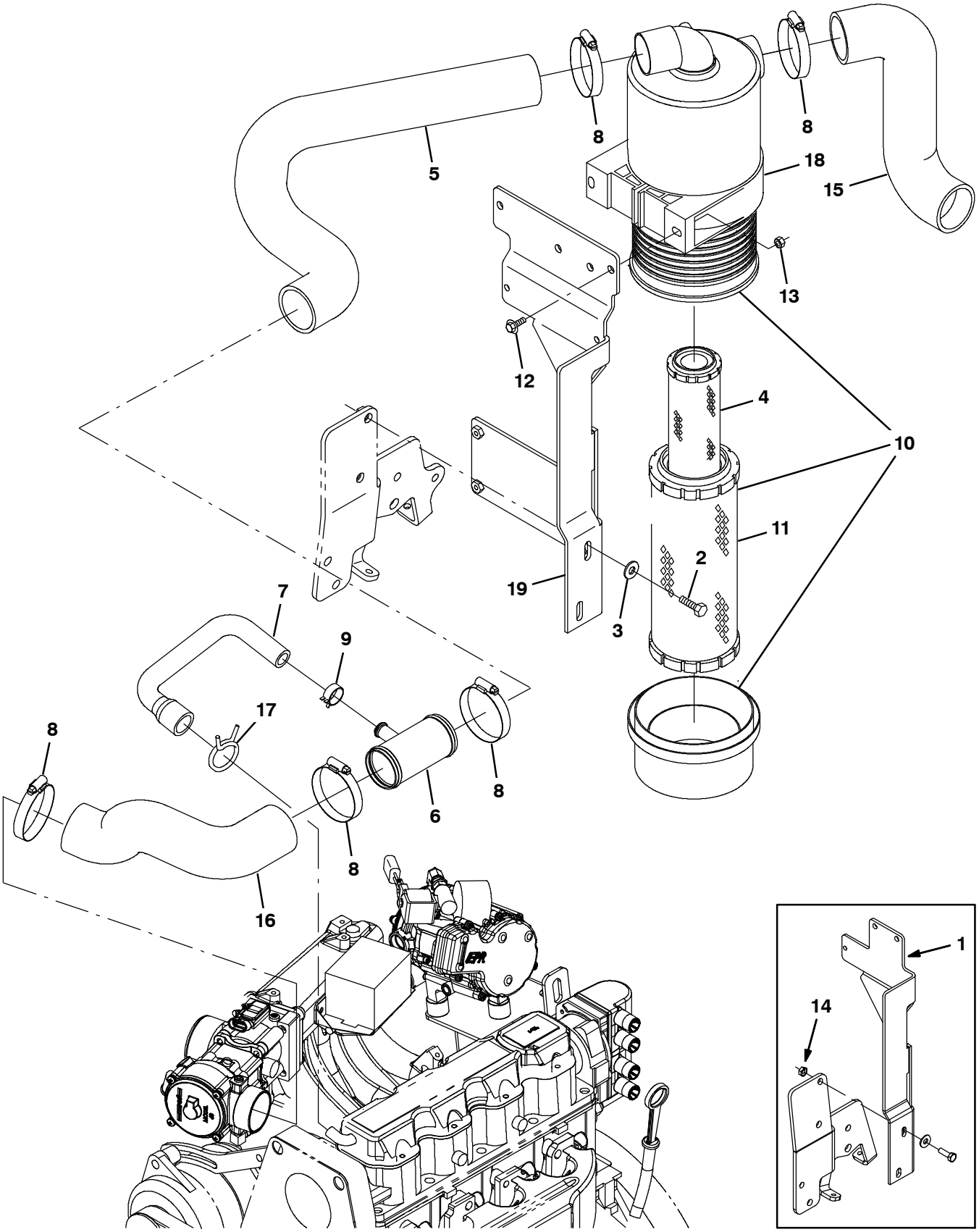

354421

Fig. 25 - Engine Air Cleaner Group, LPG (002000-)

	Ref.	Part No.	Serial Number	Description	Qty.
	1	1027856	(002000-003122)	Bracket, Mtg, Fltr, Air	1
	2	39277	(002000-)	Screw, Hex, M8 X 1.25 X 25, 8.8	2
	3	32491	(002000-)	Washer, Flat, 0.31, Std	2
	4	398279	(002000-)	Element, Fltr, Air, Safety (Option)	1
	5	1031614	(002000-)	Hose, Intake, Mold, 2.0id [Epdm M20/T20]	1
	6	1011780	(002000-)	Tube Wldt, Tee	1
	7	1032323	(002000-)	Hose, Vent, E90, 0.62id[Gm1.6l 2007]	1
	8	14432	(002000-)	Clamp, Hose, Wormdrive, 1.81-2.75d, .50w	5
	9	1011899	(002000-)	Clamp, Hose, Spring Stl, 0.86d X 0.38w	1
▽	10	369745	(002000-)	Filter Assy, Air	1
▲	11	369746	(002000-)	Element, Fltr, Air [Dn]	1
	12	1036892	(002000-)	Screw, Hex, M6 X 1.00 X 25, 9.8 Sems	2
	13	08708	(002000-)	Nut, Hex, Lock, M6 X 1.00, Nl	2
	14	08709	(002000-xxxxxx)	Nut, Hex, Lock, M8 X 1.25, Nl	2
	15	1020949	(002000-)	Hose, Intake, Mold, 2.00id [Epdm]	1
	16	1031553	(002000-003122)	Hose, Intake, Mold, 2.0id, Lpg	1
	16	1054558	(003123-)	Hose, Intake, Mold, 2.0id, Lpg [Gm 2010]	1
	17	371854	(002000-)	Clamp, Spring, 1.50	1
	18	369747	(002000-)	Clamp, Mtg, Fltr, Air	1
	19	1056355	(003123-)	Bracket, Mtg, Fltr, Air	1

Fig. 26 - Engine Alternator and Fan Group

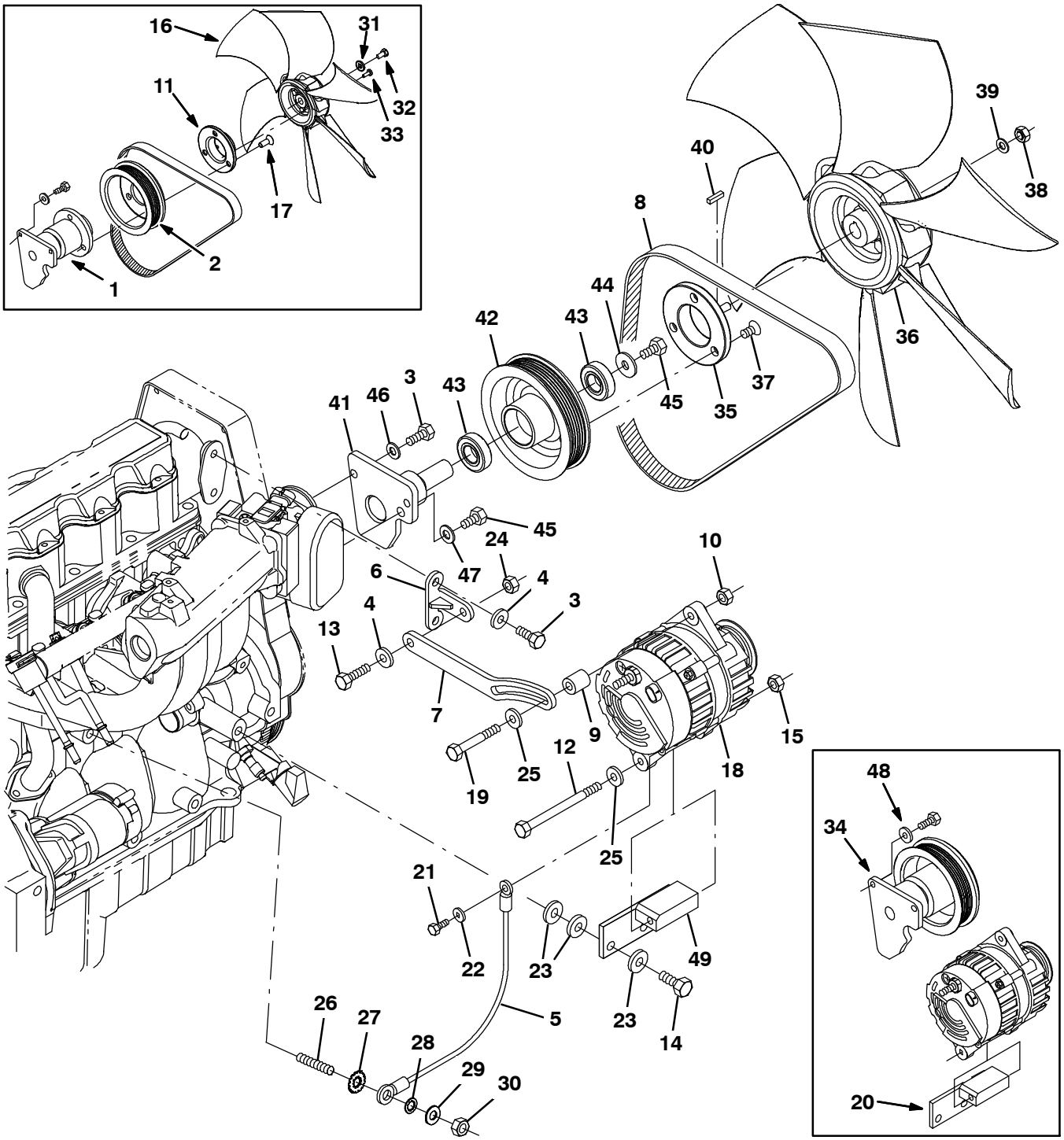

354422

Fig. 26 - Engine Alternator and Fan Group

Ref.	Part No.	Serial Number	Description	Qty.
1	371863	(000000-001999)	Base Assy, Fan, W/O Pulley	1
2	1033428	(000000-001999)	Sheave, 5.00dia [Gm1.6l 2007]	1
3	16931	(000000-)	Screw, Hex, M8 X 1.25 X 20, 8.8	4
4	371865	(000000-)	Washer, Flat, 0.31, Hardened	5
5	371527	(000000-)	Wire, Ground	1
6	371871	(000000-)	Bracket, Anchor, Strap, Alternator	1
7	371872	(000000-)	Strap, Adj, Alternator	1
8	1033644	(000000-)	Belt, Ribbed, 38.5l	1
9	372557	(000000-)	Spacer, Strap, Adj, Alternator	1
10	39311	(000000-)	Nut, Hex, Std, M8 X 1.25	1
11	1032242	(000000-001999)	Spacer, Fan	1
12	39785	(000000-)	Screw, Hex, .31-18 X 4.50, 5	1
13	76958	(000000-)	Screw, Hex, .31-18 X 1.75, 5	1
14	06961	(000000-)	Screw, Hex, M10 X 1.5 X 20, 8.8	2
15	32983	(000000-)	Nut, Hex, Lock, .31-18, Nl	1
16	1035031	(000000-001999)	Fan, Cooling, Pusher, 15.5D [2007]	1
17	48998	(000000-001999)	Screw, Flt, .38-16 X 1.00, Al	3
18	393209	(000000-)	Alternator, 12vdc 075a [Multi Grv]	1
19	363976	(000000-)	Screw, Hex, M8 X 1.25 X 60, 8.8, Fl	1
20	9006917	(000000-003122)	Bracket Kit, Alternator, Repair	1
21	42011	(000000-)	Screw, Hex, #10-24 X 0.50, Ss	1
22	19066	(000000-)	Washer, Flat, #10	1
23	32485	(000000-)	Washer, Flat, 0.38 Sae	4
24	19313	(000000-)	Nut, Hex, Std, .31-18	1
25	39349	(000000-)	Washer, Flat, 0.31 Sae	2
26	384442	(000000-)	Stud, M10 X 1.50 [35]	1
27	32988	(000000-)	Washer, Lock, Int, 0.38	1
28	41142	(000000-)	Washer, Lock, Int-Ext, 0.38	1
29	32485	(000000-)	Washer, Flat, 0.38 Sae	1
30	32716	(000000-)	Nut, Hex, Jam, M10 X 1.5, Ss	1
31	41186	(000000-001999)	Washer, Flat, Belleville, .31	1
32	16735	(000000-001999)	Screw, Hex, M8 X 1.25 X 16, 8.8	1
33	09145	(000000-001999)	Screw, Pan, M6 X 1.00 X 16, 4.8	3
34	9007088	(002000-003122)	Sheave Assy Kit, Repair	1
35	1035530	(002000-)	Spacer, Fan, Taper [2007]	1
36	1035771	(002000-)	Fan, Cooling, 15.5d, 6 Blade, .5b Taper	1
37	48996	(002000-)	Screw, Flt, .38-16 X 0.75, Al	3
38	08709	(002000-)	Nut, Hex, Lock, M8 X 1.25, Nl	1
39	32491	(002000-)	Washer, Flat, 0.31, Std	1
40	00960	(002000-)	Key, Sq, 0.12 X 0.12, 0.50l	1
41	1055381	(003123-)	Plate Wldt, Fan, Hub [Gm 1.6l]	1
42	1055425	(003123-)	Sheave, Mach [Gm1.6l]	1
43	1055377	(003123-)	Bearing, Ball, 20mm B 42mm D 12mm W	2
44	1014563	(003123-)	Washer, Flat, 0.40b 1.12d .12, Ss	1
45	21195	(003123-)	Screw, Hex, .38-16 X 0.75, G5	2
46	39349	(003123-)	Washer, Flat, 0.31, Sae	2
47	32485	(003123-)	Washer, Flat, 0.38, Sae	1
48	371865	(000000-003122)	Washer, Flat, 0.31, Hardened	2
49	1008640	(003123-)	Bracket Wldt, Alternator, Lower [Gm1.6l]	1

Fig. 27 - Engine Muffler Group (000000-001999)

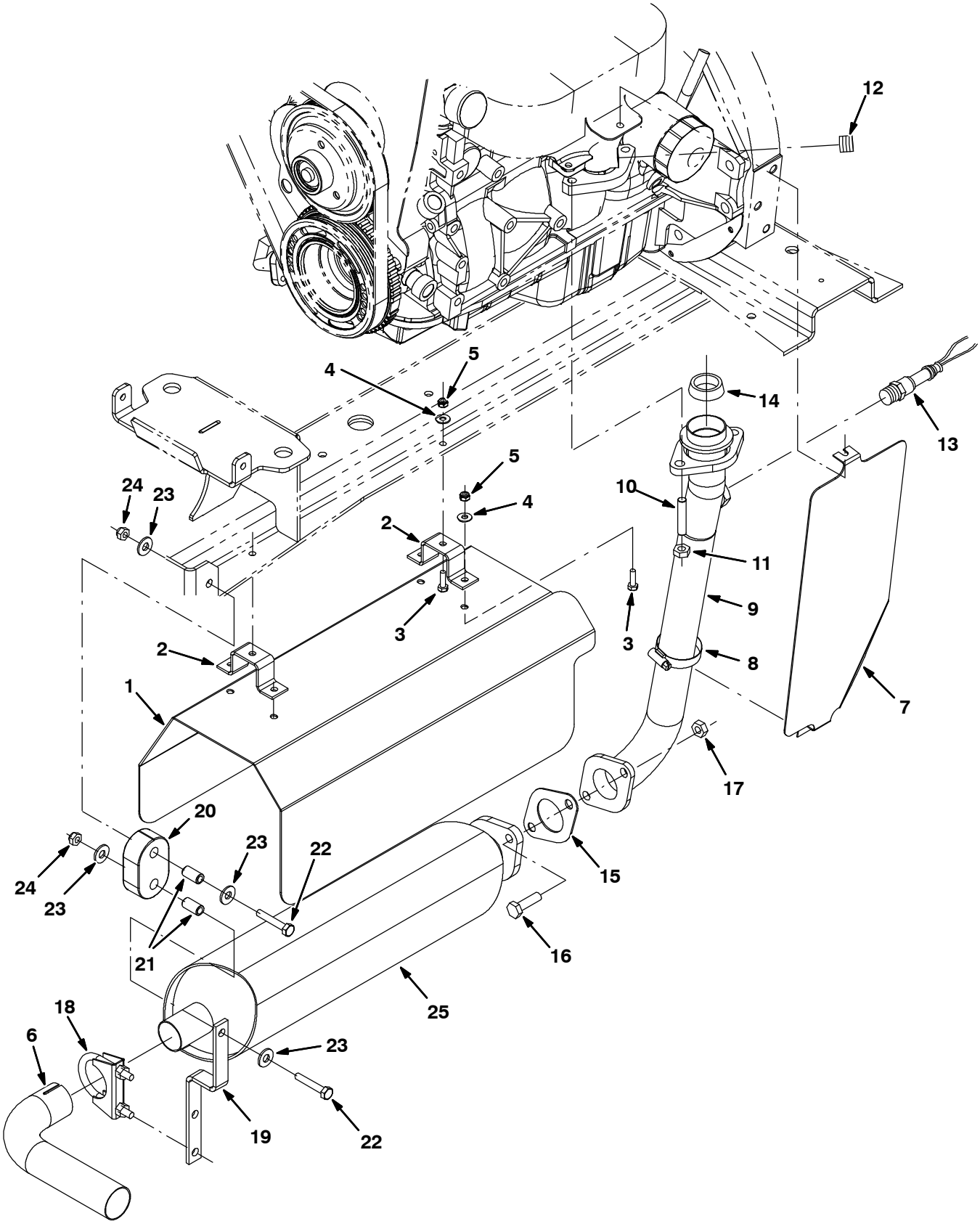

354423

Fig. 27 - Engine Muffler Group (000000-001999)

Ref.	Part No.	Serial Number	Description	Qty.
1	1020602	(000000-001999)	Channel, Shield, Muffler	1
2	1022113	(000000-001999)	Bracket, Retainer, Shield, Heat	2
3	08716	(000000-001999)	Screw, Hex, M6 X 1.0 X 20, Ss	6
4	32483	(000000-001999)	Washer, Flat, 0.25 Sae	6
5	08712	(000000-001999)	Nut, Hex, Lock, M6 X 1.0, Ss, Nl	6
6	1021789	(000000-001999)	Tube, Exhaust, 1.5d	1
7	9002394	(000000-001999)	Plate, Shield, Heat, Gas/Lpg, Replmt	1
8	11531	(000000-001999)	Clamp, Hose, Wormdrive, 1.06-2.00d, .56w	1
9	1018142	(000000-001999)	Tube Wldt, Exhaust, Gas/Lpg	1
10	384442	(000000-001999)	Stud, M10 X 1.50 [35]	2
11	08166	(000000-001999)	Nut, Hex, M10 X 1.50 [Stover]	2
12	371860	(000000-001999)	Fitting, Pipe, Plug, Metric, M18,Soc	1
13	372491	(000000-001999)	Sensor, Oxygen	1
14	371861	(000000-001999)	Gasket, Flng, Pipe, Exhaust	1
15	1011216	(000000-001999)	Gasket, Exhaust, 2hole, 3.4bc	1
16	39284	(000000-001999)	Screw, Hex, M10 X 1.5 X 35, 8.8	2
17	08166	(000000-001999)	Nut, Hex, M10 X 1.5 [Stover]	2
18	24012	(000000-001999)	Clamp, Muffler, 1.62d	1
19	1017969	(000000-001999)	Bracket, Muffler, Hanger, Front	1
20	1013031	(000000-001999)	Isolator, Rbr	1
21	222496	(000000-001999)	Sleeve, P/M, 0.31b 0.50d 0.9l [430ss]	2
22	222505	(000000-001999)	Screw, Hex, M8 X 1.25 X 45, Ss	2
23	01685	(000000-001999)	Washer, Flat, 0.31, Ss	4
24	08713	(000000-001999)	Nut, Hex, Lock, M8 X 1.25, Nl, Ss	2
25	1022794	(000000-001999)	Muffler, Short [Non-Catalytic Gm1.6/3.0]	1
25	1016624	(000000-001999)	Muffler, Catalytic [Gm 1.6]	1

Fig. 28 - Engine Muffler Group (002000-)

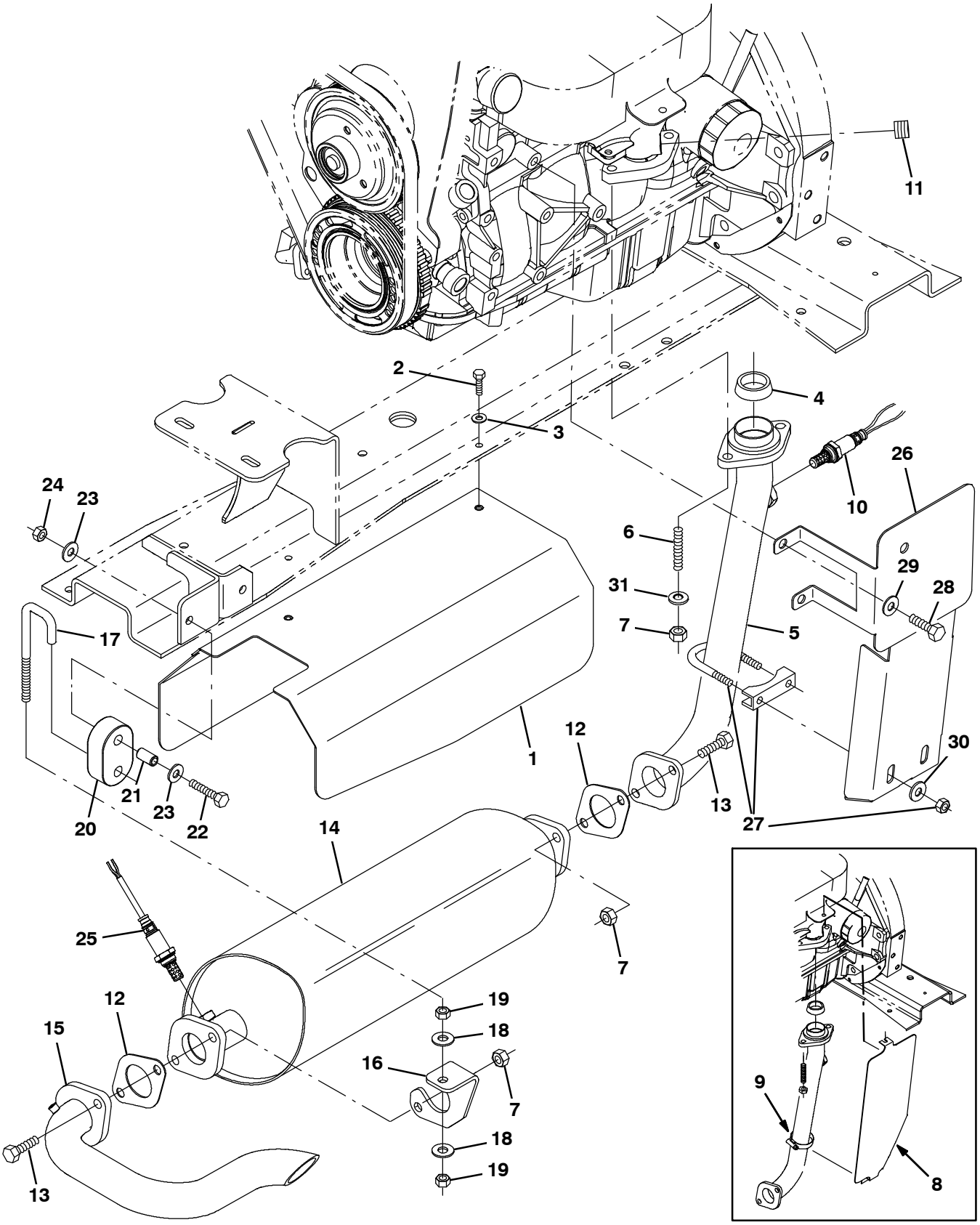

354423

Fig. 28 - Engine Muffler Group (002000-)

Ref.	Part No.	Serial Number	Description	Qty.
1	1028994	(002000-)	Channel, Shield, Muffler [M20/T20 2007]	1
2	08716	(002000-)	Screw, Hex, M6 X 1.0 X 20, Ss	2
3	32483	(002000-)	Washer, Flat, 0.25, Sae	2
4	371861	(002000-)	Gasket, Flng, Pipe, Exhaust	1
5	1018142	(002000-)	Tube Wldt, Exhaust, 1.6d, 2 Flng	1
6	384442	(002000-)	Stud, M10 X 1.50 [35]	2
7	08166	(002000-)	Nut, Hex, M10 X 1.50 [Stover]	6
8	9002394	(002000-002395)	Plate, Shield, Heat, Gas/Lpg, Replmt	1
9	11531	(002000-002395)	Clamp, Hose, Wormdrive, 1.06-2.00d, .56w	1
10	1028559	(002000-003122)	Sensor, Oxygen [Gm 1.6L/3.0L 2007]	1
10	1028558	(003123-)	Sensor, Exhaust, Tailpipe	1
11	371860	(002000-)	Fitting, Pipe, Plug, Metric, M18,Soc	1
12	1011216	(002000-)	Gasket, Exhaust, 2hole, 3.4bc	2
13	39284	(002000-)	Screw, Hex, M10 X 1.5 X 35, 8.8	4
14	1028136	(002000-003122)	Muffler, Catalytic [Gm 1.6l 2007]	1
14	1056241	(003123-)	Muffler, Catalytic [Gm 1.6l 2010]	1
15	1028753	(002000-)	Tube, Exhaust, Flng, 1.5d [M20/T20 2007]	1
16	1028929	(002000-)	Bracket, Mtg, Muffler [M20/T20 2007]	1
17	1013117	(002000-)	Rod, Hanger, Isolator	1
18	32492	(002000-)	Washer, Flat, 0.38, Std	2
19	25014	(002000-)	Nut, Hex, Std, .38-16	2
20	1013031	(002000-)	Isolator, Rbr	1
21	222496	(002000-)	Sleeve, P/M, 0.31b 0.50d 0.9l [430ss]	1
22	222505	(002000-)	Screw, Hex, M8 X 1.25 X 45, Ss	1
23	01685	(002000-)	Washer, Flat, 0.38b 0.88d .08, Ss	2
24	08713	(002000-)	Nut, Hex, Lock, M8 X 1.25, Nl, Ss	1
25	1028558	(002000-)	Sensor, Exhaust, Tailpipe	1
26	9003832	(002396-)	Shield, Heat, Gas/Lpg, Replmt	1
26	9004983	(002396-)	Shield, Heat, Gas/Lpg, Replmt (Japan Only)	1
27	24012	(002396-)	Clamp, Muffler, 1.62d	1
28	06961	(002396-)	Screw, Hex, M10 X 1.50 X 20, 8.8	2
29	32485	(002396-)	Washer, Flat, 0.38, Sae	2
30	32491	(002396-)	Washer, Flat, 0.31, Std	2
31	41187	(002000-)	Washer, Flat, Belleville, .38	2

Fig. 29 - Engine Radiator Group (000000-003038)

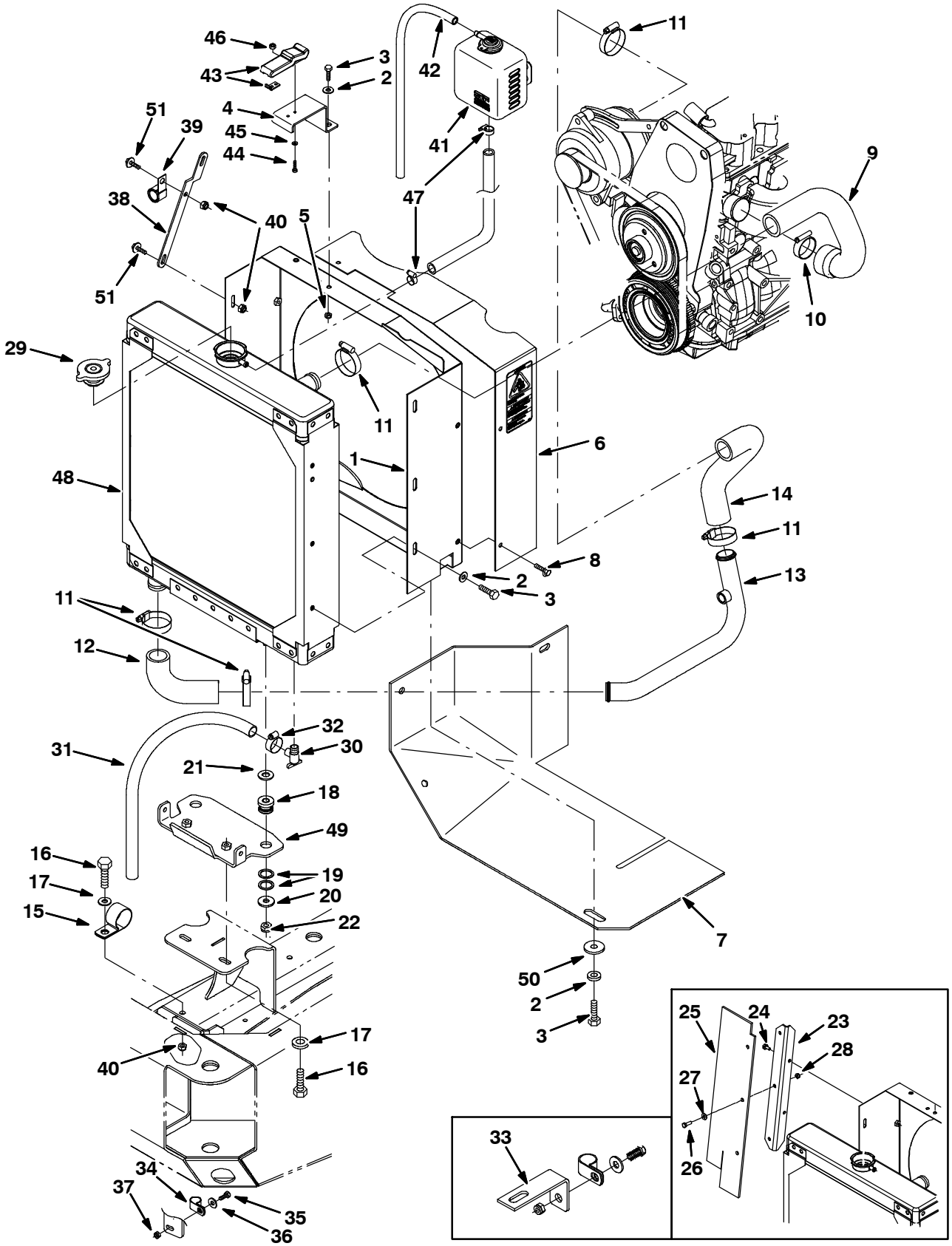

354424

Fig. 29 - Engine Radiator Group (000000-003038)

Ref.	Part No.	Serial Number	Description	Qty.
1	1038499	(000000-003038)	Panel Wldt, Shrd, Fan	1
2	32490	(000000-003038)	Washer, Flat, 0.25 Std	9
3	06942	(000000-003038)	Screw, Hex, M6 X 1.0 X 16, 8.8	13
4	1018463	(000000-003038)	Bracket, Mtg, Latch	1
5	08708	(000000-003038)	Nut, Hex, Lock, M6 X 1.0, Nl	5
6	9002393	(000000-003038)	Plate, Guard, Fan Shrd, Gas/Lpg, Replmt	1
7	1035222	(000000-003038)	Skirt, Debris, Eng Radiator	1
8	74455	(000000-003038)	Screw, Hex, M6 X 1.0 X 12, Fmg	3
9	1011799	(000000-003038)	Hose, Radiator, Upper, Mold	1
10	22297	(000000-003038)	Clamp, Hose, Wormdrive, 1.56-2.50d, .50w	1
11	11531	(000000-003038)	Clamp, Hose, Wormdrive, 1.06-2.00d, .56w	7
12	1007482	(000000-003038)	Hose, Rbr, E90 1.25id 1.25id 04.2 03.1	1
13	1019273	(000000-003038)	Tube, Coolant, Lower, 1.3d	1
14	1019265	(000000-003038)	Hose, Radiator, Lower, Mold	1
15	53466	(000000-003038)	Clamp, Cable, Stl, 1.50d X 1.00w, 1h	1
16	39277	(000000-003038)	Screw, Hex, M8 X 1.25 X 25, 8.8	3
17	32491	(000000-003038)	Washer, Flat, 0.31, Std	3
18	54274	(000000-003038)	Isolator, Vib, Bshg, 1.1d 0.6l .4b 0.78h	2
19	09832	(000000-003038)	Washer, Flat, 0.81b 1.06d .06, Stl	4
20	1014563	(000000-003038)	Washer, Flat, 0.40b 1.12d .12, Ss	2
21	32486	(000000-003038)	Washer, Flat, 0.50 Sae	2
22	41430	(000000-003038)	Nut, Hex, Lock, M10 X 1.5, Nl	2
23	1027099	(000000-001261)	Plate, Mtg, Seal	1
24	74455	(000000-001261)	Screw, Hex, M6 X 1.0 X 12, Fmg	2
25	1027103	(000000-001261)	Seal, Radiator	1
26	06943	(000000-003038)	Screw, Hex, M6 X 1.0 X 20, 8.8	4
27	32483	(000000-001261)	Washer, Flat, 0.25 Sae	3
28	08708	(000000-001261)	Nut, Hex, Lock, M6 X 1.0, Nl	3
29	1045764	(000000-003038)	Cap, Radiator, 14psi [Stant Ao-2516]	1
30	51305	(000000-003038)	Fitting, Draincock, E90, .25npt	1
31	73471	(000000-003038)	Hose, Pvc, Clr, 0.38id 0.56od 22.00l	1
32	43844	(000000-003038)	Clamp, Hose, Wormdrive, 0.25-0.62d, .31w	1
33	1026003	(000000-002241)	Bracket, Ftg, Bh	1
34	67767	(000000-003038)	Clamp, Cable, Stl, 0.69d X 0.62w, 1h	1
35	09740	(000000-003038)	Screw, Hex, M8 X 1.25 X 20, Ss	1
36	01685	(000000-003038)	Washer, Flat, 0.31, Ss	1
37	08713	(000000-003038)	Nut, Hex, Lock, M8 X 1.25, Nl, Ss	1
38	1019968	(000000-003038)	Bracket, Mtg, Radiator	1
39	30407	(000000-003038)	Clip, Keeper, Open	1
40	08709	(000000-003038)	Nut, Hex, Lock, M8 X 1.25, Nl	4
41	1023853	(000000-003038)	Tank, Coolant, 04.7 03.3 4.7deep, 1liter	1
42	1015041	(000000-003038)	Hose, Afmkt, Coolant Recvy, 05ft	1
43	49800	(000000-003038)	Latch	1
44	06927	(000000-003038)	Screw, Pan, M4 X 0.70 X 16, 4.8	2
45	19064	(000000-003038)	Washer, Flat, #06	2

Fig. 29 - Engine Radiator Group (000000-003038)

Ref.	Part No.	Serial Number	Description	Qty.
46	02850	(000000-003038)	Nut, Hex, Lock, M4 X 0.7, Nl	2
47	43844	(000000-003038)	Clamp, Hose, Wormdrive, 0.25-0.62d, .31w	2
48	1018059	(000000-002492)	Radiator (Replaced by 1045316)	1
48	1041291	(002493-003038)	Radiator	1
49	1035976	(001338-003038)	Bracket, Sppt, Radiator, Upper	1
50	41178	(000000-003038)	Washer, Flat, 0.25, Fendr	3
51	1040467	(000000-003038)	Screw, Hex, M6 X 1.0 X 20, 9.8, Sems	2

Fig. 30 - Engine Radiator and Mount Group (003039-)

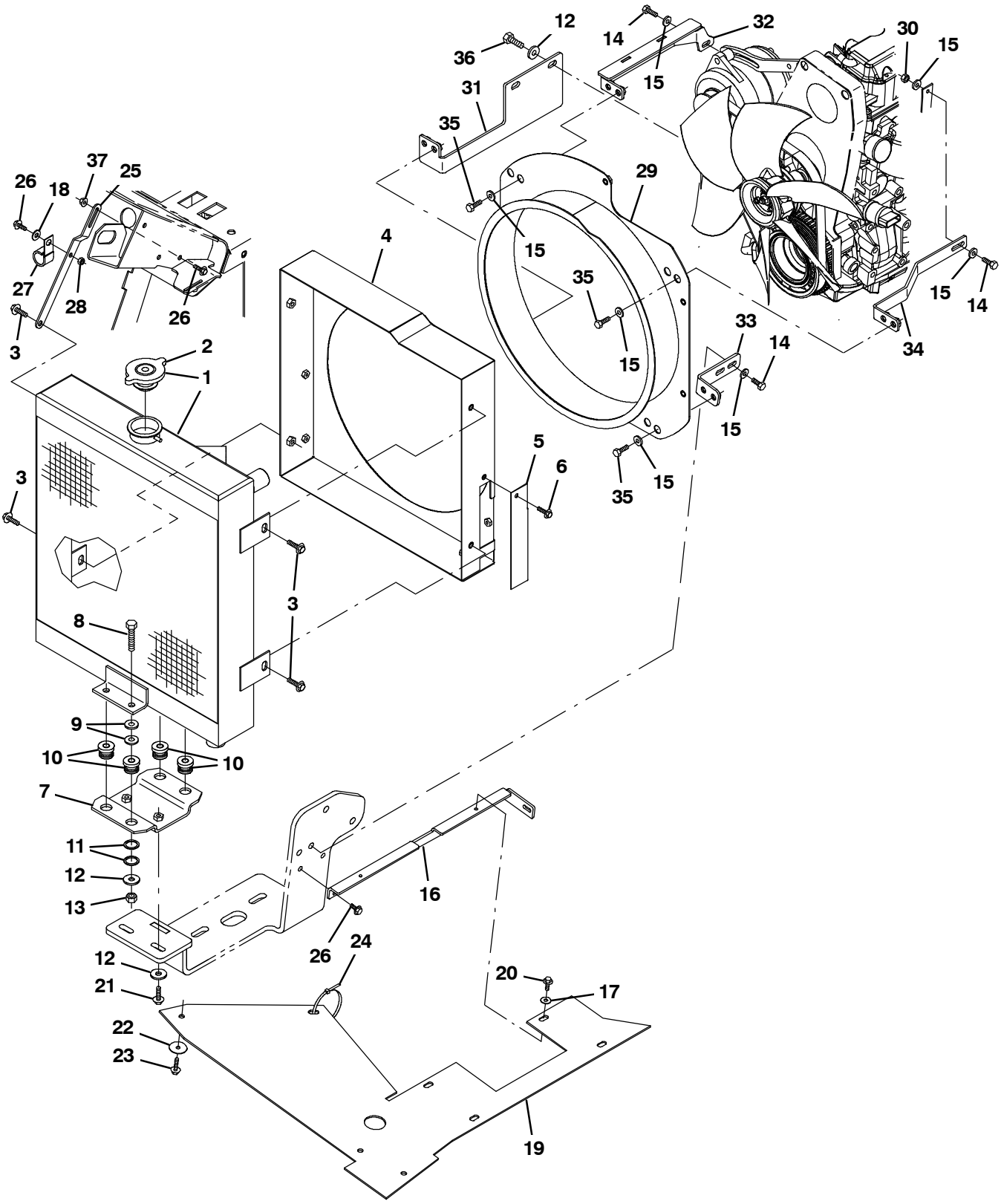

356020

Fig. 30 - Engine Radiator and Mount Group (003039-)

	Ref.	Part No.	Serial Number	Description	Qty.
▽	1	1045940	(003039-)	Radiator, W/ Hyd Cooler [Side X Side]	1
▲	2	~~1057504~~	(003039-)	Cap, Radiator, ~~16~~ Psi	1
1045764	3	1037346	(003039-)	Screw, Hex, M8 X 1.25 X 25, 9.8, Sems	4
	4	9006811	(003039-)	Shrd Wldt,Fan,G/Lp, Replmt [M20/M30/T20]	1
	4	9006813	(003039-)	Shrd Wldt,Fan,G/Lp, Replmt [TJ] (Japan Only)	1
	5	1045433	(003039-)	Bracket, Cover	1
	6	1036892	(003039-)	Screw, Hex, M6 X 1.00 X 25, 9.8 Sems	2
	7	1046962	(003039-)	Bracket, Mtg, Radiator	1
	8	06962	(003039-)	Screw, Hex, M10 X 1.50 X 45, 8.8	4
	9	32492	(003039-)	Washer, Flat, 0.38, Std	8
	10	54274	(003039-)	Isolator, Vib, Bshg, 1.1d 0.6l .4b 0.78h	4
	11	09832	(003039-)	Washer, Flat, 0.81b 1.06d .06, Stl	8
	12	1014563	(003039-)	Washer, Flat, 0.40b 1.12d .12, Ss	6
	13	41430	(003039-)	Nut, Hex, Lock, M10 X 1.5, Nl	4
	14	39277	(003039-)	Screw, Hex, M8 X 1.25 X 25, 8.8	4
	15	32491	(003039-)	Washer, Flat, 0.31, Std	12
	16	1043897	(003039-)	Bracket, Skirt, Rbr	1
	17	32483	(003039-)	Washer, Flat, 0.25, Sae	2
	18	32490	(003039-)	Washer, Flat, 0.25, Std	2
	19	1052170	(003039-)	Skirt, Eng Fan, Gas / Lp	1
	20	361339	(003039-)	Screw, Hex, M6 X 1.00 X 16, Fmg	2
	21	1037355	(003039-)	Screw, Hex, M8 X 1.25 X 35, 9.8, Sems	2
	22	41178	(003039-)	Washer, Flat, 0.25, Fendr	3
	23	1036892	(003039-)	Screw, Hex, M6 X 1.00 X 25, 9.8 Sems	3
	24	49266	(003039-)	Tie, Cable, Nyl, 07.3l .19w 1.8 Max D	1
	25	1019968	(003039-)	Bracket, Mtg, Radiator	1
	26	1040467	(003039-)	Screw, Hex, M6 X 1.00 X 20, 9.8, Sems	4
	27	30407	(003039-)	Clip, Keeper, Open	1
	28	08708	(003039-)	Nut, Hex, Lock, M6 X 1.00, Nl	1
	29	1046039	(003039-)	Shroud Wldt, Fan, 16.25d [Side X Side]	1
	30	08165	(003039-)	Nut, Hex, Stover, M8 X 1.25	1
	31	1045419	(003039-)	Bracket, Fan, Rh	1
	32	1045530	(003039-)	Bracket Wldt, Mtg, Fan, Upper	1
	33	1045415	(003039-)	Bracket, Fan, Lh	1
	34	1045447	(003039-)	Bracket, Fan, Upper, Lh	1
	35	16931	(003039-)	Screw, Hex, M8 X 1.25 X 20, 8.8	9
	36	39283	(003039-)	Screw, Hex, M10 X 1.50 X 25, 8.8	2
	37	07790	(003039-)	Nut, Hex, Flng, M6 X 1.00	1

Fig. 31 - Engine Radiator Hose Group (003039-)

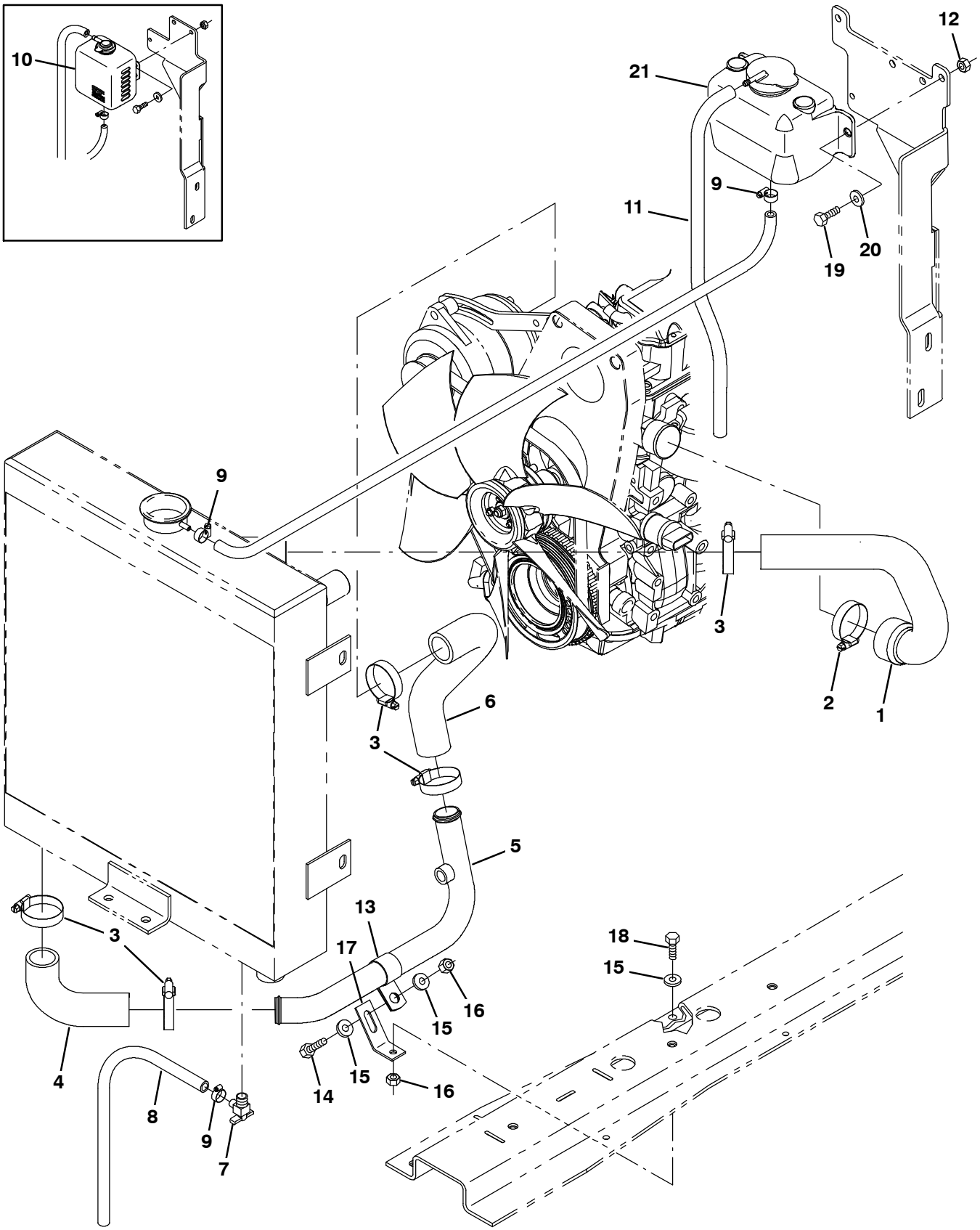

356021

Fig. 31 - Engine Radiator Hose Group (003039-)

Ref.	Part No.	Serial Number	Description	Qty.
1	1014747	(003039-)	Hose, Coolant, Mold, 1.25id To 1.62id	1
2	22297	(003039-)	Clamp, Hose, Wormdrive, 1.56-2.50d, .50w	1
3	11531	(003039-)	Clamp, Hose, Wormdrive, 1.06-2.00d, .56w	5
4	1007482	(003039-)	Hose, Rbr, E90, 1.25id 1.25id 04.2 03.1	1
5	1043322	(003039-)	Tube, Coolant, 1.3d, Lower	1
6	1019265	(003039-)	Hose, Radiator, Lower, Mold	1
7	51305	(003039-)	Fitting, Draincock, E90, .25npt	1
8	73471	(003039-)	Hose, Pvc, Clr, 0.38id 0.56od 022.0l	1
9	43844	(003039-)	Clamp, Hose, Wormdrive, 0.25-0.62d, .31w	3
10	1023853	(003039-003122)	Tank, Coolant, 03.30w 4.7hi 04.7l,1liter	1
11	1015041	(003039-003122)	Hose, Afmkt, Coolant Recvy, 05ft	1
11	87738	(003123-)	Hose, Fuel, 0.18id, 29.0l	1
12	08709	(003039-)	Nut, Hex, Lock, M8 X 1.25, Nl	2
13	58366	(003039-)	Clamp, Cable, Stl, 1.25d X 1.00w, 1hole	1
14	09010	(003039-)	Screw, Hex, M8 X 1.25 X 25, Ss	1
15	01685	(003039-)	Washer, Flat, 0.38b 0.88d .08, Ss	3
16	08713	(003039-)	Nut, Hex, Lock, M8 X 1.25, Nl, Ss	2
17	1035214	(003039-)	Bracket, Tube, Coolant	1
18	09740	(003039-)	Screw, Hex, M8 X 1.25 X 20, Ss	1
19	16931	(003039-)	Screw, Hex, M8 X 1.25 X 20, 8.8	2
20	32491	(003039-)	Washer, Flat, 0.31, Std	2
21	1054382	(003123-)	Tank, Coolant, 03.6w 04.1hi 05.5l,1liter	1

Fig. 32 - Battery and Electrical Group

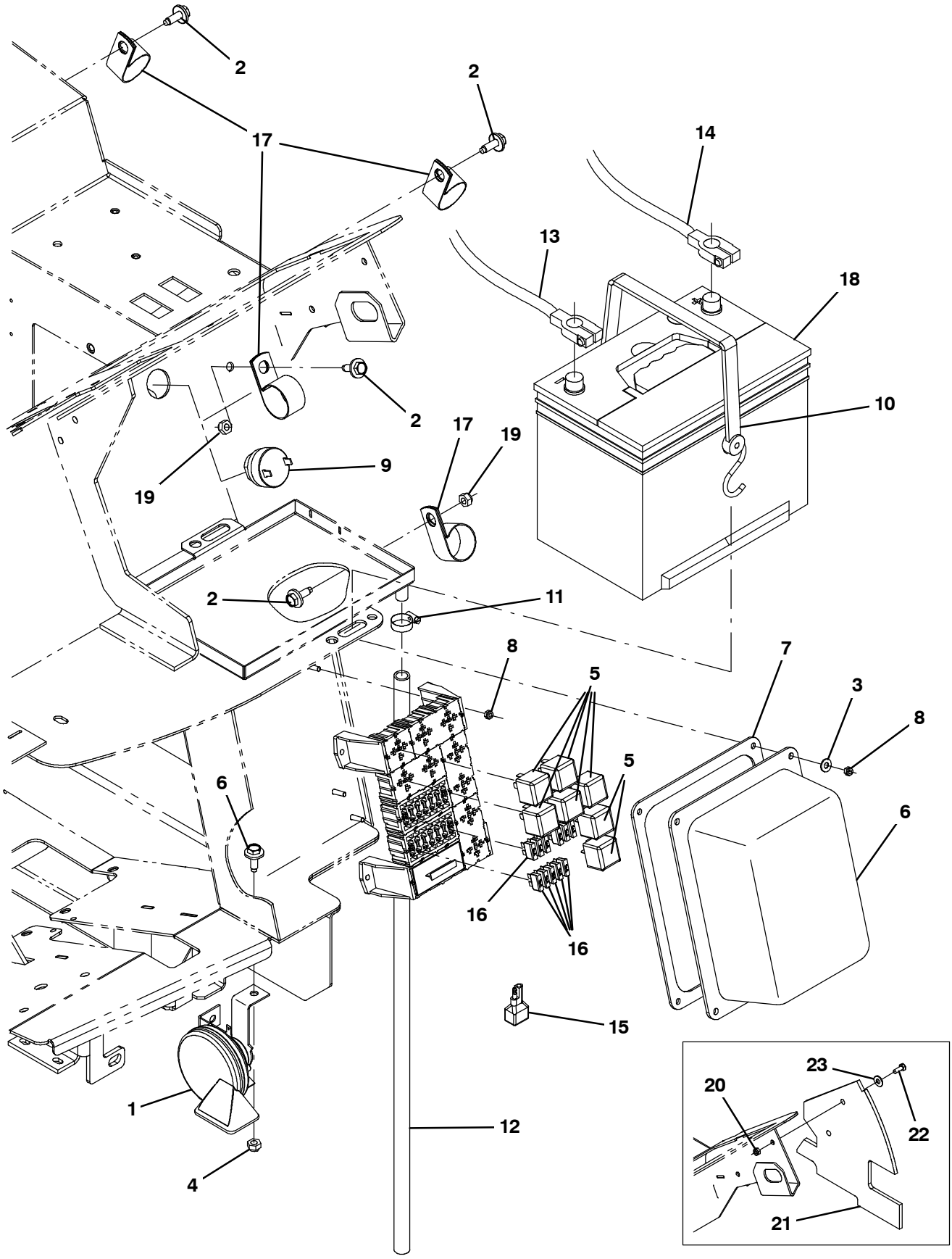

354425 - G/LP

Fig. 32 - Battery and Electrical Group

Ref.	Part No.	Serial Number	Description	Qty.
1	369704	(000000-)	Horn, 12vdc, Dba [Wolo]	1
2	1037346	(000000-)	Screw, Hex, M8 X 1.25 X 25, 9.8, Sems	5
3	19066	(000000-)	Washer, Flat, #10	4
4	08709	(000000-)	Nut, Hex, Lock, M8 X 1.25, Nl	1
5	57804	(000000-)	Relay, 12vdc, 40a, Spdt N/O	7
6	1024274	(000000-)	Cover, Fuse, Block	1
7	1026576	(000000-)	Gasket, Cover, Fuse Block	1
8	06549	(000000-)	Nut, Hex, Lock, M5 X 0.8, Nl	8
9	1021290	(000000-)	Alarm, Warning [Sonalert, St628]	1
10	33671	(000000-)	Strap, Rbr, Tie-Down, 2/Hooks 19.0l	1
11	54333	(000000-)	Clamp, Hose, Wormdrive, 0.31-0.88d, .31w	1
12	20778	(000000-)	Hose, Pvc, Clr, 0.50id 0.69od 30.00l	1
13	60295	(000000-)	Cable, Battery, 02ga 60.0l Blk .41ring	1
14	68869	(000000-)	Cable, Battery, 02ga 48.0l Red .41ring	1
15	222290	(000000-)	Diode, Ele, Plug	1
16	762514	(000000-)	Fuse, 015a	14
17	53466	(000000-)	Clamp, Cable, Stl, 1.50d X 1.00w, 1h	4
18	10137	(000000-)	Battery, 12vdc, 0475cca, Ah, Wet	1
19	08709	(000000-)	Nut, Hex, Lock, M8 X 1.25, Nl	2
20	08708	(000000-001278)	Nut, Hex, Lock, M6 X 1.0, Nl	2
21	1027228	(000000-001278)	Seal, Radiator, Upper	1
22	06942	(000000-001278)	Screw, Hex, M6 X 1.0 X 16, 8.8	2
23	32490	(000000-001278)	Washer, Flat, 0.25 Std	2

Fig. 33 - Wheel Group, Front Drive

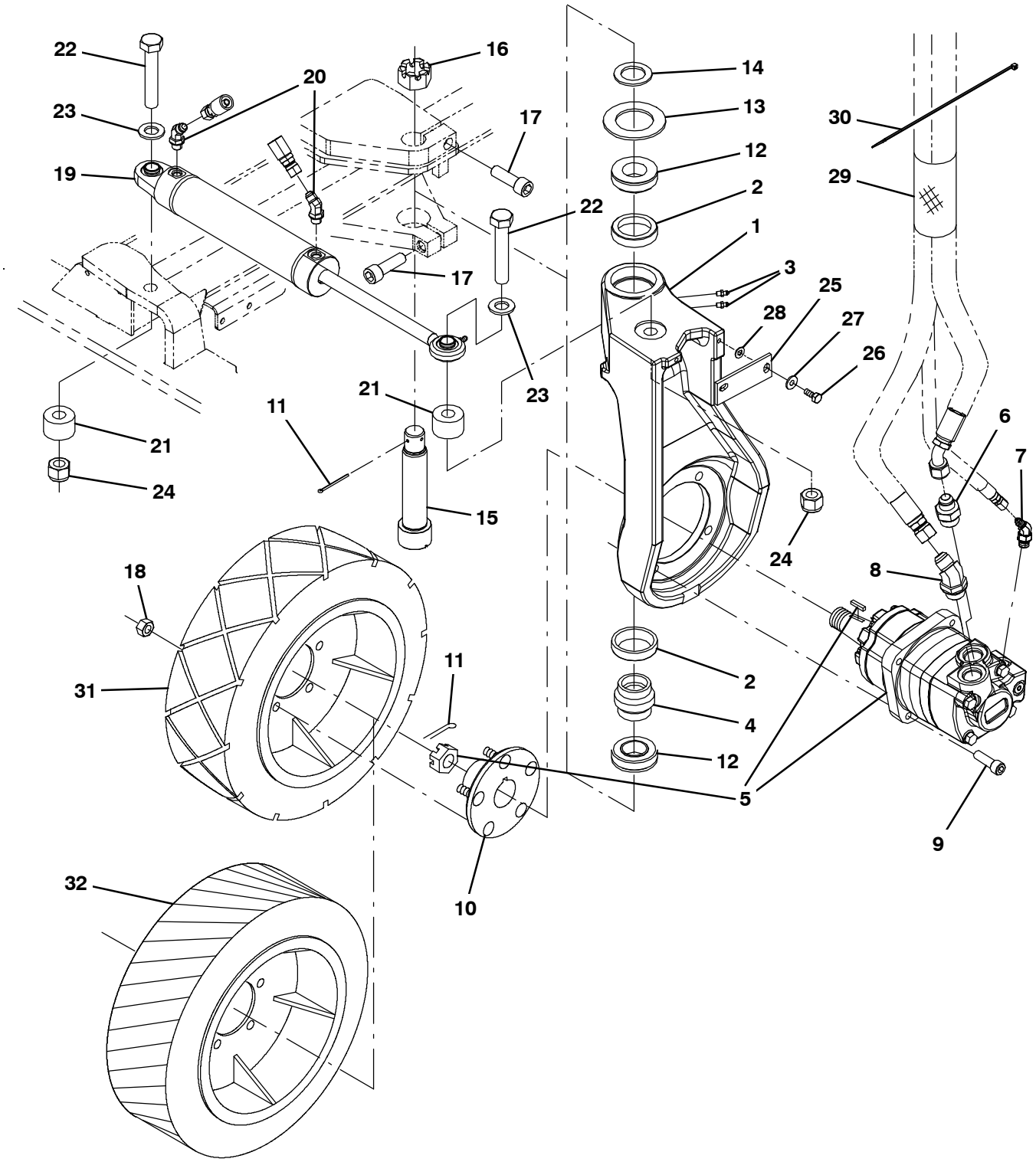

354426

Fig. 33 - Wheel Group, Front Drive

	Ref.	Part No.	Serial Number	Description	Qty.
	1	1037940	(000000-)	Housing, Sppt, Rear Wheel	1
	2	51338	(000000-)	Bearing, Cup, 2.56d 0.55w	2
	3	47801	(000000-)	Fitting, Grease, Str Pm04 .63l	2
	4	374560	(000000-)	Seal, Drive, Rear, Grease Cav	1
	5	379609	(000000-)	Motor, Hyd, Gear, Int 19.0 Bi-Dir 3000 (See Breakdowns)	1
	6	42223	(000000-)	Fitting, Hyd, Str, Jm10/Om12	1
	7	393215	(000000-)	Fitting, Hyd, E45, Jm04/Om06	1
	8	1024249	(000000-)	Fitting, Hyd, E45, Jm10/Om12	1
	9	19583	(000000-)	Screw, Soc, .50-13 X 1.50, Al	4
▽	10	54087	(000000-)	Hub Assy, Wheel, 5 Bolt 4.50bc Taper B	1
▲		32126	(000000-)	Stud, Wheel, .50-20 X 1.50l, 0.370th	5
	11	08180	(000000-)	Pin, Cotter, .125 X 2.00	2
	12	51339	(000000-)	Bearing, Cone, 1.38b 0.71w	2
	13	374563	(000000-)	Washer, Flat, 2.16b 3.50d .16, Felt	1
	14	54051	(000000-)	Washer, Flat, 1.39b 2.12d .13, Stl	1
	15	73281	(000000-)	Bolt, Shld, 1.37d X 5.13l,1.1-18 Drilled	1
	16	54052	(000000-)	Nut, Hex, Sltd, 1.12-18	1
	17	72926	(000000-)	Screw, Soc, M16 X 2.0 X 50, 12.9	2
	18	24339	(000000-)	Nut, Wheel, .50-20 X 60 Angle	5
	19	1017903	(000000-)	Cylinder, Hyd, 2.0b,15.2l,09.00strk,3000	1
	20	47522	(000000-)	Fitting, Hyd, E45, Jm06/Om06	2
	21	71340	(000000-)	Tube, Rnd, 1.75d 0.77b 01.1l, Stl, Pntd	2
	22	71341	(000000-)	Screw, Hex, .75-10 X 4.00, 5	2
	23	39350	(000000-)	Washer, Flat, 0.75 Sae	2
	24	32987	(000000-)	Nut, Hex, Lock, .75-10, Nl	2
	25	58842	(000000-)	Bar, Flat, Stl 0.19, 01.50 X 04.1l	1
	26	16931	(000000-)	Screw, Hex, M8 X 1.25 X 20, 8.8	2
	27	32491	(000000-)	Washer, Flat, 0.31, Std	2
	28	39349	(000000-)	Washer, Flat, 0.31 Sae	1
	29	57315	(000000-)	Sleeve, Nyl, #37 05.0l	1
	30	49266	(000000-)	Tie, Cable, Nyl, 07.3l .19w 1.8 Max D	1
	31	1059343	(000000-)	Tire, Drive, Scrbr, Non-Skid, 18.0X6.0	1
	31	1061973	(000000-)	Tire, Drive, Scrbr, Pu, Grey, 18.0X6.0 (Optional Polyurethane)	1

Fig. 34 - Wheel Group, Rear

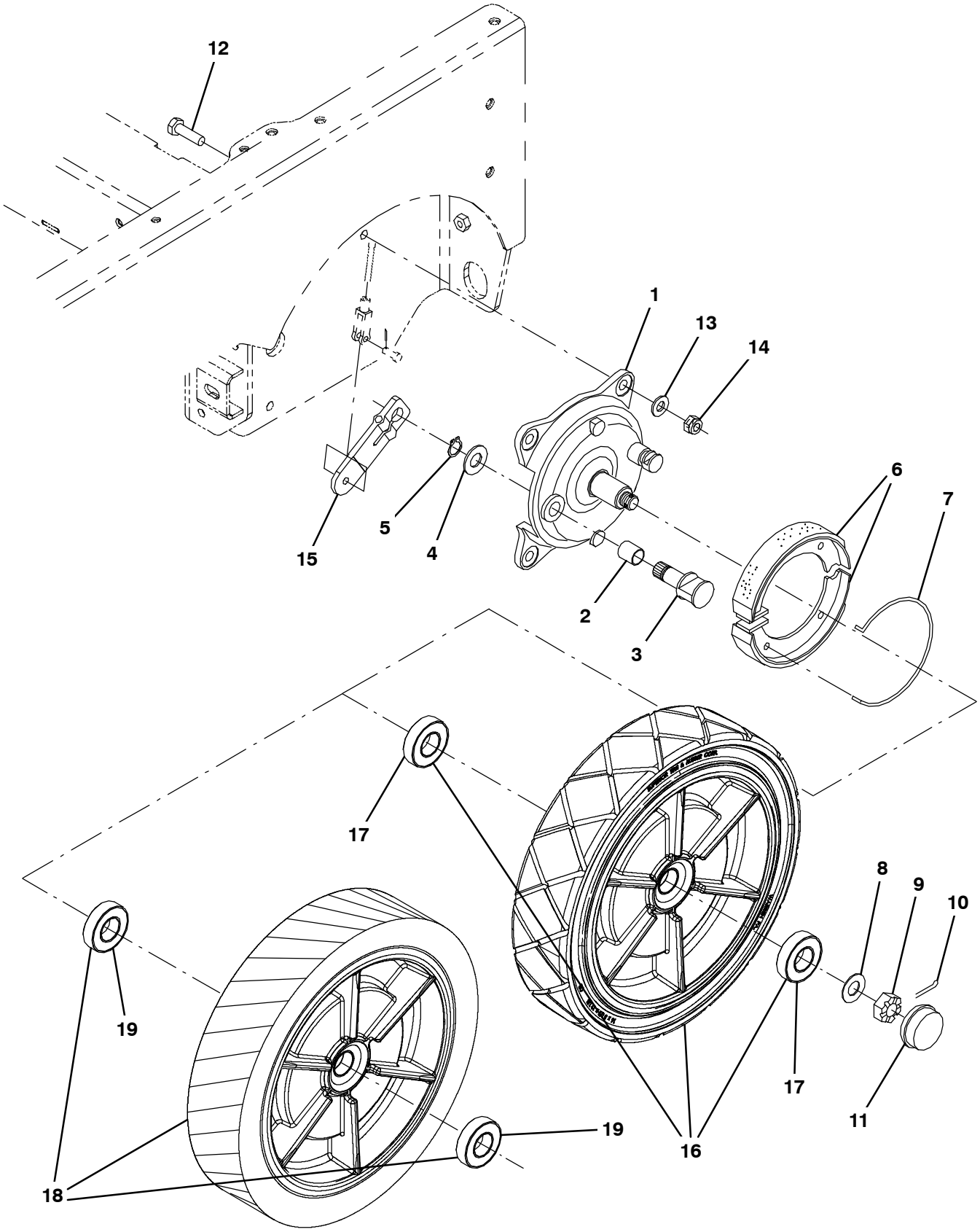

354427

Fig. 34 - Wheel Group, Rear

	Ref.	Part No.	Serial Number	Description	Qty.
▽		360023	(000000–)	Brake Assy, Drum, Mech, 07.0d 1.2w	2
▲	1	360270	(000000–)	Plate, Backing, Brake	1
▲	2	360271	(000000–)	Bushing, Sleeve, 0.78b 0.86d 0.93l, Bnz	1
▲	3	360272	(000000–)	Cam, Plt, Brake [Nickel]	1
▲	4	360273	(000000–)	Washer, Flat, M21.0b X 37d X 3	1
▲	5	360274	(000000–)	Retainer, Ring, Brake	1
▲	6	360275	(000000–)	Shoe, Brake, 180 X 30mm	2
▲	7	360276	(000000–)	Spring, Wir, 0.25d, Return, Brake	1
	8	49145	(000000–)	Washer, Flat, 0.76b 1.50d .06, Ss	2
	9	86659	(000000–)	Nut, Hex, Sltd, .75–16	2
	10	08171	(000000–)	Pin, Cotter, .156 X 2.00	2
	11	54390	(000000–)	Cap, Hub, Dust 2.57d 0.77l	2
	12	06969	(000000–)	Screw, Hex, M12 X 1.75 X 40, 8.8	8
	13	32486	(000000–)	Washer, Flat, 0.50 Sae	8
	14	08711	(000000–)	Nut, Hex, Lock, M12 X 1.75,Nl	8
	15	360802	(000000–)	Arm, Lever, Brake, 4.1 [Knott]	2
▽	16	1059349	(000000–)	Tire, Idler, Scrbr, Blk, 16.0X3.5	2
▲	17	360074	(000000–)	Bearing, Ball, 1.18b 2.44d 0.63w	2
▽	18	1061974	(000000–)	Tire, Idler, Scrbr, Pu, Grey, 16.0X3.5 (Optional Polyurethane)	2
▲	19	360074	(000000–)	Bearing, Ball, 1.18b 2.44d 0.63w	2

Fig. 35 - Brake Pedal Linkage Group

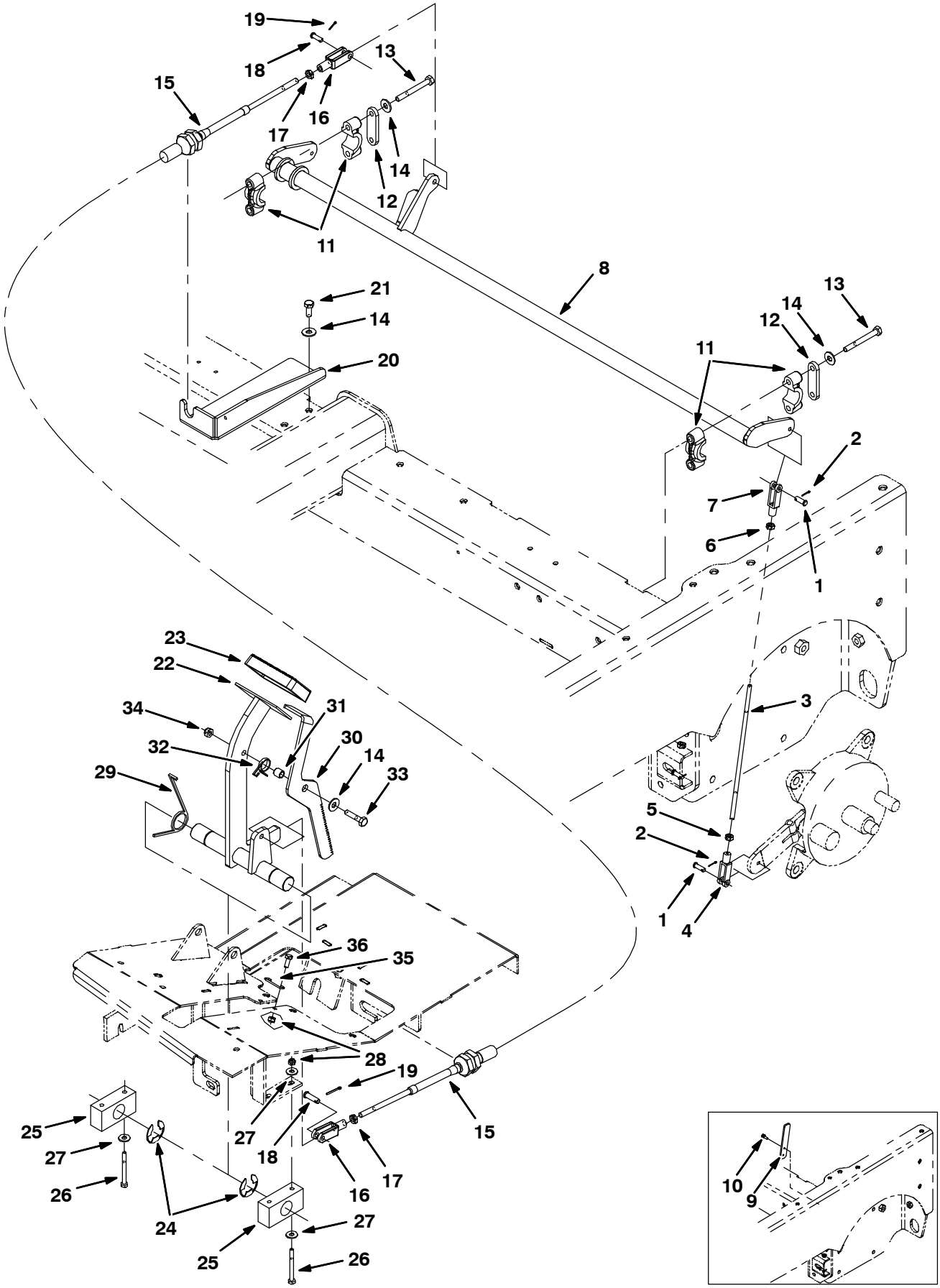

354428

Fig. 35 - Brake Pedal Linkage Group

Ref.	Part No.	Serial Number	Description	Qty.
1	14605	(000000-)	Pin, Clevis, 0.25d X 0.75l	4
2	08170	(000000-)	Pin, Cotter, .062 X 0.50	4
3	364347	(000000-)	Rod	2
4	14595-1	(000000-)	Clevis, Adj, 0.25 Pin, 0.25-28 Rh, Pl	2
5	364948	(000000-)	Nut, Hex, Std, .25-28, Lh	2
6	01714	(000000-)	Nut, Hex, Std, .25-28	2
7	364864	(000000-)	Clevis, Adj, 0.25pin, 0.25-28left Pl	2
8	1022031	(000000-)	Shaft Wldt, Brake	1
9	1026025	(000000-xxxxxx)	Plate, Stop, Brake	2
10	361339	(000000-xxxxxx)	Screw, Hex, M6 X 1.0 X 16, Fmg	4
11	381502	(000000-)	Bearing, Split, 1.00b	4
12	382224	(000000-)	Plate, Sppt	2
13	39279	(000000-)	Screw, Hex, M8 X 1.25 X 70, 8.8	4
14	32491	(000000-)	Washer, Flat, 0.31, Std	7
15	1025495	(000000-)	Cable, Push / Pull, 063.0l 4.0, .31-24	1
16	58311	(000000-)	Clevis, Adj, 0.31pin, 0.31-24	2
17	20170	(000000-)	Nut, Hex, Jam, .31-24	2
18	69582	(000000-)	Pin, Clevis, 0.31d X 1.00l	2
19	08179	(000000-)	Pin, Cotter, .094 X 1.00	2
20	1022736	(000000-)	Bracket, Mtg, Cable	1
21	16931	(000000-)	Screw, Hex, M8 X 1.25 X 20, 8.8	2
22	1022243	(000000-)	Shaft Wldt, Pedal, Brake	1
23	51109	(000000-)	Pad, Pedal, Brake, 3.96l 2.36w 0.75	1
24	23788	(000000-)	Ring, Retaining, Ext, 0.98d, [E-Ring]	2
25	86751	(000000-)	Bearing, Pillowblock, 1.02b [Solid Pye]	2
26	06548	(000000-)	Screw, Hex, M6 X 1.0 X 60, 8.8	4
27	32490	(000000-)	Washer, Flat, 0.25 Std	8
28	08708	(000000-)	Nut, Hex, Lock, M6 X 1.0, Nl	6
29	54607	(000000-)	Spring, Tors, 1.13id .12wir 02.3coil Rh	2
30	1025487	(000000-)	Pedal, Brake, Lock	1
31	46563	(000000-)	Bushing, Sleeve, 0.37b 0.50d 0.50l, Oib	1
32	59009	(000000-)	Spring, Tors, 0.75id .06wir 02.8coil	1
33	06955	(000000-)	Screw, Hex, M8 X 1.25 X 35, 8.8	1
34	08709	(000000-)	Nut, Hex, Lock, M8 X 1.25, Nl	1
35	71367	(000000-)	Spring, Wir, 0.08d, Brake, Parking	1
36	06942	(000000-)	Screw, Hex, M6 X 1.0 X 16, 8.8	2

Fig. 36 - Directional Pedal and Linkage Group

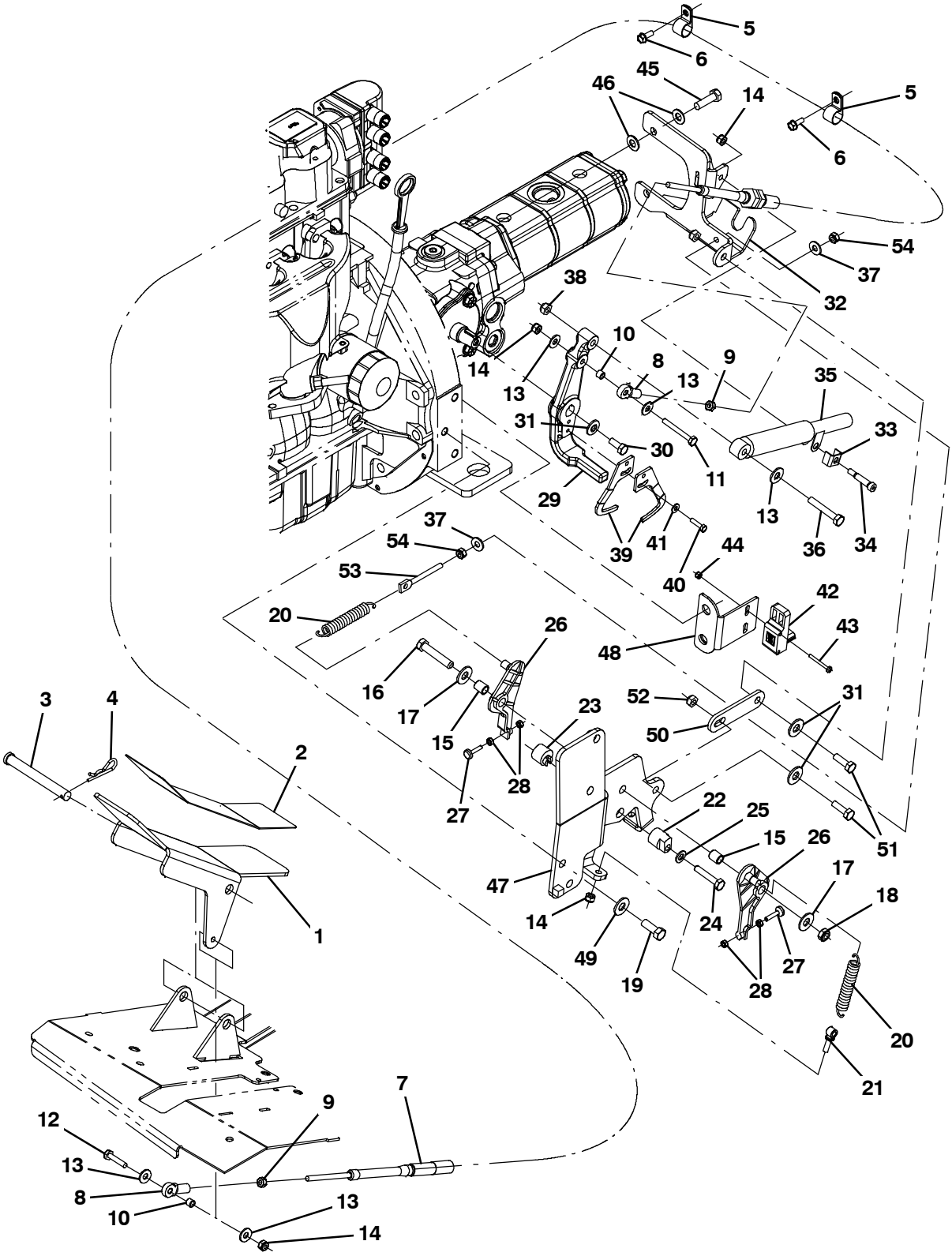

Ref.	Part No.	Serial Number	Description	Qty.
1	1025140	(000000-)	Pedal, Propel	1
2	58819	(000000-)	Tread, Non-Skid, 03.0w 11.6l	1
3	59668	(000000-)	Pin, Clevis, 0.50 D X 4.50l	1

354429

Fig. 36 - Directional Pedal and Linkage Group

Ref.	Part No.	Serial Number	Description	Qty.
4	08182	(000000-)	Pin, Cotter, .125 X 1.00	1
5	67767	(000000-)	Clamp, Cable, Stl, 0.69d X 0.62w, 1h	2
6	361339	(000000-)	Screw, Hex, M6 X 1.0 X 16, Fmg	2
7	1022345	(000000-)	Cable, Push / Pull, 098.0l .25-28/.25-28	1
8	68866	(000000-)	Rod-End, .25-28rh Fem 0.25b [Teflon]	2
9	01714	(000000-)	Nut, Hex, Std, .25-28	2
10	65441	(000000-)	Tube, 00.38d 00.26b 00.3l Stl Plt	2
11	41399	(000000-)	Screw, Hex, .25-20 X 2.25, Ss	1
12	42180	(000000-)	Screw, Hex, .25-20 X 1.75, Ss	1
13	32490	(000000-)	Washer, Flat, 0.25 Std	5
14	41169	(000000-)	Nut, Hex, Lock, .25-20, Nl, Ss	4
15	63234	(000000-)	Tube, 00.50d 00.38b 00.6l Stl	2
16	42467	(000000-)	Screw, Hex, .38-16 X 2.00, Ss	1
17	32492	(000000-)	Washer, Flat, 0.38 Std	2
18	36643	(000000-)	Nut, Hex, Lock, .38-16, Nl, Thin	1
19	21197	(000000-)	Screw, Hex, .38-16 X 1.00, 5	2
20	11842	(000000-)	Spring, Extn, 0.75od X 0.12wir, 4.3l	2
21	48079	(000000-)	Bolt, Eye, .25-20 X 1.40 X .25 Eye	1
22	53947	(000000-)	Cam, Centering, Pintle	1
23	54655	(000000-)	Cam, Centering, Pintle	1
24	74440	(000000-)	Screw, Hex, M8 X 1.25 X 40, Ss, Nl	1
25	39349	(000000-)	Washer, Flat, 0.31 Sae	1
26	53953	(000000-)	Arm, Cntrl, Pintle, Centering	2
27	54205	(000000-)	Bumper, Rbr, 0.5d 0.16t M5 X 08	2
28	50335	(000000-)	Nut, Hex, Std, M5 X 0.8, 8	4
29	1027233	(000000-)	Arm, Pintle	1
30	83879	(000000-)	Screw, Hex, .31-24 X 0.75, Nl	1
31	41186	(000000-)	Washer, Belleville, .31	3
32	1027313	(000000-)	Bracket Wldt, Propel, Pintle	1
33	84170	(000000-)	Bracket, Retainer, Safety	1
34	16213	(000000-)	Bolt, Shld, .31d X 1.00, .25-20	1
35	73411	(000000-)	Shock Absorber, 2.3 Strk	1
36	39278	(000000-)	Screw, Hex, M8 X 1.25 X 50, 8.8	1
37	32491	(000000-)	Washer, Flat, 0.31 Std	2
38	08709	(000000-)	Nut, Hex, Lock, M8 X 1.25, Nl	1
39	1022787	(000000-)	Arm [Positioning]	2
40	09252	(000000-)	Screw, Hex, M5 X 0.8 X 20, 8.8	2
41	01683	(000000-)	Washer, Flat, #10 Ss	2
42	1022779	(000000-)	Sensor, Spd / Dir, 6-30vdc	1
43	09198	(000000-)	Screw, Pan, M4 X 0.7 X 35, Ss	2
44	33932	(000000-)	Nut, Hex, Lock, M4 X 0.7, Nl, Ss	2
45	46559	(000000-)	Screw, Hex, .38-16 X 1.25, Nl	2
46	32485	(000000-)	Washer, Flat, 0.38 Sae	4
47	1022140	(000000-)	Bracket, Propel, Gas/Lpg	1
48	1022798	(000000-)	Bracket, Mtg, Cyl	1
49	41187	(000000-)	Washer, Flat, Belleville, .38	2
50	1032399	(000000-)	Strap, Sppt	1
51	09010	(000000-)	Screw, Hex, M8 X 1.25 X 25, Ss	2
52	08713	(000000-)	Nut, Hex, Lock, M8 X 1.25, Nl, Ss	2
53	386088	(000000-)	Bolt, Eye, M8X1.25, 2.75L	1
54	07786	(000000-)	Nut, Hex, Std, M8 X 1.25, Ss	2

Fig. 37 - Hopper Lift Arms Group

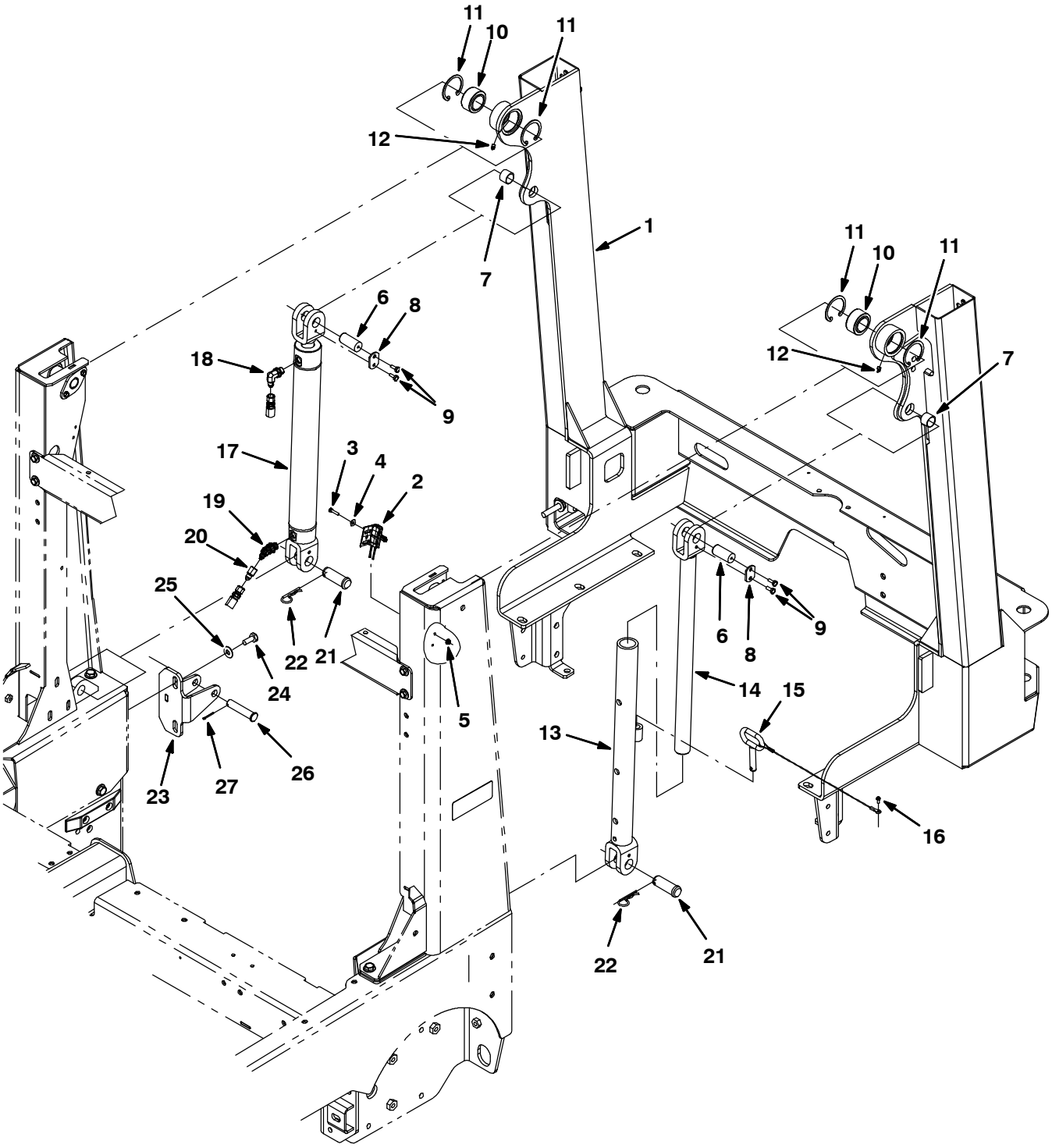

354430

Fig. 37 - Hopper Lift Arms Group

Ref.	Part No.	Serial Number	Description	Qty.
1	1018241	(000000-)	Frame Wldt, Lift, Hppr	1
2	23211	(000000-)	Switch, Snap, 15a No, Rlr	1
3	09252	(000000-)	Screw, Hex, M5 X 0.8 X 20, 8.8	2
4	19066	(000000-)	Washer, Flat, #10	2
5	07789	(000000-)	Nut, Hex, Flng, M5 X 0.8	2
6	1018226	(000000-)	Pin, 0.87d 01.8l, 1/M6 X 1.0, 1cham,Stl	2
7	364587	(000000-)	Bushing, Sleeve, 0.88b 1.00d 0.75l, Bnz	2
8	72897	(000000-)	Plate, Pin, Clevis, Upper	2
9	1040467	(000000-)	Screw, Hex, M6 X 1.0 X 20, 9.8, Sems	4
10	42120-1	(000000-)	Bearing, Self Align, 1.25b 2.00d	2
11	59542	(000000-)	Ring, Retaining, Int, 2.00d	4
12	07259	(000000-)	Fitting, Grease, Str Pm04 .47l	2
13	1018260	(000000-)	Tube Wldt, Arm, Safety	1
14	1018262	(000000-)	Rod Wldt, Arm, Safety	1
15	1018266	(000000-)	Pin, Arm, Safety	1
16	16944	(000000-)	Screw, Hex, M4 X 0.7 X 10, Fmg	1
17	1029646	(000000-)	Cylinder, Hyd, 2.0B 24.1L 15.00Strk 3000	1
18	47638	(000000-)	Fitting, Hyd, E90, Jm04/Om06	1
19	393215	(000000-)	Fitting, Hyd, E45, Jm04/Om06	1
20	1025904	(000000-)	Fitting, Hyd, Rst, Jf04/Jm04, .028	1
21	1018227	(000000-)	Pin, Clevis, 0.88d X 2.25l	2
22	02942	(000000-)	Pin, Cotter, Hair, 0.62d .120 Wir	2
23	1018275	(000000-)	Plate Wldt, Arm, Stop	1
24	09028	(000000-)	Screw, Hex, M10 X 1.5 X 25, Ss	2
25	01686	(000000-)	Washer, Flat, 0.44b 1.00d .08, Ss	2
26	1018276	(000000-)	Pin, Clevis, 0.62d X 2.91l	1
27	08179	(000000-)	Pin, Cotter, .094 X 1.00	1

Fig. 38 - Hopper and Debris Screen Group

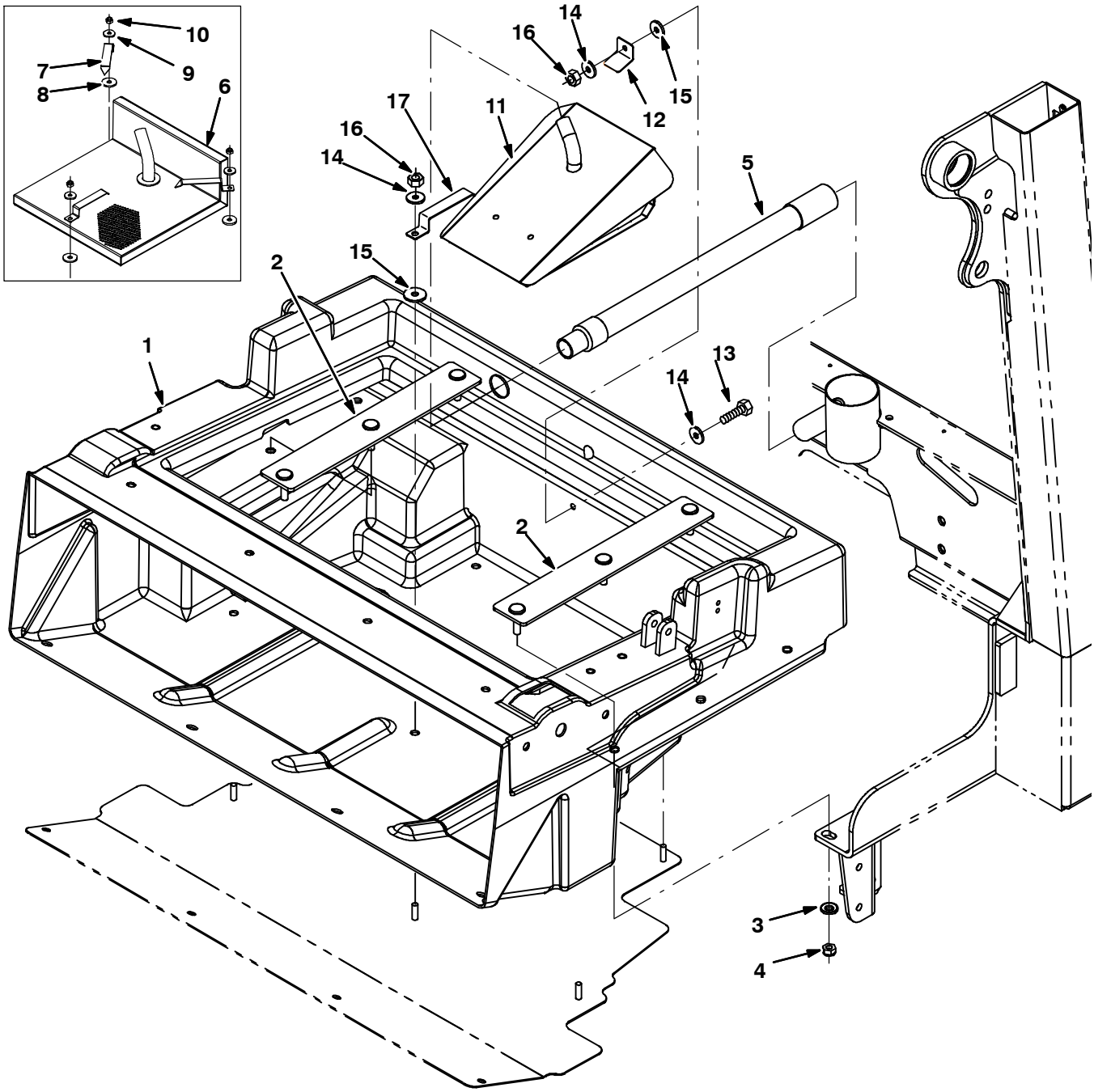

354431

Fig. 38 - Hopper and Debris Screen Group

Ref.	Part No.	Serial Number	Description	Qty.
1	1018300	(000000-)	Hopper, Debris, Rm-Hg, Trimmed	1
2	1018272	(000000-)	Bar, Mtg, Hppr	2
3	763042	(000000-)	Washer, Flat, Belleville, M10	6
4	08714	(000000-)	Nut, Hex, Lock, M10 X 1.5, Nl, Ss	6
5	1018239	(000000-)	Hose Assy, W/1cuff, 1.0d 09l 1.0/	1
6	1018235	(000000-002280)	Filter Wldt, Hppr (Replaced By 9003774)	1
7	1018258	(000000-002280)	Spring, Flat, Retainer, Screen	3
8	222268	(000000-002280)	Washer, Flat, 0.38b 1.25d .12, Neo	3
9	1017218	(000000-002280)	Washer, Flat, 0.32b 1.00d .12, Ss	3
10	08713	(000000-002280)	Nut, Hex, Lock, M8 X 1.25, Nl, Ss	3
11	1039163	(002281-)	Screen Wldt, Hppr	1
12	1039215	(002281-)	Angle, Retainer	1
13	09010	(002281-)	Screw, Hex, M8 X 1.25 X 25, Ss	1
14	1017218	(002281-)	Washer, Flat, 0.32b 1.00d .12, Ss	3
15	222268	(002281-)	Washer, Flat, 0.38b 1.25d .12, Neo	2
16	08713	(002281-)	Nut, Hex, Lock, M8 X 1.25, Nl, Ss	2
17	1044323	(002281-)	Spring, Flat, Retainer, Angled Screen	1

Fig. 39 - Hopper Cover and Dust Filter Group

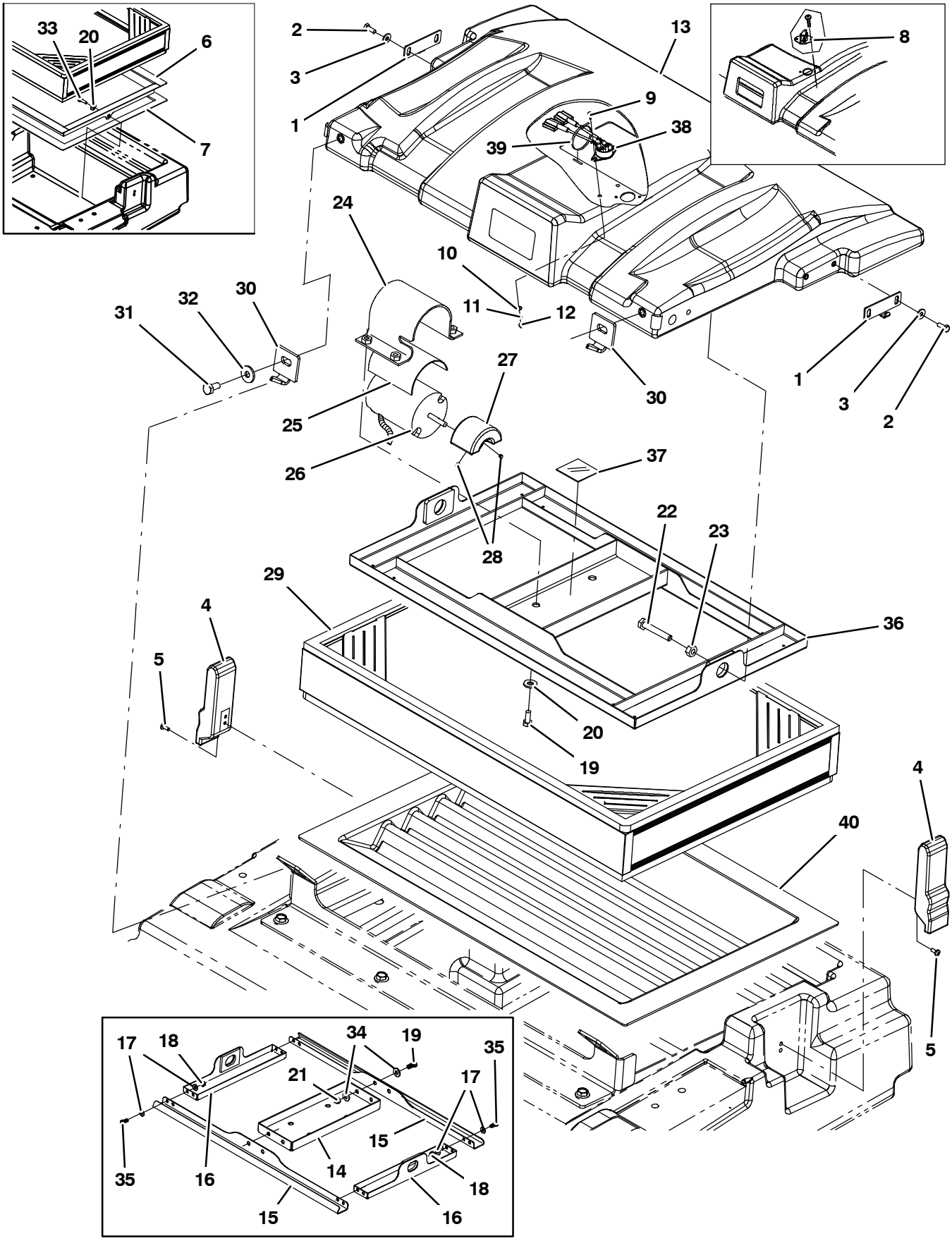

354432

Fig. 39 - Hopper Cover and Dust Filter Group

Ref.	Part No.	Serial Number	Description	Qty.
1	1041984	(000000-)	Bracket, Cover, Hppr	2
2	15678	(000000-)	Screw, Hex, M6 X 1.0 X 16, Ss	4
3	01684	(000000-)	Washer, Flat, 0.25, Ss	4
4	360824	(000000-)	Latch	2
5	09200	(000000-)	Screw, Pan, M5 X 0.8 X 12, Ss	4
6	1033591	(000000-002048)	Tray Wldt, Perma-filter (Replaced By none)	1
7	1015220	(000000-002048)	Seal, Afmkt, Ure, Adh, 0.38, 0.75w 08ft (Replaced By none)	1
8	367679	(000000-002040)	Switch, Thermal, 160Deg, Spdt (Replaced by 9003444)	1
9	06922	(000000-)	Screw, Pan, M3 X 0.5 X 20, 4.8	2
10	19064	(000000-)	Washer, Flat, #06	2
11	32975	(000000-)	Washer, Lock, Int, #06	2
12	01754	(000000-)	Nut, Hex, Std, M3 X 0.5, 8	2
13	1041006	(000000-)	Cover, Hppr	1
14	1018203	(000000-001356)	Plate, Shakr	1
15	360952	(000000-001356)	Plate, Shakr, Bar	2
16	1017944	(000000-001356)	Plate Wldt, Shakr, Side	2
17	32483	(000000-001356)	Washer, Flat, 0.25 Sae	16
18	08712	(000000-001356)	Nut, Hex, Lock, M6 X 1.0, Ss, Nl	8
19	09740	(000000-)	Screw, Hex, M8 X 1.25 X 20, Ss	8
20	01685	(000000-)	Washer, Flat, 0.31, Ss	6
21	08713	(000000-)	Nut, Hex, Lock, M8 X 1.25, Nl, Ss	4
22	06957	(000000-002040)	Screw, Hex, M8 X 1.25 X 60, 8.8	2
22	06963	(002041-)	Screw, Hex, M10 X 1.50 X 60, 8.8	2
23	39311	(000000-002040)	Nut, Hex, Std, M8 X 1.25	2
23	39312	(002041-)	Nut, Hex, Std, M10 X 1.50	2
24	1037671	(000000-)	Strap, Mtg, Motor, .124.00W	1
25	36658	(000000-)	Strip, Rbr, 0.06 04.00w 05.0l Neo/60	1
26	1041920	(000000-003408)	Motor, Ele [12vdc, Shaker]	1
26	1059542	(003409-)	Motor, Ele 12Vdc, Shakr	1
27	1049242	(000000-003408)	Weight, Eccentric	1
27	1053320	(003409-)	Weight, Eccentric	1
28	20634	(000000-)	Screw, Set, #10-24 X 0.25, Nl	2
29	1048295AM	(000000-)	Filter, Panl, Syn, 4.2 X 20.0 X 30.0	1
30	1018207	(000000-)	Bar, Mtg, Hppr Cover	2
31	09291	(000000-)	Screw, Hex, M10 X 1.5 X 20, Ss	2
32	1014563	(000000-)	Washer, Flat, 0.40b 1.12d .12, Ss	2
33	39277	(000000-)	Screw, Hex, M8 X 1.25 X 25, 8.8	2
34	01685	(000000-001356)	Washer, Flat, 0.31, Ss	8
35	15678	(000000-001356)	Screw, Hex, M6 X 1.0 X 16, Ss	8
36	1037235	(001357-)	Shaker Wldt	1
37	36661	(001357-)	Strip, Rbr, 0.06 01.00W 04.0L	1
38	1036611	(002041-)	Switch, Temp [160F]	1
39	763116	(002041-)	Tie, Cable, Nyl, 15.3L . W 4.5 Max D	1
40	1037947	(002140-)	Tray, Perma-Filter	1

Fig. 40 - Hopper Bumper Group

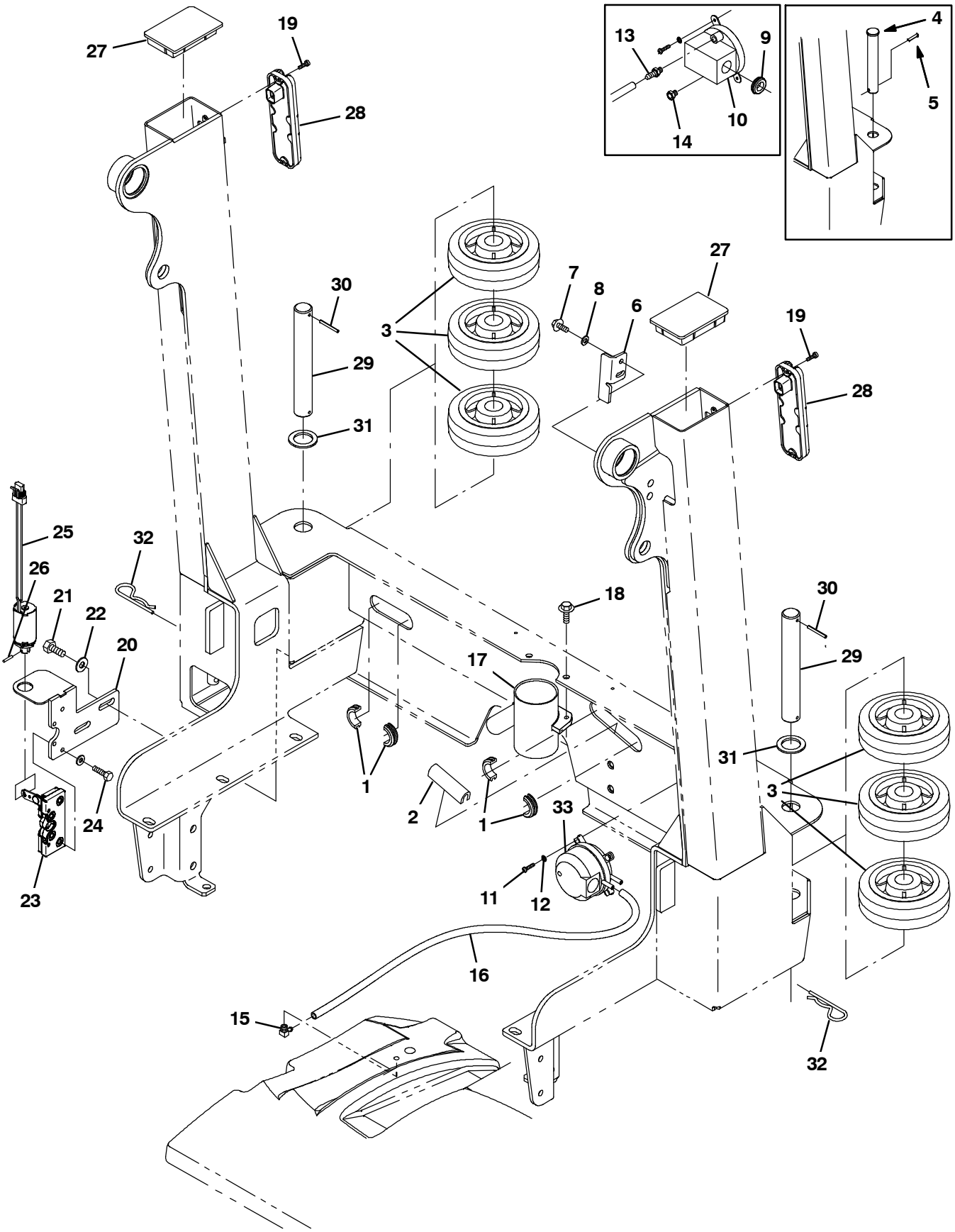

354433

Fig. 40 - Hopper Bumper Group

Ref.	Part No.	Serial Number	Description	Qty.
1	10632-1	(000000-xxxxxx)	Grommet, Rbr, 1.06id, F/1.4h, .19 Matl	2
1	10632-13	(xxxxxx-)	Grommet, Rbr, 1.50id, F/1.8h, .19 Matl	2
2	50646	(000000-)	Molding, Trim, Pvc,.18-.31 07.5l	1
3	1021047	(000000-)	Wheel, 06.0d 2.00w 1.19b, Gray Rbr	6
4	9006334	(000000-003062)	Pin Kit, Wheel, Ci [M20/T20/M30]	2
5	08171	(000000-003062)	Pin, Cotter, .156 X 2.00	2
6	1018240	(000000-)	Bracket, Mtg, Switch	1
7	361339	(000000-)	Screw, Hex, M6 X 1.0 X 16, Fmg	2
8	32483	(000000-)	Washer, Flat, 0.25 Sae	2
9	10632-4	(000000-003259)	Grommet, Rbr, 0.62id, F/0.9h, .06 Matl	1
10	39924	(000000-003259)	Switch, Press, Spdt 0008psi	1
11	12323	(000000-)	Screw, Pan, M4 X 0.7 X 20, Ss	2
12	02938	(000000-)	Washer, Lock, Int, #08, Ss	2
13	40607	(000000-003259)	Fitting, Brs, Str, Bm03/Pm02	1
14	82739	(000000-003259)	Fitting, Brs, Breather [02mp]	1
15	32183	(000000-)	Fitting, Brs, E90, Pm02/Bm03	1
16	1031575	(000000-)	Hose, Afmkt, Vacuum, 0.16id, 03ft	1
17	1036240	(000000-)	Tube, Vacuum	1
18	1037346	(000000-)	Screw, Hex, M8 X 1.25 X 25, 9.8, Sems	2
19	06928	(000000-)	Screw, Pan, M4 X 0.7 X 20, 4.8	4
20	1018280	(000000-)	Plate Wldt, Mtg, Solenoid	1
21	09028	(000000-xxxxxx)	Screw, Hex, M10 X 1.5 X 25, Ss	2
21	12309	(xxxxxx-)	Screw, Hex, M12 X 1.75 X 30, Ss	2
22	32492	(000000-xxxxxx)	Washer, Flat, 0.38 Std	2
22	32486	(xxxxxx-)	Washer, Flat, 0.50, Sae	2
23	21623	(000000-)	Latch	1
24	06944	(000000-)	Screw, Hex, M6 X 1.0 X 25, 8.8	4
25	1018274	(000000-)	Solenoid, Pull, 12vdc, Damper	1
26	20021	(000000-)	Pin, Roll, .125 D X 0.75l, .125/.129	1
27	1018293	(000000-)	Cap, Arm, Lift	2
28	1018208	(000000-)	Light, Tail, 12vdc	2
29	1053838	(003063-)	Pin, 30mmd X 215mml	2
30	23146	(003063-)	Pin, Roll, .187d X 1.62l, .187/.192	2
31	1062566	(003063-)	Washer, Flat, 1.26B 1.88D .13, Stl, Pl	2
32	34411	(003063-)	Pin, Cotter, Hair, 1.00d .178 Wir	2
33	1052885	(003260-)	Switch, Press, Adj [4-16 In Wtr]	1

Fig. 41 - Hopper Door Group (000000-003061)

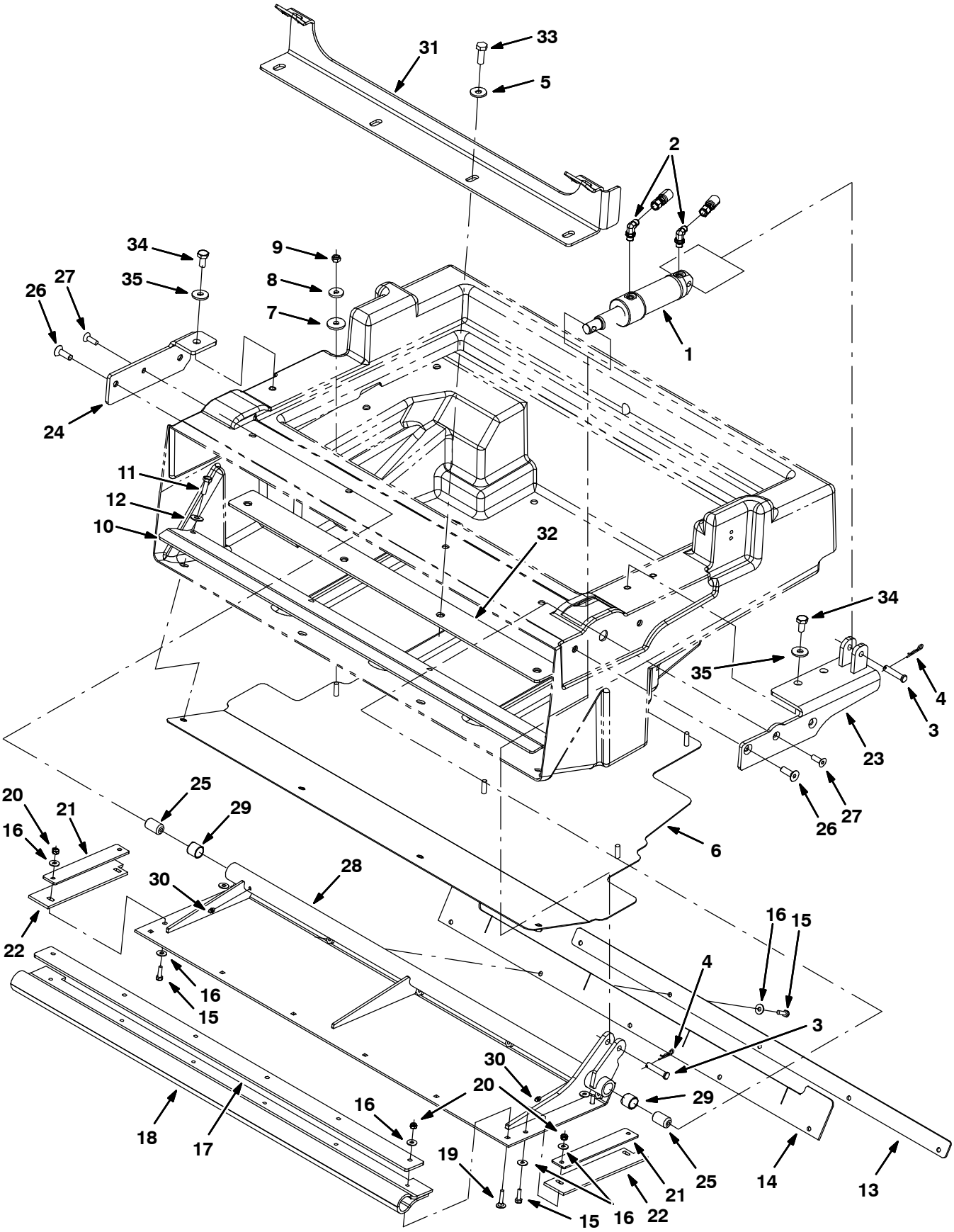

354434

Fig. 41 - Hopper Door Group (000000-003061)

Ref.	Part No.	Serial Number	Description	Qty.
1	1021941	(000000-003061)	Door Cyl, Hppr [Mako]	1
2	77097	(000000-003061)	Fitting, Hyd, E90, Jm04/Om04	2
3	17461	(000000-003061)	Pin, Clevis, 0.37d X 1.75l	2
4	08179	(000000-003061)	Pin, Cotter, .094 X 1.00	2
5	1014563	(000000-003061)	Washer, Flat, 0.40b 1.12d .12, Ss	4
6	1018237	(000000-003061)	Plate, Bottom, Hppr	1
7	222268	(000000-003061)	Washer, Flat, 0.38b 1.25d .12, Neo	2
8	1017218	(000000-003061)	Washer, Flat, 0.32b 1.00d .12, Ss	2
9	08713	(000000-003061)	Nut, Hex, Lock, M8 X 1.25, Nl, Ss	2
10	1018236	(000000-003061)	Bracket, Lip, Hppr	1
11	09010	(000000-003061)	Screw, Hex, M8 X 1.25 X 25, Ss	4
12	01685	(000000-003061)	Washer, Flat, 0.31, Ss	4
13	1018244	(000000-003061)	Strap, Door, Dump	1
14	1018245	(000000-003061)	Seal, Door, Dump	1
15	08716	(000000-003061)	Screw, Hex, M6 X 1.0 X 20, Ss	9
16	01684	(000000-003061)	Washer, Flat, 0.25, Ss	19
17	1018196	(000000-003061)	Plate, Retainer, Door, Dump	1
18	1018197	(000000-003061)	Seal, Door, Dump	1
19	379791	(000000-003061)	Bolt, Carriage, M06 X 1.0 X 30	6
20	08712	(000000-003061)	Nut, Hex, Lock, M6 X 1.0, Ss, Nl	10
21	1018194	(000000-003061)	Strap, Door, Dump, Side	2
22	1018199	(000000-003061)	Seal, Door, Dump, Side	2
23	1018210	(000000-003061)	Bracket Wldt, Pivot, Hppr Door, Lh	1
24	1018202	(000000-003061)	Bracket, Pivot, Hppr Door, Rh	1
25	1018193	(000000-003061)	Bushing, Pivot, Door	2
26	395825	(000000-003061)	Screw, Flt, M10 X 1.5 X 30, Ss 18-8	4
27	07810	(000000-003061)	Screw, Flt, M8 X 1.25 X 25, 10.9	2
28	1016463	(000000-003061)	Door Wldt, Hppr	1
29	64379	(000000-003061)	Bushing, Sleeve, 0.75b 0.88d 0.75l, Tef	2
30	07259	(000000-003061)	Fitting, Grease, Str Pm04 .47l	2
31	1044993	(000000-003061)	Bracket, Cover, Hopper	1
32	1018253	(000000-003061)	Bracket, Cover	1
33	12317	(000000-003061)	Screw, Hex, M10 X 1.5 X 30, Ss	4
34	09291	(000000-003061)	Screw, Hex, M10 X 1.5 X 20, Ss	3
35	1014563	(000000-003061)	Washer, Flat, 0.40b 1.12d .12, Ss	3

Fig. 42 - Hopper Door Group (003062-)

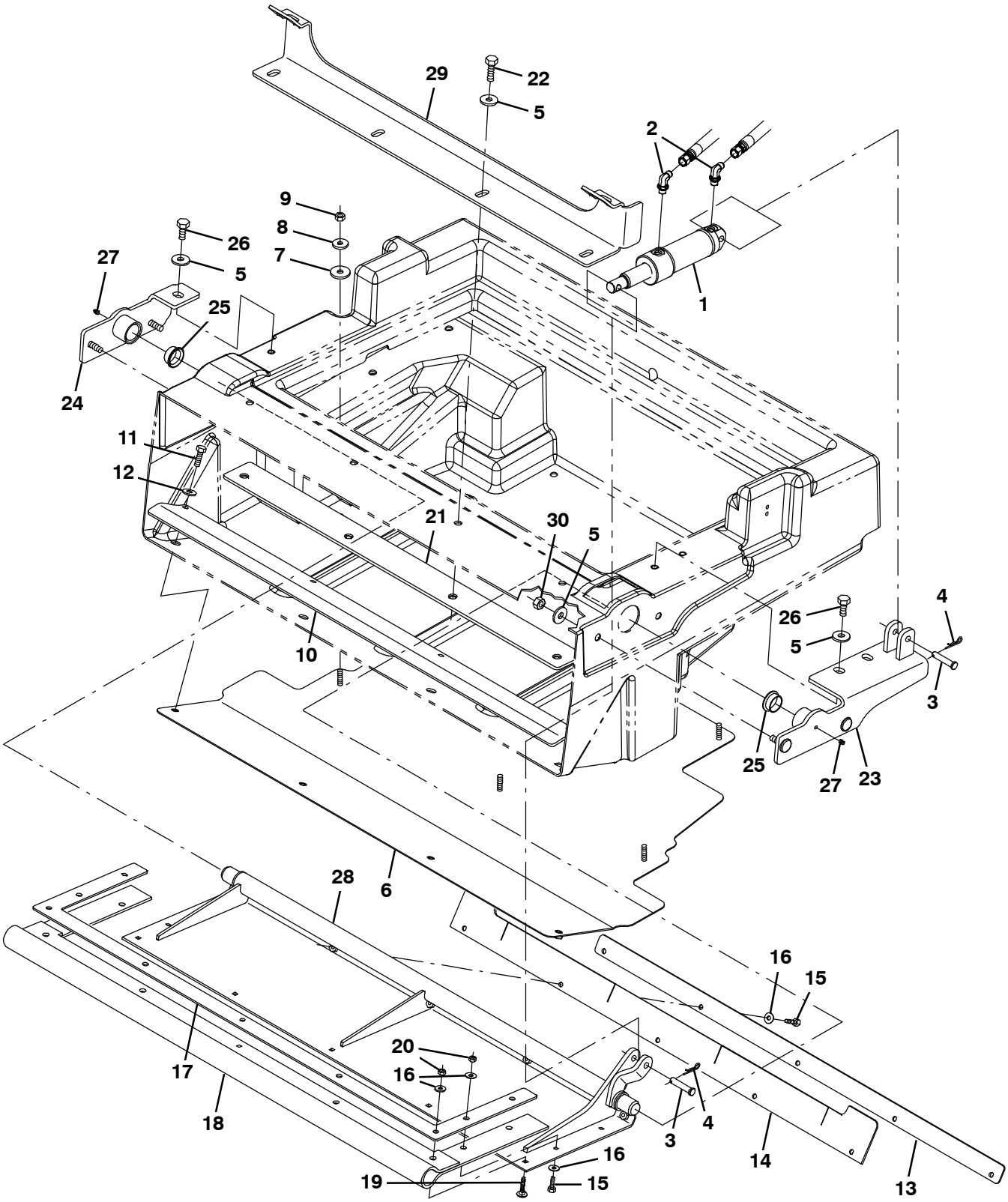

354434

Fig. 42 - Hopper Door Group (003062-)

Ref.	Part No.	Serial Number	Description	Qty.
1	1021941	(003062-)	Door Cyl, Hppr [Mako]	1
2	77097	(003062-)	Fitting, Hyd, E90, Jm04/Om04	2
3	17461	(003062-)	Pin, Clevis, 0.37d X 1.75l	2
4	08179	(003062-)	Pin, Cotter, .094 X 1.00	2
5	1014563	(003062-)	Washer, Flat, 0.40b 1.12d .12, Ss	11
6	1018237	(003062-)	Plate, Bottom, Hppr	1
7	222268	(003062-)	Washer, Flat, 0.38b 1.25d .12, Neo	2
8	1017218	(003062-)	Washer, Flat, 0.32b 1.00d .12, Ss	2
9	08713	(003062-)	Nut, Hex, Lock, M8 X 1.25, Nl, Ss	2
10	1018236	(003062-)	Bracket, Lip, Hppr	1
11	09010	(003062-)	Screw, Hex, M8 X 1.25 X 25, Ss	4
12	01685	(003062-)	Washer, Flat, 0.31, Ss	4
13	1039155	(003062-)	Strap, Door, Dump	1
14	1018245	(003062-)	Seal, Door, Dump	1
15	08716	(003062-)	Screw, Hex, M6 X 1.0 X 20, Ss	9
16	01684	(003062-)	Washer, Flat, 0.25, Ss	14
17	1039149	(003062-)	Plate, Retainer, Door, Dump	1
18	1039157	(003062-)	Seal, Door, Dump	1
19	379791	(003062-)	Bolt, Carriage, M06 X 1.0 X 30	5
20	08712	(003062-)	Nut, Hex, Lock, M6 X 1.0, Ss, Nl	9
21	1018253	(003062-)	Bracket, Cover	1
22	12317	(003062-)	Screw, Hex, M10 X 1.5 X 30, Ss	4
23	1038123	(003062-)	Bracket Wldt, Pivot, Hppr Door, Lh	1
24	1038134	(003062-)	Bracket Wldt, Pivot, Hppr, Rh	1
25	367313	(003062-)	Bushing, Flng, 1.00b 1.13d 0.50l	2
26	09291	(003062-)	Screw, Hex, M10 X 1.5 X 20, Ss	3
27	07259	(003062-)	Fitting, Grease, Str Pm04 .47l	2
28	1039124	(003062-)	Door Wldt, Hppr	1
29	1044993	(003062-)	Bracket, Cover, Hopper	1
30	08714	(003062-)	Nut, Hex, Lock, M10 X 1.5, Nl, Ss	4

Fig. 43 - Cylindrical Scrub Brush Drive Group, Left Side

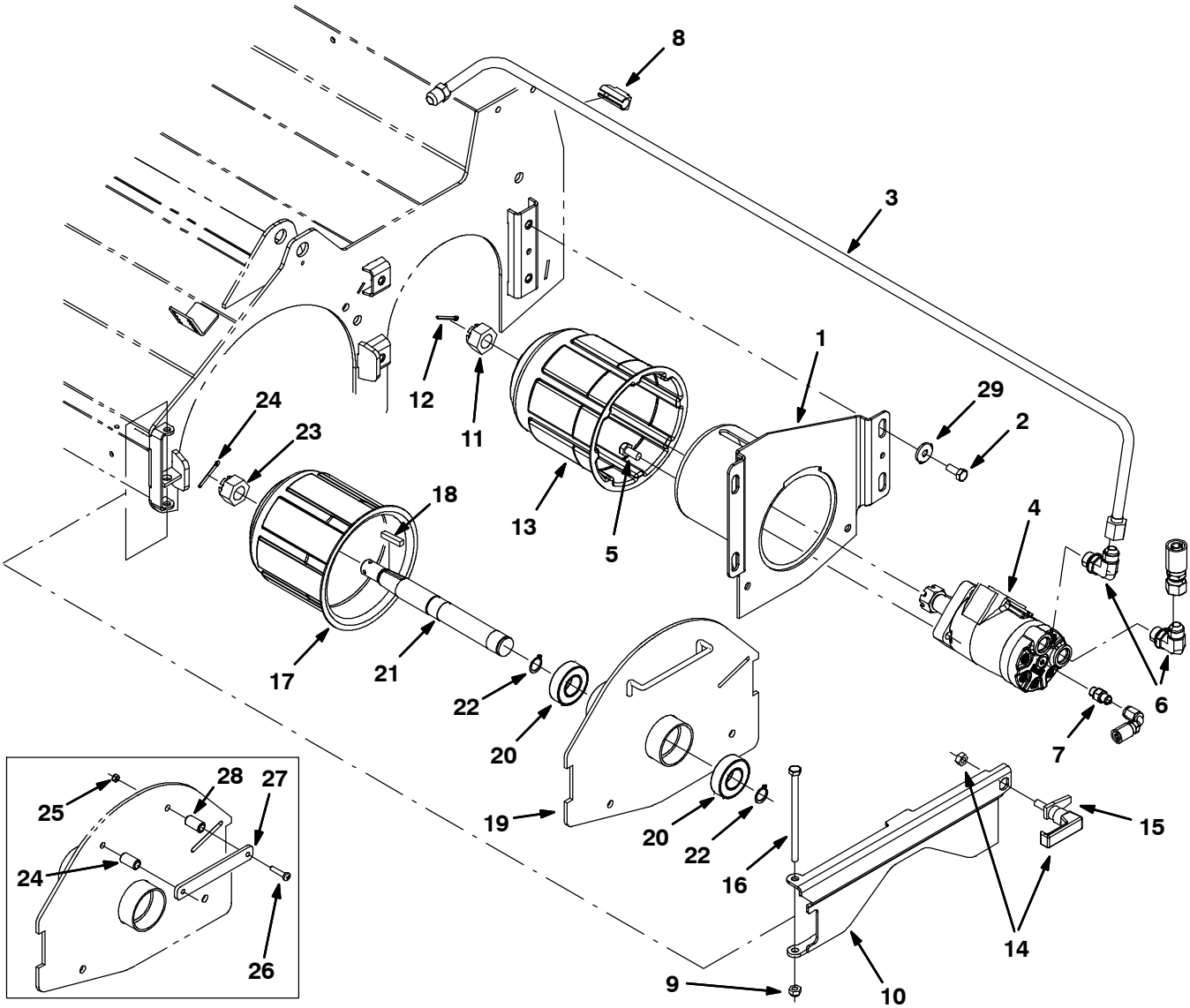

354435

Fig. 43 - Cylindrical Scrub Brush Drive Group, Left Side

	Ref.	Part No.	Serial Number	Description	Qty.
	1	1021019	(000000-)	Housing Wldt, Brush, Drive	1
	2	15675	(000000-)	Screw, Hex, M8 X 1.25 X 16, Ss	4
	3	1023617	(000000-)	Tube, Hyd, 08 Jf08/Jm08	1
	4	71729	(000000-)	Motor, Hyd, Gear, Int 04.5 Bi-Dir 1500 (See Breakdowns)	1
	5	01762	(000000-)	Screw, Hex, .38-16 X 0.75, Nl	4
	6	44868	(000000-)	Fitting, Hyd, E90, Jm08/Om08	2
	7	55586	(000000-)	Fitting, Hyd, Str, Jm04/Om04	1
	8	1026080	(000000-)	Clamp, Hyd, 0.50d	1
	9	08713	(000000-)	Nut, Hex, Lock, M8 X 1.25, Nl, Ss	11
	10	1029964	(000000-)	Door Wldt, Brush	1
	11	12295	(000000-)	Nut, Hex, Sltd, M20 X 2.5, 8	1
	12	08175	(000000-)	Pin, Cotter, .125 X 1.25	1
	13	87631	(000000-)	Plug Wldt, Drive, Brush, Sweep	1
	14	65695	(000000-)	Latch	1
	15	1026352	(000000-)	Pawl, Str	1
	16	70563	(000000-)	Screw, Hex, M8 X 1.25 X 130, 8.8	1
▽		9006398	(000000-)	Idler Assy, Brush, Replmt [M20/T20, M30]	1
▲	17	25686	(000000-)	Plug Wldt, Drive, Brush	1
▲	18	00927	(000000-)	Key, Sq, 0.25 X 0.25, 1.25l	1
▲	19	1038258	(000000-)	Door Wldt, Brush, Idler	1
▲	20	13534	(000000-)	Bearing, Ball, 0.98b 2.05d 0.59w	2
▲	21	56078	(000000-)	Shaft, Brush, Idler	1
▲	22	09005	(000000-)	Ring, Retaining, Ext, 1.00d, Basic	2
▲	23	12295	(000000-)	Nut, Hex, Sltd, M20 X 2.5, 8	1
▲	24	08175	(000000-)	Pin, Cotter, .125 X 1.25	1
	25	09739	(000000-002167)	Nut, Hex, Lock, M5 X 0.8, Nl, Ss	2
	26	17185	(000000-002167)	Screw, Pan, M5 X 0.8 X 40, Ss	2
	27	1032743	(000000-002167)	Plate, Handle	1
	28	222496	(000000-002167)	Sleeve, P/M, 0.31b 0.50d 0.9l [430ss]	2
	29	32491	(000000-)	Washer, Flat, 0.31, Std	4

Fig. 44 - Cylindrical Scrub Brush Drive Group, Right Side

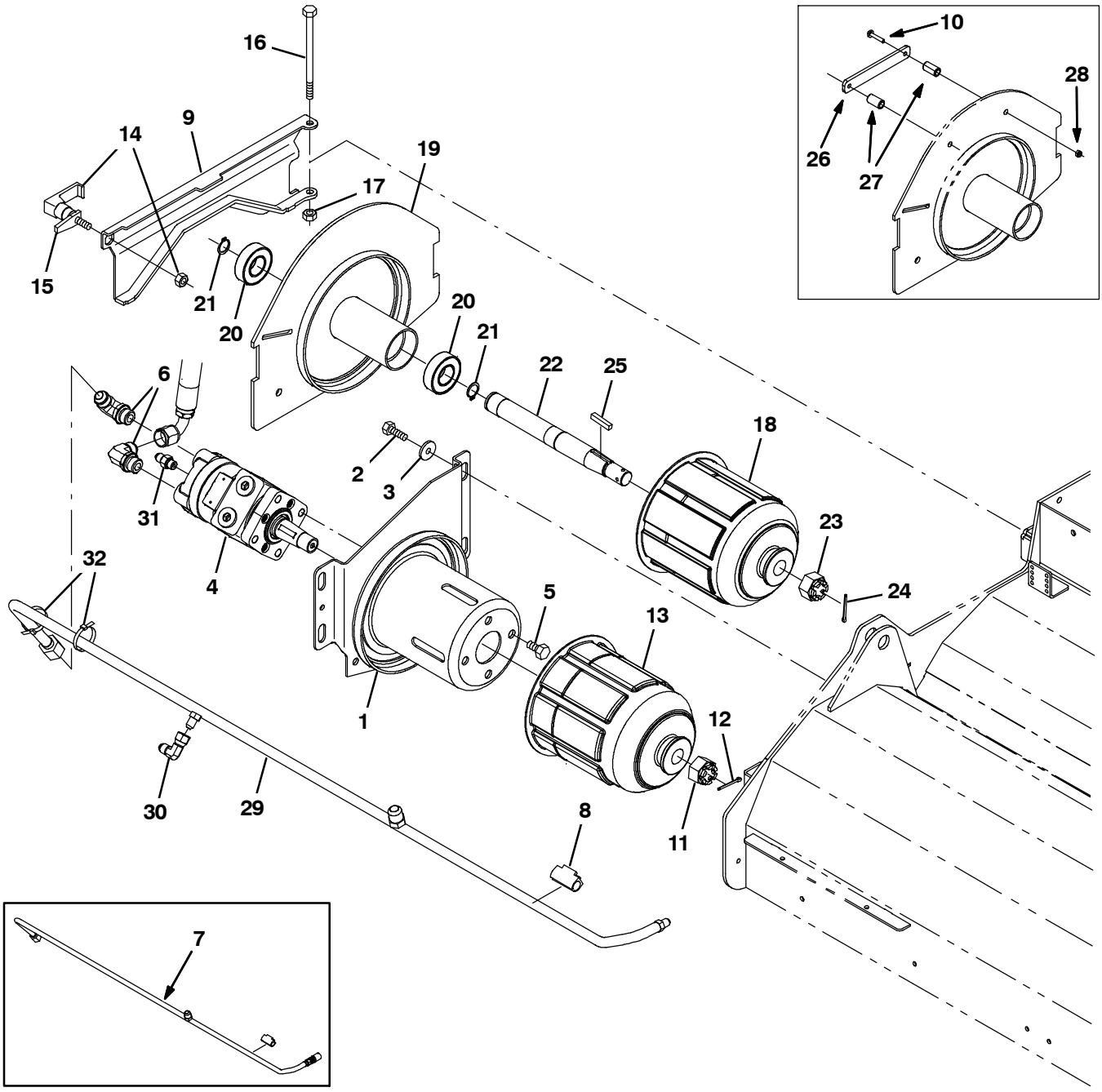

354436

Fig. 44 - Cylindrical Scrub Brush Drive Group, Right Side

	Ref.	Part No.	Serial Number	Description	Qty.
	1	1021019	(000000-)	Housing Wldt, Brush, Drive	1
	2	15675	(000000-)	Screw, Hex, M8 X 1.25 X 16, Ss	4
	3	32491	(000000-)	Washer, Flat, 0.31, Std	4
	4	71729	(000000-)	Motor, Hyd, Gear, Int 04.5 Bi-Dir 1500 (See Breakdowns)	1
	5	01762	(000000-)	Screw, Hex, .38-16 X 0.75, Nl	4
	6	44868	(000000-)	Fitting, Hyd, E90, Jm08/Om08	2
	7	9006386	(000000-003056)	Tube Kit, Hyd, Case Drain [M20/T20]	1
	8	1026080	(000000-)	Clamp, Hyd, 0.50d	1
	9	1029964	(000000-)	Door Wldt, Brush	1
	10	17185	(000000-002167)	Screw, Pan, M5 X 0.8 X 40, Ss	2
	11	12295	(000000-)	Nut, Hex, Sltd, M20 X 2.5, 8	1
	12	08175	(000000-)	Pin, Cotter, .125 X 1.25	1
	13	87631	(000000-)	Plug Wldt, Drive, Brush, Sweep	1
	14	65695	(000000-)	Latch	1
	15	1026352	(000000-)	Pawl, Str	1
	16	70563	(000000-)	Screw, Hex, M8 X 1.25 X 130, 8.8	1
	17	08713	(000000-)	Nut, Hex, Lock, M8 X 1.25, Nl, Ss	1
▽		9006398	(000000-)	Idler Assy, Brush, Replmt [M20/T20, M30]	1
▲	18	25686	(000000-)	Plug Wldt, Drive, Brush	1
▲	19	1038258	(000000-)	Door Wldt, Brush, Idler	1
▲	20	13534	(000000-)	Bearing, Ball, 0.98b 2.05d 0.59w	2
▲	21	09005	(000000-)	Ring, Retaining, Ext, 1.00d, Basic	2
▲	22	56078	(000000-)	Shaft, Brush, Idler	1
▲	23	12295	(000000-)	Nut, Hex, Sltd, M20 X 2.5, 8	1
▲	24	08175	(000000-)	Pin, Cotter, .125 X 1.25	1
▲	25	00927	(000000-)	Key, Sq, 0.25 X 0.25, 1.25l	1
	26	1032743	(000000-002167)	Plate, Handle	1
	27	222496	(000000-002167)	Sleeve, P/M, 0.31b 0.50d 0.9l [430ss]	2
	28	09739	(000000-002167)	Nut, Hex, Lock, M5 X 0.8, Nl, Ss	2
	29	1055139	(003057-	Tube, Hyd, Brush Return, W/ Cd [M20/T20]	1
	30	39210	(003057-	Fitting, Hyd, E90, Jf04/Jm04	1
	31	55586	(003057-	Fitting, Hyd, Str, Jm04/Om04	1
	32	49266	(003057-	Tie, Cable, Nyl, 07.3l .19w 1.8 Max D	2

Fig. 45 - Cylindrical Scrub Brush Head Lift Group

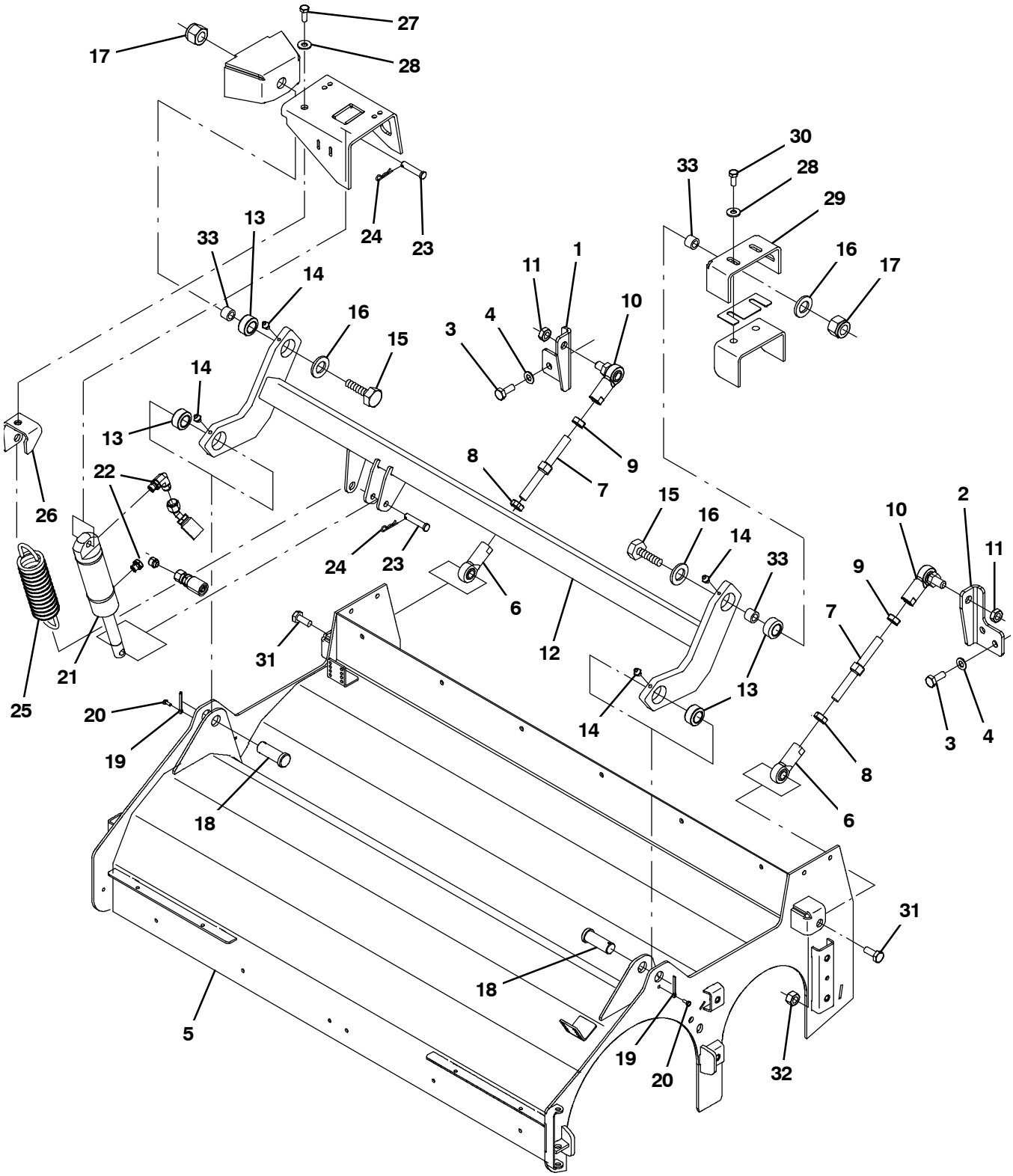

354437

Fig. 45 - Cylindrical Scrub Brush Head Lift Group

Ref.	Part No.	Serial Number	Description	Qty.
1	1030910	(000000-)	Bracket, Mtg, Scb Head, Rh	1
2	1030911	(000000-)	Bracket, Mtg, Scb Head, Lh	1
3	09028	(000000-)	Screw, Hex, M10 X 1.5 X 25, Ss	4
4	32485	(000000-)	Washer, Flat, 0.38 Sae	4
5	1020002	(000000-)	Housing Wldt, Swp, Scb	1
6	67555	(000000-)	Rod-End, .50-20rh Fem 0.50b	2
7	1014705	(000000-)	Rod, Thrd, 2 End, .50-20 04.9l, Rh / Lh	2
8	48985	(000000-)	Nut, Hex, Jam, .50-20	2
9	71369	(000000-)	Nut, Hex, Jam, .50-20, Lh	2
10	382099	(000000-)	Rod-End, .50-20lh Fem 0.50-20stud	2
11	51824	(000000-)	Nut, Hex, Lock, .50-20, Nl, Thin	2
12	1020003	(000000-)	Tube Wldt, Torque	1
13	42120	(000000-)	Bearing, Self Align, 0.75b 1.25d	4
14	07259	(000000-)	Fitting, Grease, Str Pm04 .47l	4
15	06969	(000000-)	Screw, Hex, M12 X 1.75 X 40, 8.8	2
16	41619	(000000-)	Washer, Flat, 0.56b 1.38d .11, Ss	2
17	09741	(000000-)	Nut, Hex, Lock, M12 X 1.75, Nl, Ss	2
18	04733-12	(000000-)	Pin, Clevis, 0.75d X 2.00l	2
19	08236	(000000-)	Pin, Cotter, .156 X 1.25	2
20	223198	(000000-)	Screw, Hex, M5 X 0.8 X 10, Fmg	2
21	1038137	(000000-)	Cylinder, Hyd, 1.5b 07.8l 02.80strk 2500	1
22	77098	(000000-)	Fitting, Hyd, E90, Jm06/Om04	2
23	17461	(000000-)	Pin, Clevis, 0.37d X 1.75l	2
24	86866	(000000-)	Pin, Cotter, Hair, 0.38d .072 Wir	2
25	1031413	(000000-)	Spring, Extn, 1.68od X .203wir, 7.5l	1
26	1027810	(000000-)	Bracket, Mtg, Spring	1
27	763090	(000000-)	Screw, Hex, M8 X 1.25 X 60, Fl	1
28	32491	(000000-)	Washer, Flat, 0.31, Std	4
29	1019146	(000000-)	Bracket, Mtg, Lift, Scb Head	1
30	09740	(000000-)	Screw, Hex, M8 X 1.25 X 20, Ss	3
31	39811	(000000-)	Screw, Hex, .50-13 X 1.50, 5	2
32	36644	(000000-)	Nut, Hex, Lock, .50-13, Nl, Thin	2
33	1025100	(000000-)	Sleeve, P/M, 0.47b 0.75d 0.5l [430ss]	3

Fig. 46 - Cylindrical Brush Head Skirt Group

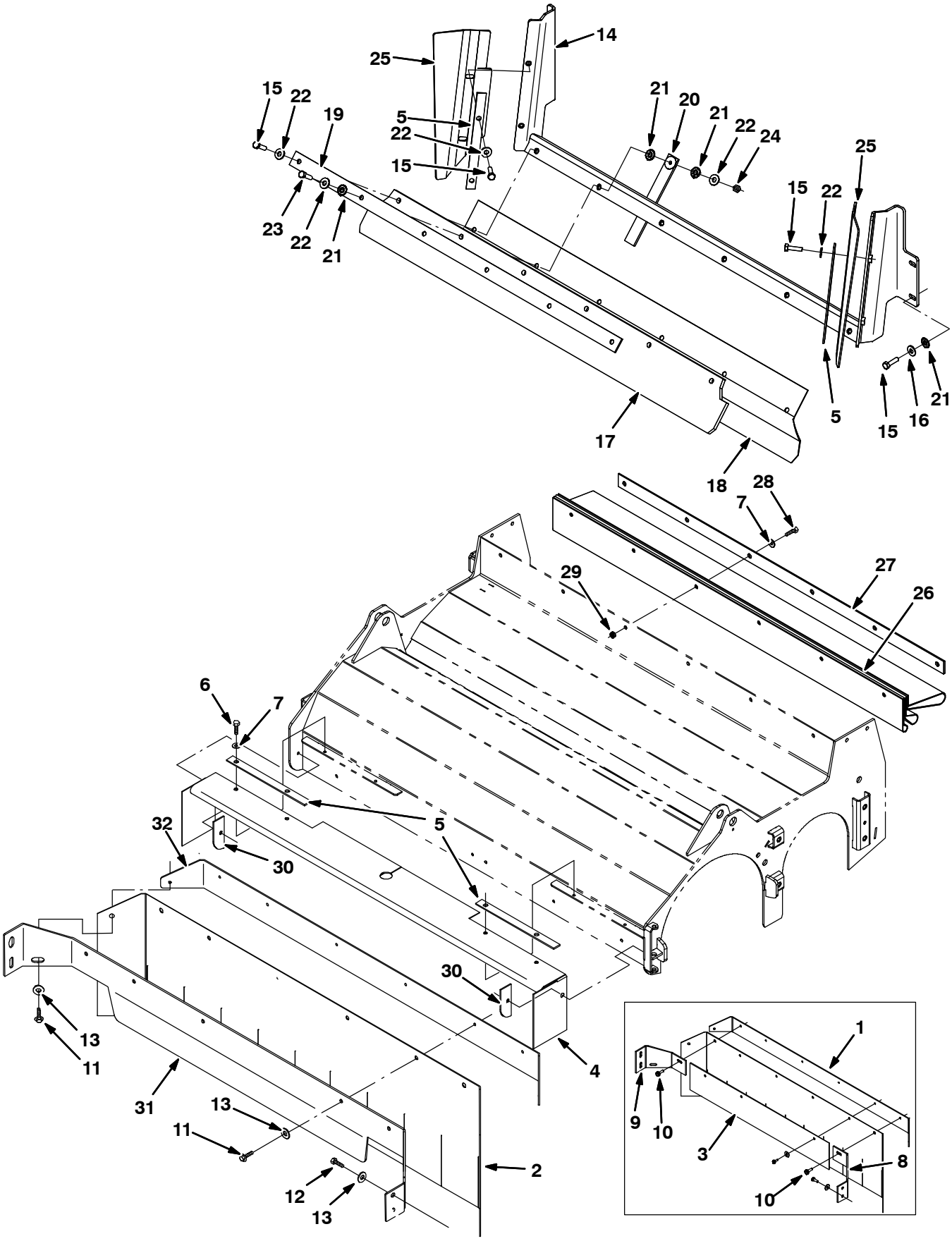

354438

Fig. 46 - Cylindrical Brush Head Skirt Group

Ref.	Part No.	Serial Number	Description	Qty.
1	1020208	(000000-002275)	Plate, Skirt, Front	1
2	1020166	(000000-)	Skirt, Neo, .06, 12.00w 45.88l, 07 Hole	1
3	1020207	(000000-002275)	Retainer, Skirt, Front	1
4	1022363	(000000-)	Skirt, Neo, .06, 07.63w 51.52l, 11 Hole	1
5	1022003	(000000-)	Retainer, Skirt	4
6	361339	(000000-)	Screw, Hex, M6 X 1.0 X 16, Fmg	6
7	01684	(000000-)	Washer, Flat, 0.25, Ss	12
8	1024570	(000000-002275)	Bracket, Mtg, Skirt	1
9	1020163	(000000-002275)	Bracket, Mtg, Skirt	1
10	76099	(000000-002275)	Screw, Hex, M8 X 1.25 X 25, Fmg	4
11	361339	(000000-)	Screw, Hex, M6 X 1.0 X 16, Fmg	7
12	09740	(000000-)	Screw, Hex, M8 X 1.25 X 20, Ss	4
13	01685	(000000-)	Washer, Flat, 0.31, Ss	11
14	1022179	(000000-)	Bracket Wldt, Flap, Recirculation	1
15	09010	(000000-)	Screw, Hex, M8 X 1.25 X 25, Ss	13
16	32491	(000000-)	Washer, Flat, 0.31, Std	4
17	1022007	(000000-)	Skirt, Rbr, .37, 04.50w 40.94l, 06 Hole	1
18	1022009	(000000-)	Skirt, Neo, .06, 06.38w 40.86l, 06 Hole	1
19	1020828	(000000-)	Strip, Flap, Recirculation	1
20	1028852	(000000-)	Strap, Static, Afmkt	1
21	41141	(000000-)	Washer, Lock, Int-Ext, 0.31	7
22	01685	(000000-)	Washer, Flat, 0.31, Ss	11
23	33401	(000000-)	Screw, Hex, M8 X 1.25 X 50, Ss, Fl	1
24	08713	(000000-)	Nut, Hex, Lock, M8 X 1.25, Nl, Ss	1
25	1022165	(000000-)	Skirt, Neo, .12, 05.39w 14.01l, 02 Sl	2
26	1026108	(000000-)	Skirt, Neo, .06, 26.99w 40.55l, 36 Hole	1
27	1020828	(000000-)	Strip, Flap, Recirculation	1
28	07805	(000000-)	Screw, Hex, M6 X 1.0 X 35, Ss	6
29	08712	(000000-)	Nut, Hex, Lock, M6 X 1.0, Ss, Nl	6
30	1022359	(000000-)	Plate, Mtg, Skirt, Scb Head	2
31	1039396	(002276-)	Bracket, Mtg, Skirt	1
32	1040018	(002276-)	Plate, Skirt, Front	1

Fig. 47 - Squeegee Lift Group, Rear

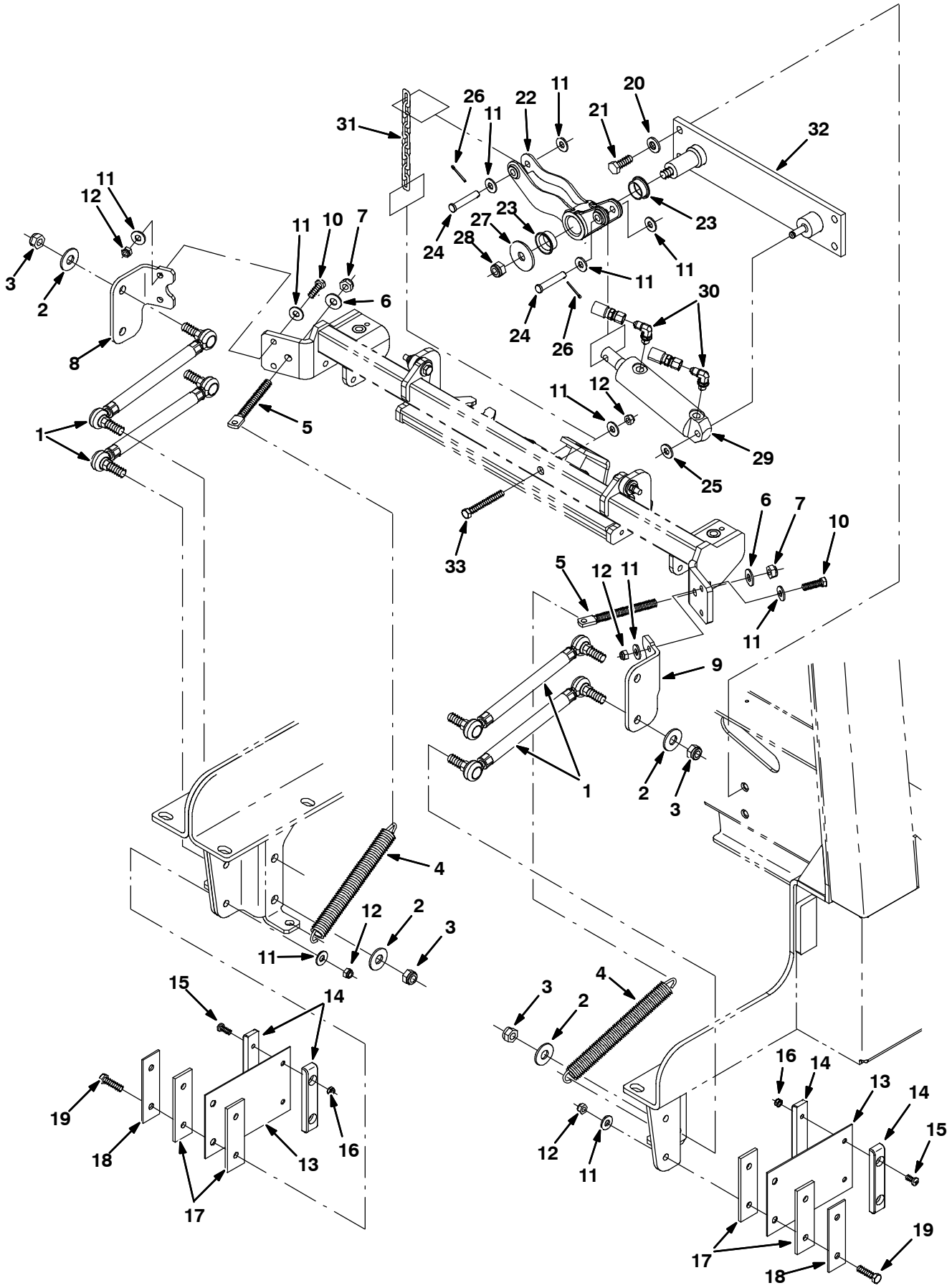

354439

Fig. 47 - Squeegee Lift Group, Rear

Ref.	Part No.	Serial Number	Description	Qty.
1	1026007	(000000-)	Link Assy, Rod-End, M12	4
2	41619	(000000-)	Washer, Flat, 0.56b 1.38d .11, Ss	8
3	09741	(000000-)	Nut, Hex, Lock, M12 X 1.75, Nl, Ss	8
4	46785-1	(000000-)	Spring, Extn, 0.88od X 0.14wir, 9.0l	2
5	1007220	(000000-)	Bolt, Eye, M10 X 1.5 X 117mm, 8.0 Eye	2
6	01686	(000000-)	Washer, Flat, 0.44b 1.00d .08, Ss	2
7	08714	(000000-)	Nut, Hex, Lock, M10 X 1.5, Nl, Ss	2
8	1022372	(000000-)	Angle, Rh	1
9	1022442	(000000-)	Angle, Lh	1
10	09010	(000000-)	Screw, Hex, M8 X 1.25 X 25, Ss	4
11	01685	(000000-)	Washer, Flat, 0.31, Ss	15
12	08713	(000000-)	Nut, Hex, Lock, M8 X 1.25, Nl, Ss	9
13	71204	(000000-)	Spring, Flt, 0.08th, 4.50w X 07.0l	2
14	1024648	(000000-)	Block, Centering	4
15	367770	(000000-)	Screw, Pan, M6 X 1.0 X 16, Ss	4
16	08712	(000000-)	Nut, Hex, Lock, M6 X 1.0, Ss, Nl	4
17	1024641	(000000-)	Spacer, Pad, Rbr	4
18	1024703	(000000-)	Retainer, Spring	2
19	09023	(000000-)	Screw, Hex, M8 X 1.25 X 35, Ss, Fl	4
20	41187	(000000-)	Washer, Flat, Belleville, .38	4
21	12317	(000000-)	Screw, Hex, M10 X 1.5 X 30, Ss	4
22	1025680	(000000-)	Bellcrank, Lift, Sqge	1
23	367313	(000000-)	Bushing, Flng, 1.00b 1.13d 0.50l	2
24	29584	(000000-)	Pin, Clevis, 0.37d X 2.00l	2
25	23524-1	(000000-)	Ring, Retaining, Ext, 0.38d, [Selflock]	1
26	08179	(000000-)	Pin, Cotter, .094 X 1.00	2
27	04414	(000000-)	Washer, Flat, 0.53b 1.88d .12, Stl, Pl	1
28	09741	(000000-)	Nut, Hex, Lock, M12 X 1.75, Nl, Ss	1
29	1038137	(000000-)	Cylinder, Hyd, 1.5b 07.8l 02.80strk 2500	1
30	77097	(000000-)	Fitting, Hyd, E90, Jm04/Om04	2
31	1023779	(000000-)	Chain, Str, 4/0, 08 Link	1
32	1021609	(000000-)	Plate Wldt, Lift, Sqge	1
33	06957	(002102-)	Screw, Hex, M8 X 1.25 X 60, 8.8	1

Fig. 48 - Squeegee Group, Rear

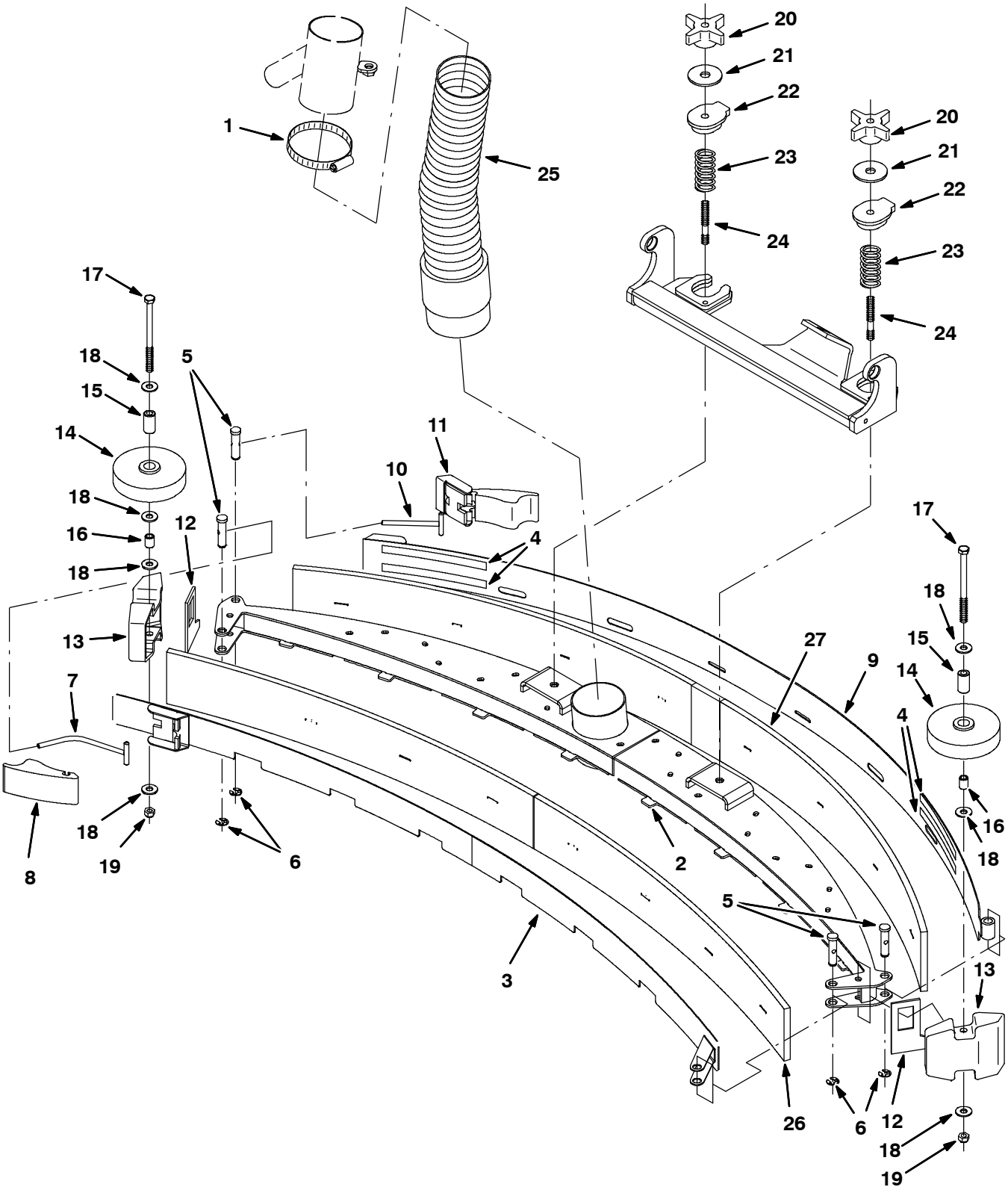

354440

Fig. 48 - Squeegee Group, Rear

	Ref.	Part No.	Serial Number	Description	Qty.
	1	43555	(000000-)	Clamp, Hose, Wormdrive, 2.50-3.50d, .50w	1
▽		9004493	(000000-)	Squeegee Kit, Rear, Replmt [M20/T20]	1
▲	2	1022831	(000000-)	Squeegee Wldt, Rear	1
▲	3	1023239	(000000-)	Clamp Wldt, Front	1
▲	4	03495	(000000-)	Strip, Non-Slip, 0.50w 06.0l	4
▲	5	21603	(000000-)	Pin, Grvd, 0.43d 01.8l [303ss]	4
▲	6	24555	(000000-)	Ring, Retaining, Ext, 0.38d, [E-Ring]	4
▲	7	386298	(000000-)	Pin Wldt, Front	1
▲	8	21601	(000000-)	Cam	1
▲	9	1028374	(000000-)	Clamp Wldt, Rear	1
▲	10	21606	(000000-)	Bar Wldt, Retainer, Sqge, Rear	1
▲	11	21602	(000000-)	Cam, Rear	1
▲	12	83874	(000000-)	Gasket, Sqge	2
▲	13	386264	(000000-)	Bumper, Sqge	2
▲	14	363162	(000000-)	Wheel, 4.0d 0.89w 0.64b	2
▲	15	363301	(000000-)	Sleeve, P/M, 0.34b 0.63d 1.2l, Bnz	2
▲	16	80395	(000000-)	Sleeve, P/M, 0.31b 0.50d 0.7l [430ss]	2
▲	17	364441	(000000-)	Screw, Hex, M8 X 1.25 X 110, Ss	2
▲	18	01685	(000000-)	Washer, Flat, 0.31, Ss	10
▲	19	08713	(000000-)	Nut, Hex, Lock, M8 X 1.25, Nl, Ss	2
	20	370100	(000000-)	Knob, Star, 2.80d 4ear 1.1l .31-18 Pyp	2
	21	04414	(000000-)	Washer, Flat, 0.53b 1.88d .12, Stl, Pl	2
	22	387433	(000000-)	Ring, Mtg, Sqge, .50l	2
	23	387500	(000000-)	Spring, Cmpr, 0.9od .042wir 02.0l	2
	24	387237	(000000-)	Stud, .31-18 2.75l M8 X 1.25, Ss	2
	25	1021511	(000000-)	Hose, Vacuum, 19.0l	1
	26	1017868	(000000-)	Blade, Sqge, Front, 49.58l Linatex	1
	26	1027719	(000000-)	Blade, Sqge, Front, 49.58l Ure (Option)	1
	27	1031331	(000000-)	Blade, Sqge, Rear, Linatex	1
	27	1031945	(000000-)	Blade, Sqge, Rear, 53.78l Ure (Option)	1

Fig. 49 - Squeegee Linkage Group, Rear

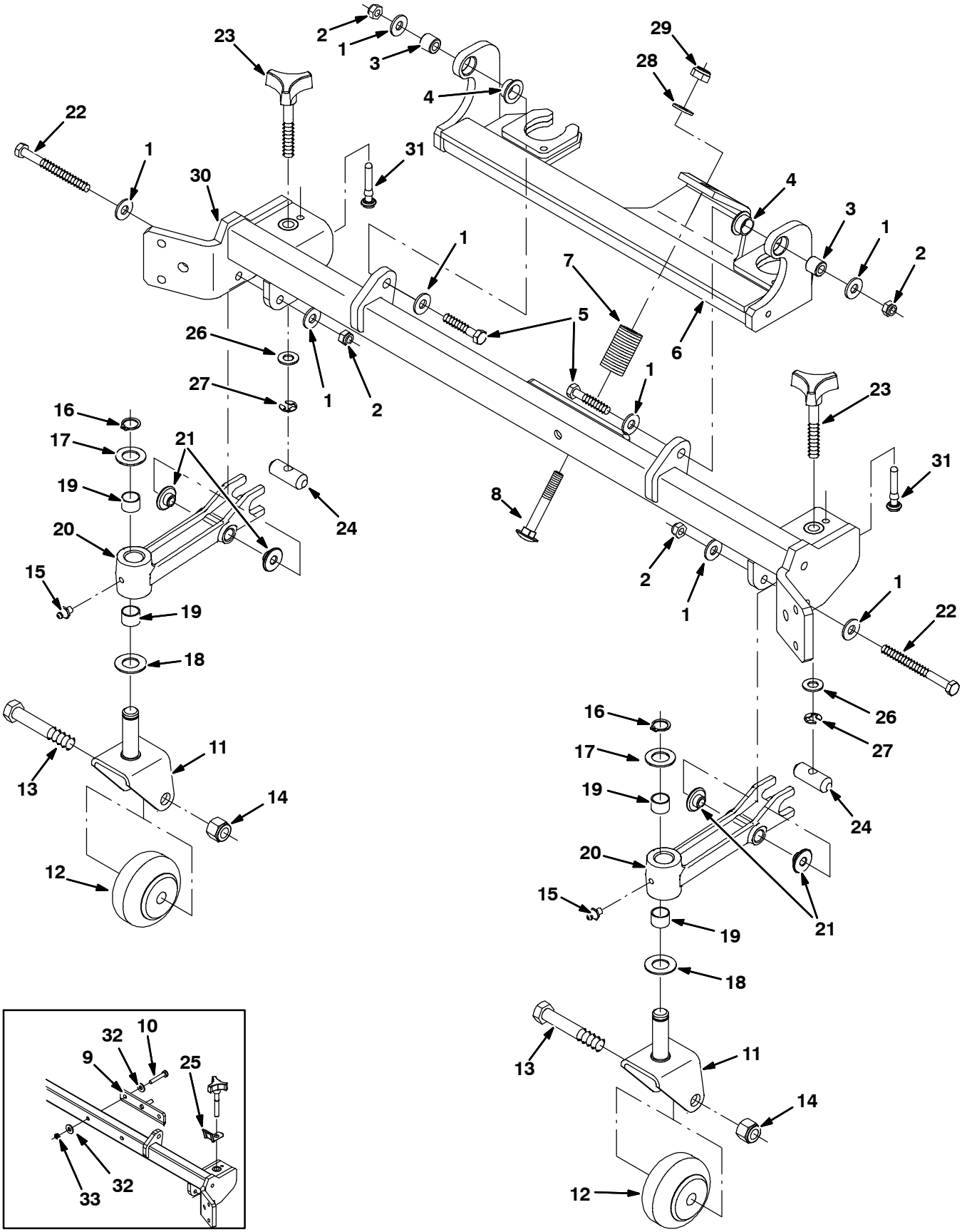

354441

Fig. 49 - Squeegee Linkage Group, Rear

Ref.	Part No.	Serial Number	Description	Qty.
1	01685	(000000-)	Washer, Flat, 0.31, Ss	6
2	08713	(000000-)	Nut, Hex, Lock, M8 X 1.25, Nl, Ss	4
3	80409	(000000-)	Sleeve, P/M, 0.34b 0.63d 0.6l, Bnz	2
4	25735	(000000-)	Bushing, Flng, 0.63b 0.75d 0.38l	2
5	222505	(000000-)	Screw, Hex, M8 X 1.25 X 45, Ss	2
6	1023476	(000000-)	Bracket Wldt, Mtg, Sqge	1
7	65180	(000000-)	Spring, Dsl, 1.00od 0.50id 1.7l	1
8	1025601	(000000-)	Bolt, Carriage, M10 X 1.5 X 70	1
9	1034147	(000000-002101)	Pin Wldt, Lift (Replaced by 9003478)	1
10	222505	(000000-002101)	Screw, Hex, M8 X 1.25 X 45, Ss	2
11	1021404	(000000-)	Bracket Wldt, Mtg, Caster	2
12	20833	(000000-)	Wheel, 3.0d 1.38w 0.50b	2
13	81952	(000000-)	Screw, Hex, .50-13 X 3.00, Ss18-8	2
14	02931	(000000-)	Nut, Hex, Lock, .50-13, Nl, Ss	2
15	07259	(000000-)	Fitting, Grease, Str Pm04 .47l	2
16	33373	(000000-)	Ring, Retaining, Ext, 0.62d, Hd	2
17	63468	(000000-)	Washer, Flat, 0.69b 1.19d .06, Stl, Pl	2
18	64425	(000000-)	Washer, Thrust, 0.61b 1.25d .06, Fgl	2
19	07449	(000000-)	Bushing, Sleeve, 0.62b 0.72d 0.50l, Fgl	4
20	1025460	(000000-)	Caster, Pivot	2
21	80950	(000000-)	Bushing, Flng, 0.32b 0.50d 0.24l, Bnz	4
22	39281	(000000-)	Screw, Hex, M8 X 1.25 X 90, 8.8	2
23	1021546	(000000-)	Knob Assy, Star, 1.12d 3ear M10	2
24	1021497	(000000-)	Pin, 0.63d 01.8l, 1/M10h, 2cham	2
25	1022545	(000000-002049)	Spring, Keeper	2
26	32485	(000000-)	Washer, Flat, 0.38 Sae	2
27	24555	(000000-)	Ring, Retaining, Ext, 0.38d, [E-Ring]	2
28	1014563	(000000-)	Washer, Flat, 0.40b 1.12d .12, Ss	1
29	08714	(000000-)	Nut, Hex, Lock, M10 X 1.5, Nl, Ss	1
30	1034149	(000000-)	Crossmember Wldt [M20]	1
31	1035727	(002050-)	Stop, Rotation	2
32	01685	(000000-002101)	Washer, Flat, 0.31, Ss	4
33	08713	(000000-002101)	Nut, Hex, Lock, M8 X 1.25, Nl, Ss	2

Fig. 50 - Squeegee Group, Right Side

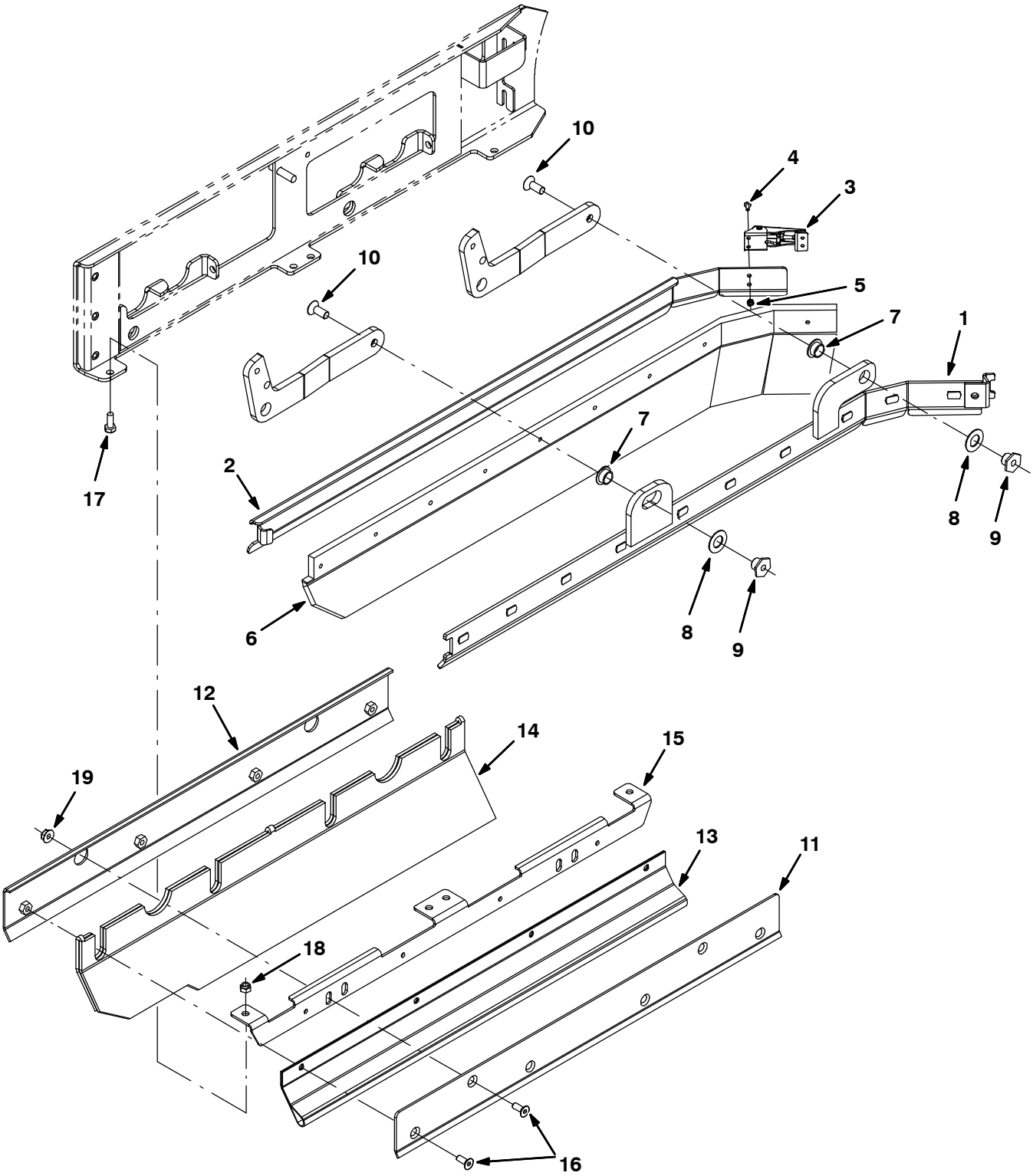

354442

Fig. 50 - Squeegee Group, Right Side

Ref.	Part No.	Serial Number	Description	Qty.
1	1029132	(000000-)	Frame Wldt, Sqge, Rh	1
2	1029128	(000000-)	Retainer, Sqge, Side, Rh	1
3	384418	(000000-)	Latch, Door [Southco 91-562-07]	1
4	49697	(000000-)	Screw, Pan, M4 X 0.7 X 10, Ss	2
5	33932	(000000-)	Nut, Hex, Lock, M4 X 0.7, Nl, Ss	2
6	1031011	(000000-)	Blade, Sqge, .38 3.55w 038.3l, Linatex	1
6	1031823	(000000-)	Blade, Sqge, .38 3.55w 038.3l, Ure (Option)	1
7	25735	(000000-)	Bushing, Flng, 0.63b 0.75d 0.38l	2
8	64425	(000000-)	Washer, Thrust, 0.61b 1.25d .06, Fgl	2
9	1022846	(000000-)	Nut, T, M10 X 1.50 X 15.8od X 13.0l	2
10	09081	(000000-)	Screw, Flt, M10 X 1.5 X 25, 10.9	2
11	1024584	(000000-)	Bracket, Mtg, Skirt, Brush Door	1
12	1024651	(000000-)	Bracket, Mtg, Skirt, Door	1
13	1024586	(000000-)	Skirt, Neo, .06, 06.85w 27.95l, 08 Hole	1
14	1019295	(000000-)	Skirt, Neo, .18, 10.37w 27.95l, 12 H&S	1
15	1025151	(000000-)	Bracket, Mtg, Skirt, Door, Brush	1
16	222463	(000000-)	Screw, Flt, M8 X 1.25 X 20, Blk	6
17	393135	(000000-)	Screw, Btn, M8 X 1.25 X 20, Blk	4
18	08713	(000000-)	Nut, Hex, Lock, M8 X 1.25, Nl, Ss	4
19	07791	(000000-)	Nut, Hex, Flng, M8 X 1.25	2

Fig. 51 - Squeegee Lift Group, Right Side

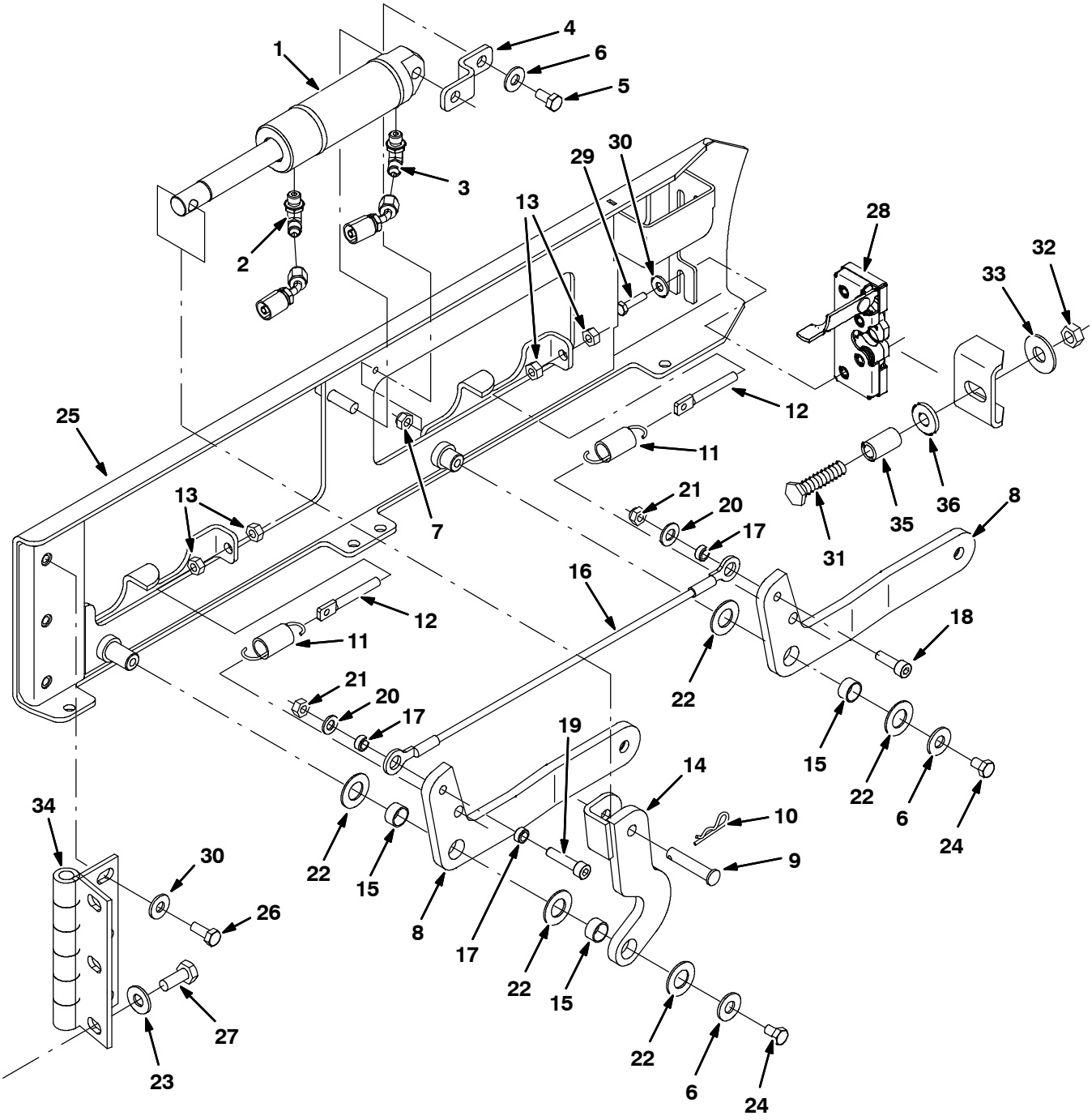

354443

Fig. 51 - Squeegee Lift Group, Right Side

Ref.	Part No.	Serial Number	Description	Qty.
1	1038137	(000000–)	Cylinder, Hyd, 1.5b 07.8l 02.80strk 2500	1
2	77097	(000000–)	Fitting, Hyd, E90, Jm04/Om04	1
3	1028635	(000000–)	Fitting, Hyd, Rst, Spcl	1
4	1022825	(000000–)	Bracket, Mtg, Cyl	1
5	08716	(000000–)	Screw, Hex, M6 X 1.00 X 20, Ss	1
6	01685	(000000–)	Washer, Flat, 0.31, Ss	3
7	08713	(000000–)	Nut, Hex, Lock, M8 X 1.25, Nl, Ss	1
8	1020548	(000000–)	Arm, Sqge, Side, Rh	2
9	17461	(000000–)	Pin, Clevis, 0.37D X 1.75L	1
10	08182	(000000–)	Pin, Cotter, .125 X 1.00	1
11	87816	(000000–)	Spring, Extn, 0.75od X 0.09wir, 2.5l	2
12	386088	(000000–)	Bolt, Eye, M08 X 1.25 X 070mm, 05.50 Eye	2
13	07786	(000000–)	Nut, Hex, Std, M8 X 1.25, Ss	4
14	1023306	(000000–)	Arm Wldt, Sqge, Lift, Rh	1
15	71607	(000000–)	Bushing, Sleeve, 0.63b 0.72d 0.38l	3
16	81784	(000000–)	Cable, Glv .13d 015.8l .50eye /.50eye	1
17	360801	(000000–)	Sleeve, 0.31b 0.50d 0.3l, Ss	3
18	39308	(000000–)	Screw, Soc, M8 X 1.25 X 25, 12.9	1
19	41445	(000000–)	Screw, Soc, M8 X 1.25 X 35, 12.9	1
20	39349	(000000–)	Washer, Flat, 0.31 Sae	2
21	08709	(000000–)	Nut, Hex, Lock, M8 X 1.25, Nl	2
22	64425	(000000–)	Washer, Thrust, 0.61b 1.25d .06, Fgl	5
23	41187	(000000–)	Washer, Flat, Belleville, .38	3
24	09740	(000000–)	Screw, Hex, M8 X 1.25 X 20, Ss	2
25	1019031	(000000–)	Door Wldt, Brush, Rh	1
26	09028	(000000–)	Screw, Hex, M10 X 1.5 X 25, Ss	3
27	09740	(000000–)	Screw, Hex, M8 X 1.25 X 20, Ss	3
28	59194	(000000–)	Latch, Hook	1
29	09007	(000000–)	Screw, Hex, M6 X 1.0 X 25, Ss	2
30	41185	(000000–)	Washer, Flat, Belleville, .25	5
31	379870	(000000–)	Screw, Hex, M12 X 1.75 X 55, Ss	1
32	07788	(000000–)	Nut, Hex, Std, M12 X 1.75, Ss	1
33	41619	(000000–)	Washer, Flat, 0.56b 1.38d .11, Ss	1
34	1024576	(000000–)	Hinge, .50pin .19 4.0w 06.0l 3/0.44sl	1
35	36328	(000000–)	Washer, Flat, Belleville, .50	1
36	1039348	(000000–)	Sleeve, 0.49b 0.68d 1.2l [304ss]	1

Fig. 52 - Squeegee Group, Left Side

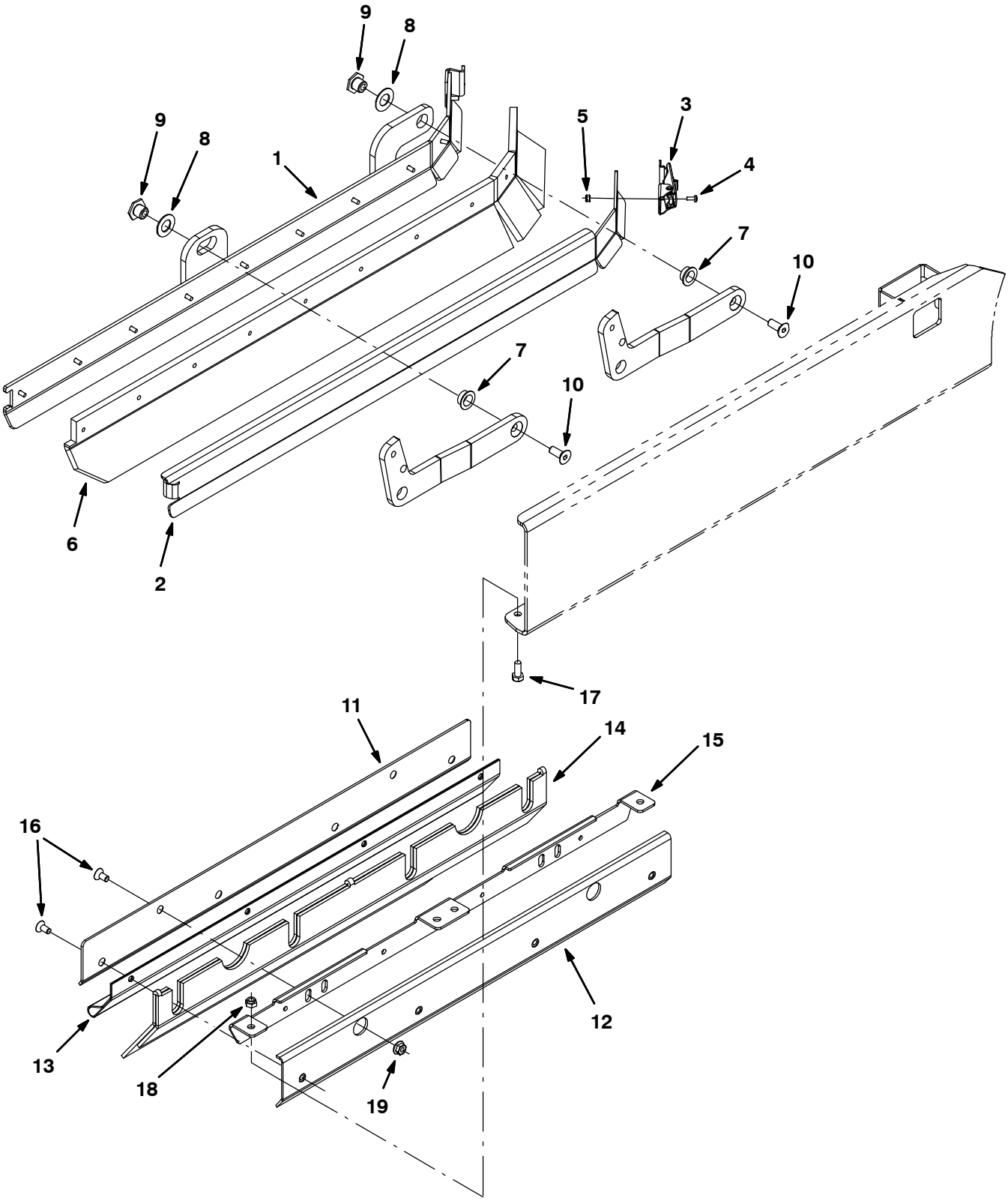

354444

Fig. 52 - Squeegee Group, Left Side

Ref.	Part No.	Serial Number	Description	Qty.
1	1028972	(000000-)	Frame Wldt, Sqge, Lh	1
2	1028979	(000000-)	Retainer, Sqge, Side, Lh	1
3	384418	(000000-)	Latch, Door [Southco 91-562-07]	1
4	49697	(000000-)	Screw, Pan, M4 X 0.7 X 10, Ss	2
5	33932	(000000-)	Nut, Hex, Lock, M4 X 0.7, Nl, Ss	2
6	1031011	(000000-)	Blade, Sqge, .38 3.55w 038.3l, Linatex	1
6	1031823	(000000-)	Blade, Sqge, .38 3.55w 038.3l, Ure (Option)	1
7	25735	(000000-)	Bushing, Flng, 0.63b 0.75d 0.38l	2
8	64425	(000000-)	Washer, Thrust, 0.61b 1.25d .06, Fgl	2
9	1022846	(000000-)	Nut, T, M10 X 1.50 X 15.8od X 13.0l	1
10	09081	(000000-)	Screw, Flt, M10 X 1.5 X 25, 10.9	2
11	1024584	(000000-)	Bracket, Mtg, Skirt, Brush Door	1
12	1024651	(000000-)	Bracket, Mtg, Skirt, Door	1
13	1024586	(000000-)	Skirt, Neo, .06, 06.85w 27.95l, 08 Hole	1
14	1019295	(000000-)	Skirt, Neo, .18, 10.37w 27.95l, 12 H&S	1
15	1025151	(000000-)	Bracket, Mtg, Skirt, Door, Brush	1
16	222463	(000000-)	Screw, Flt, M8 X 1.25 X 20, Blk	6
17	393135	(000000-)	Screw, Btn, M8 X 1.25 X 20, Blk	4
18	08713	(000000-)	Nut, Hex, Lock, M8 X 1.25, Nl, Ss	4
19	07791	(000000-)	Nut, Hex, Flng, M8 X 1.25	2

Fig. 53 - Squeegee Lift Group, Left Side

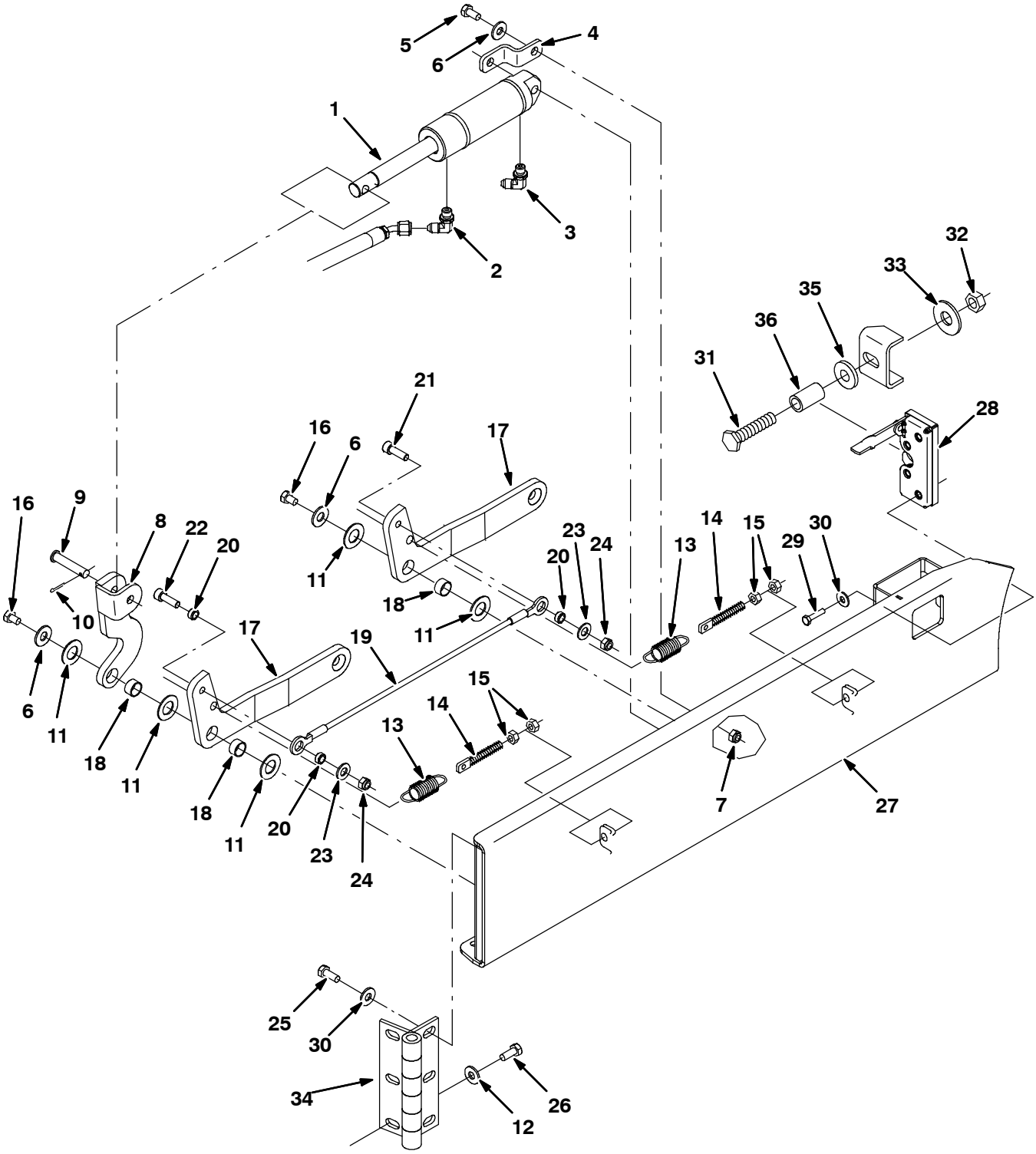

354445

Fig. 53 - Squeegee Lift Group, Left Side

Ref.	Part No.	Serial Number	Description	Qty.
1	1038137	(000000–)	Cylinder, Hyd, 1.5b 07.8l 02.80strk 2500	1
2	77097	(000000–)	Fitting, Hyd, E90, Jm04/Om04	1
3	1028635	(000000–)	Fitting, Hyd, Rst, Spcl	1
4	1022825	(000000–)	Bracket, Mtg, Cyl	1
5	08716	(000000–)	Screw, Hex, M6 X 1.00 X 20, Ss	1
6	01685	(000000–)	Washer, Flat, 0.31, Ss	3
7	08713	(000000–)	Nut, Hex, Lock, M8 X 1.25, Nl, Ss	1
8	1022978	(000000–)	Arm Wldt, Lift, Sqge, Lh	1
9	17461	(000000–)	Pin, Clevis, 0.37D X 1.75L	1
10	08182	(000000–)	Pin, Cotter, .125 X 1.00	1
11	64425	(000000–)	Washer, Thrust, 0.61b 1.25d .06, Fgl	5
12	41187	(000000–)	Washer, Flat, Belleville, .38	3
13	87816	(000000–)	Spring, Extn, 0.75od X 0.09wir, 2.5l	2
14	386088	(000000–)	Bolt, Eye, M08 X 1.25 X 070mm, 05.50 Eye	2
15	07786	(000000–)	Nut, Hex, Std, M8 X 1.25, Ss	4
16	09740	(000000–)	Screw, Hex, M8 X 1.25 X 20, Ss	2
17	1023307	(000000–)	Arm, Sqge, Side, Lh	2
18	71607	(000000–)	Bushing, Sleeve, 0.63b 0.72d 0.38l	3
19	81784	(000000–)	Cable, Glv .13d 015.8l .50eye /.50eye	1
20	360801	(000000–)	Sleeve, 0.31b 0.50d 0.3l, Ss	3
21	39308	(000000–)	Screw, Soc, M8 X 1.25 X 25, 12.9	1
22	41445	(000000–)	Screw, Soc, M8 X 1.25 X 35, 12.9	1
23	39349	(000000–)	Washer, Flat, 0.31 Sae	2
24	08709	(000000–)	Nut, Hex, Lock, M8 X 1.25, Nl	2
25	09028	(000000–)	Screw, Hex, M10 X 1.5 X 25, Ss	3
26	09740	(000000–)	Screw, Hex, M8 X 1.25 X 20, Ss	6
27	1023314	(000000–)	Door Wldt, Brush, Lh	1
28	59195	(000000–)	Latch, Hook	1
29	09007	(000000–)	Screw, Hex, M6 X 1.0 X 25, Ss	2
30	41185	(000000–)	Washer, Flat, Belleville, .25	5
31	379870	(000000–)	Screw, Hex, M12 X 1.75 X 55, Ss	1
32	07788	(000000–)	Nut, Hex, Std, M12 X 1.75, Ss	1
33	41619	(000000–)	Washer, Flat, 0.56b 1.38d .11, Ss	1
34	1024576	(000000–)	Hinge, .50pin .19 4.0w 06.0l 3/0.44sl	1
35	36328	(000000–)	Washer, Flat, Belleville, .50	1
36	1039348	(000000–)	Sleeve, 0.49b 0.68d 1.2l [304ss]	1

Home Find... Go To..

Fig. 54 - Solution Tank Group

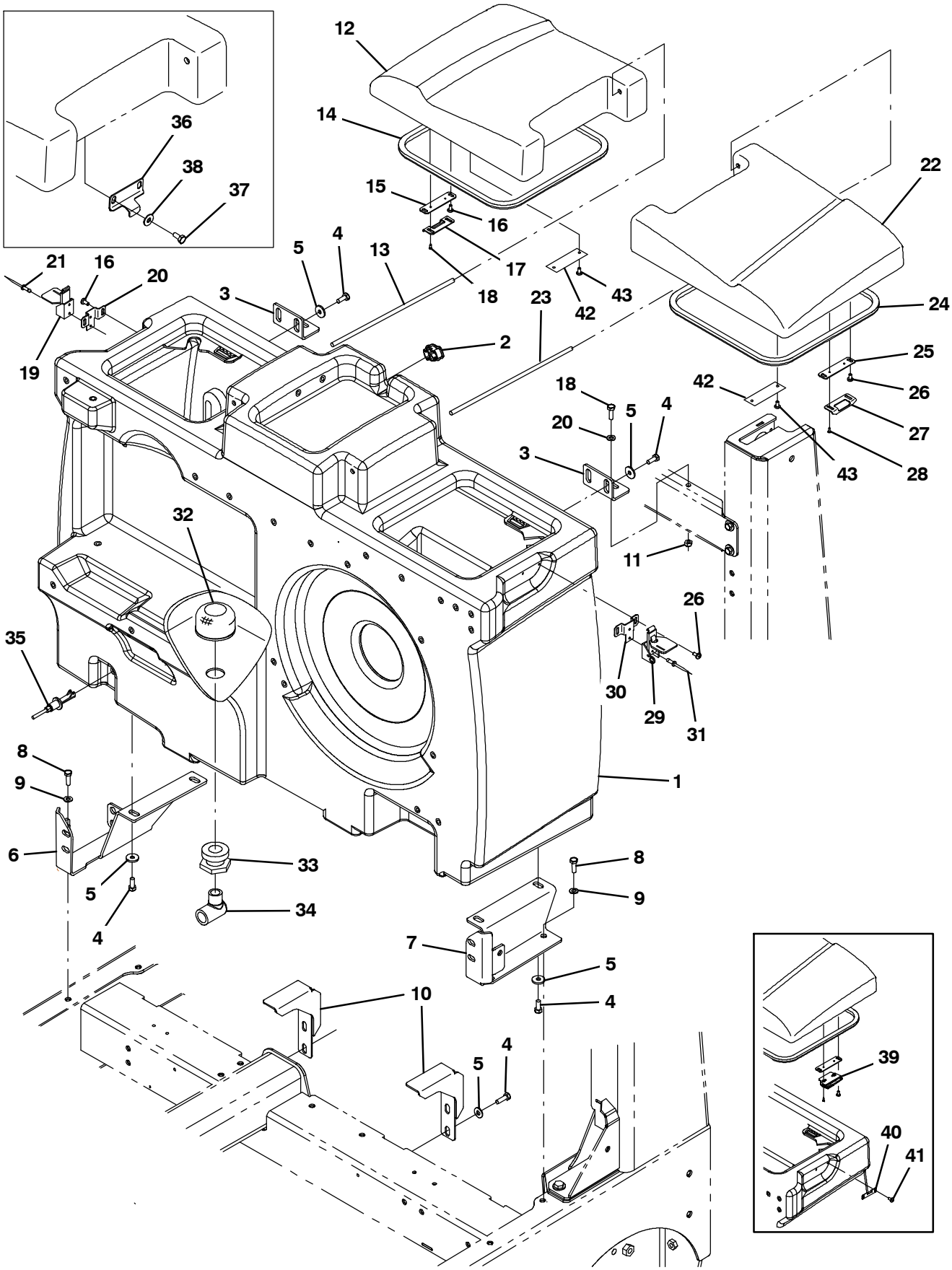

354446, M20

Fig. 54 - Solution Tank Group

	Ref.	Part No.	Serial Number	Description	Qty.
	1	1027381	(002413-)	Tank, Soltn, W/ Label [M20]	1
	1	9004117	(000000-002412)	Tank Kit, Soltn, W/ Bracket, Replmt	1
	2	390994	(000000-)	Plug, Hole, Soltn Tank, Blk Pyu	1
	3	1020209	(000000-)	Angle, Sppt, Tank, Rear	2
	4	09740	(000000-)	Screw, Hex, M8 X 1.25 X 20, Ss	12
	5	1017218	(000000-)	Washer, Flat, 0.32b 1.00d .12, Ss	12
	6	1040306	(000000-)	Bracket Wldt, Tank, Soltn, Rh	1
	7	1024591	(000000-)	Bracket, Tank, Soltn, Lh	1
	8	09010	(000000-)	Screw, Hex, M8 X 1.25 X 25, Ss	4
	9	39349	(000000-)	Washer, Flat, 0.31 Sae	4
	10	1024389	(000000-)	Bracket, Soltn, Tank, Cntr	2
	11	08713	(000000-)	Nut, Hex, Lock, M8 X 1.25, Nl, Ss	2
▽		9003069	(000000-)	Cover Kit, Soltn Tank, Rh [M20 & T20]	1
▲	12	1022176	(000000-)	Cover, Tank, Soltn, Rh, Trimmed	1
▲	13	1047098	(000000-)	Bar, Rnd, Plstc, 0.31d 12.5l	1
▲	14	1038805	(000000-)	Seal, Bulb, Str, .50Hi .50W 047.2L, Adh	1
▲	15	1039757	(002426-)	Plate, Mtg, Latch	1
▲	16	382320	(000000-)	Screw, Pan, Phl, 12-16 X 0.50, F/ Plstc	4
▲	17	1048474	(002798-)	Catch, Latch, Tank Cover	1
▲	18	1045964	(002798-)	Screw, Hex, M4 X 0.70 X 10, Fmg, Blk	2
▲	19	367949	(002798-)	Latch	1
▲	20	1048512	(002798-)	Bracket, Mtg, Latch, Tank Cover	1
▲	21	08875	(002798-)	Rivet, Blind, .125d X 0.54 X .25d, Alm	2
▽		9003071	(000000-)	Cover Kit, Tank, Soltn, Rh, Replmt, Ce (Japan and CE Only)	1
▲	12	1031233	(000000-)	Cover, Tank, Soltn, Rh, Trimmed, Ce (Japan and CE Only)	1
▲	13	1047098	(000000-)	Bar, Rnd, Plstc, 0.31d 12.5l	1
▲	14	1038805	(000000-)	Seal, Bulb, Str, .50Hi .50W 047.2L, Adh	1
▲	15	1039757	(002426-)	Plate, Mtg, Latch	1
▲	16	382320	(000000-)	Screw, Pan, Phl, 12-16 X 0.50, F/ Plstc	4
▲	17	1048474	(002798-)	Catch, Latch, Tank Cover	1
▲	18	1045964	(002798-)	Screw, Hex, M4 X 0.70 X 10, Fmg, Blk	2
▲	19	367949	(002798-)	Latch	1
▲	20	1048512	(002798-)	Bracket, Mtg, Latch, Tank Cover	1
▲	21	08875	(002798-)	Rivet, Blind, .125d X 0.54 X .25d, Alm	2

(CONTINUED)

Fig. 54 - Solution Tank Group

	Ref.	Part No.	Serial Number	Description	Qty.
▽		9003068	(000000-)	Cover Kit, Tank, Soltn, Lh, Replmt	1
▲	22	1022182	(000000-)	Cover, Tank, Soltn, Lh, Trimmed	1
▲	23	1047098	(000000-)	Bar, Rnd, Plstc, 0.31d 12.5l	1
▲	24	1038805	(000000-)	Seal, Bulb, Str, .50Hi .50W 047.2L, Adh	1
▲	25	1039757	(002426-)	Plate, Mtg, Latch	1
▲	26	382320	(000000-)	Screw, Pan, Phl, 12-16 X 0.50, F/ Plstc	4
▲	27	1048474	(002798-)	Catch, Latch, Tank Cover	1
▲	28	1045964	(002798-)	Screw, Hex, M4 X 0.70 X 10, Fmg, Blk	2
▲	29	367949	(002798-)	Latch	1
▲	30	1048512	(002798-)	Bracket, Mtg, Latch, Tank Cover	1
▲	31	08875	(002798-)	Rivet, Blind, .125d X 0.54 X .25d, Alm	2
▽		9003070	(000000-)	Cover Kit, Tank, Soltn, Lh, Replmt, Ce (Japan and CE Only)	1
▲	22	1031235	(000000-)	Cover, Tank, Soltn, Lh, Trimmed, Ce (Japan and CE Only)	1
▲	23	1047098	(000000-)	Bar, Rnd, Plstc, 0.31d 12.5l	1
▲	24	1038805	(000000-)	Seal, Bulb, Str, .50Hi .50W 047.2L, Adh	1
▲	25	1039757	(002426-)	Plate, Mtg, Latch	1
▲	26	382320	(000000-)	Screw, Pan, Phl, 12-16 X 0.50, F/ Plstc	4
▲	27	1048474	(002798-)	Catch, Latch, Tank Cover	1
▲	28	1045964	(002798-)	Screw, Hex, M4 X 0.70 X 10, Fmg, Blk	2
▲	29	367949	(002798-)	Latch	1
▲	30	1048512	(002798-)	Bracket, Mtg, Latch, Tank Cover	1
▲	31	08875	(002798-)	Rivet, Blind, .125d X 0.54 X .25d, Alm	2
	32	1027290	(000000-)	Filter, Soltn, 20mesh, Pm12 3.1d 02.6l	1
	33	377349	(000000-)	Fitting, Plstc, Pf12/Pf12, Bh	1
	34	69785	(000000-)	Fitting, Plstc, E90, Pf12/Pm12	1
	35	385685	(000000-)	Sensor, Level, Liq, 14vdc 01a .62-11	1
	36	1020428	(000000-002425)	Bracket, Latch, Cover	2
	37	09744	(000000-002425)	Screw, Hex, M6 X 1.00 X 12, Ss	4
	38	01684	(000000-002425)	Washer, Flat, 0.27b 0.69d .05, Ss	4
	39	1030617	(002426-002797)	Latch, Cover	2
	40	1029748	(002426-002797)	Bracket, Keeper, Latch	2
	41	382320	(002426-002797)	Screw, Pan, Phl, 12-16 X 0.50, F/ Plstc	4
	42	1017101	(000000-)	Plate, Label, Soltn Tank (ec-H20 only)	2
	43	360973	(000000-)	Screw, Pan, 12-16 X 0.50, F/ Plstc (ec-H20 only)	4

Home Find... Go To..

Fig. 55 - Solution Tank Drain Group

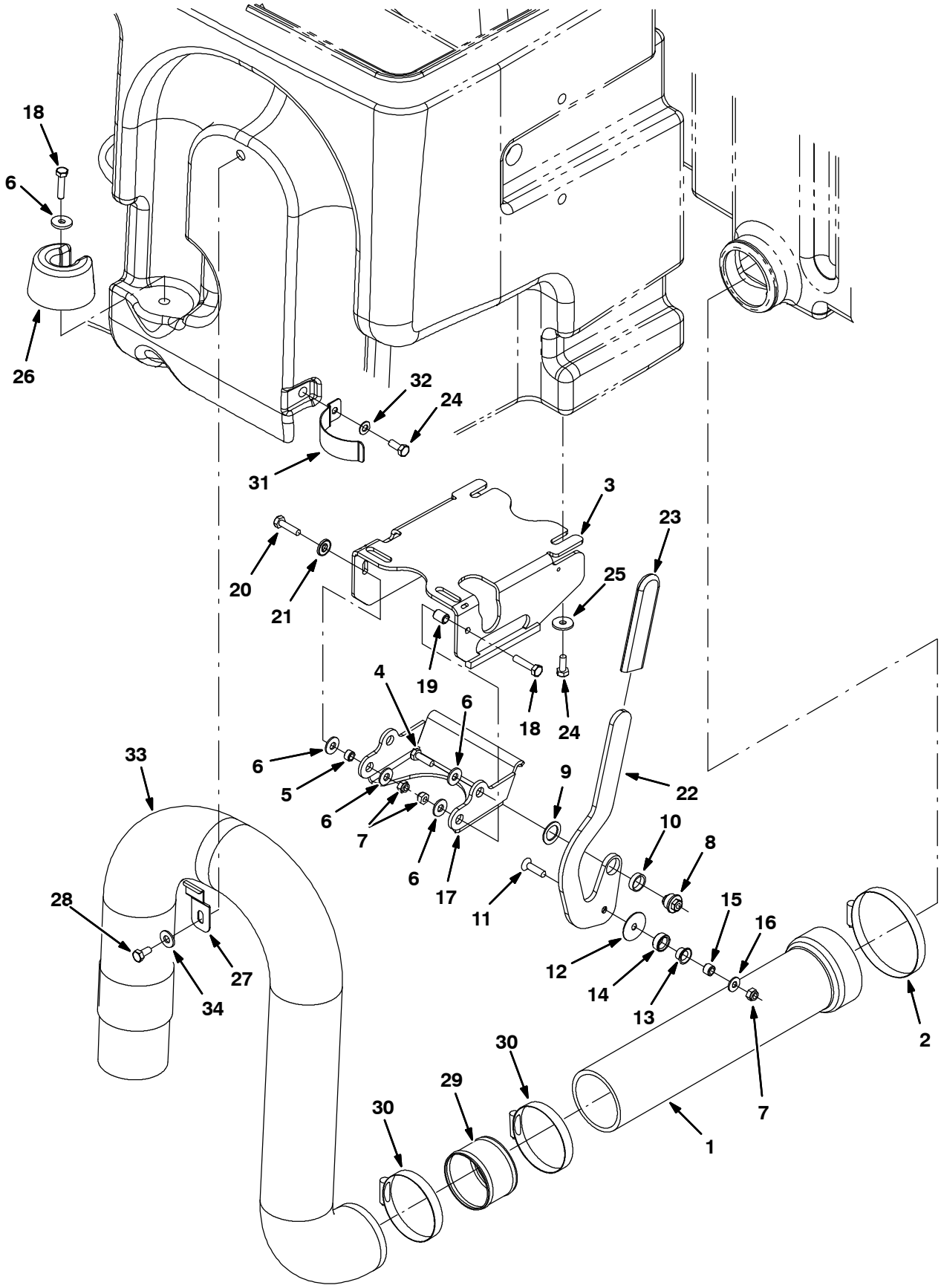

354447

Fig. 55 - Solution Tank Drain Group

Ref.	Part No.	Serial Number	Description	Qty.
1	9003793	(000000-)	Tube Kit, Tank, Soltn, Replmt	1
2	23498	(000000-)	Clamp, Hose, Wormdrive, 3.56-4.50d, .50w	1
3	1042003	(000000-)	Mount Wldt, Valve, Pinch, Rh	1
4	39277	(000000-)	Screw, Hex, M8 X 1.25 X 25, 8.8	1
5	222516	(000000-)	Sleeve, P/M, 0.31b 0.50d 0.3l [430ss]	1
6	32491	(000000-)	Washer, Flat, 0.31, Std	5
7	08713	(000000-)	Nut, Hex, Lock, M8 X 1.25, Nl, Ss	3
8	1024599	(000000-)	Bushing, Eccentric, Adj	1
9	1026051	(000000-)	Washer, Flat, 0.79b 1.18d .06, Nyl	1
10	74090	(000000-)	Bushing, Sleeve, 0.75b 0.88d 0.25l	1
11	79506	(000000-)	Screw, Flt, M8 X 1.25 X 30, Ss	1
12	1028701	(000000-)	Washer, Thrust, 0.34b 1.50d .06	1
13	15648	(000000-)	Bushing, Flng, 0.50b 0.59d 0.38l	1
14	1028691	(000000-)	Roller, Brg	1
15	1028690	(000000-)	Tube, 0.50d 0.32b 00.4l, Ss	1
16	1017218	(000000-)	Washer, Flat, 0.32b 1.00d .12, Ss	1
17	1024535	(000000-)	Arm, Pinch	1
18	06955	(000000-)	Screw, Hex, M8 X 1.25 X 35, 8.8	2
19	80395	(000000-)	Sleeve, P/M, 0.31b 0.50d 0.7l [430ss]	1
20	76570	(000000-)	Screw, Hex, M8 X 1.25 X 30, 8.8	1
21	41186	(000000-)	Washer, Flat, Belleville, .31	1
22	1026727	(000000-)	Handle, Valve, Pinch, Rh	1
23	1023502	(000000-)	Grip, Handle	1
24	09740	(000000-)	Screw, Hex, M8 X 1.25 X 20, Ss	5
25	1017218	(000000-)	Washer, Flat, 0.32b 1.00d .12, Ss	4
26	1022137	(000000-)	Plug, Hose, Pyu	1
27	1025480	(000000-)	Bracket, Retaining, Hose	1
28	15675	(000000-)	Screw, Hex, M8 X 1.25 X 16, Ss	1
29	1041953	(000000-)	Tube, 2.90id 3.00od 02.4l, Ss	2
30	43555	(000000-)	Clamp, Hose, Wormdrive, 2.50-3.50d, .50w	2
31	1024558	(000000-)	Strap, Retaining, Hose	1
32	39349	(000000-)	Washer, Flat, 0.31 Sae	1
33	1019424	(000000-)	Hose, Drain, 3.00id X 48.0l	1
34	01685	(000000-)	Washer, Flat, 0.31, Ss	2

Fig. 56 - Solution Control Group

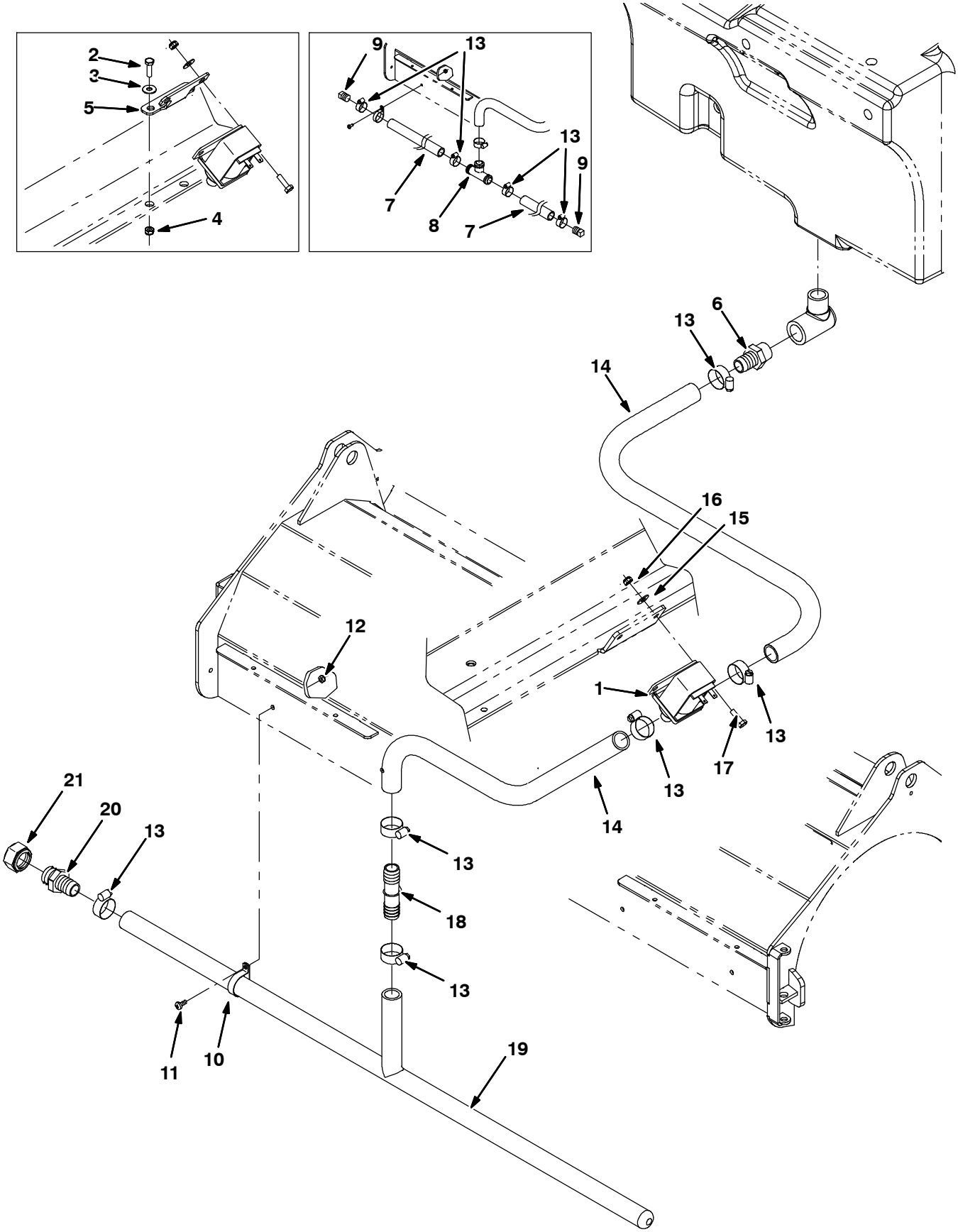

354448

Fig. 56 - Solution Control Group

Ref.	Part No.	Serial Number	Description	Qty.
1	1022088	(000000-)	Valve Assy, Water, Solenoid , 12vdc	1
2	08716	(000000-002241)	Screw, Hex, M6 X 1.0 X 20, Ss	2
3	01684	(000000-002241)	Washer, Flat, 0.25, Ss	2
4	08712	(000000-002241)	Nut, Hex, Lock, M6 X 1.0, Ss, Nl	2
5	1028074	(000000-002241)	Bracket, Mtg, Valve	1
6	79273-2	(000000-)	Fitting, Plstc, Str, Bm12/Pm12	1
7	1029185	(000000-002143)	Tube, Distribution, Water	2
8	41315	(000000-002143)	Fitting, Plstc, Tee, Bm12/Bm12/Bm12	1
9	17521	(000000-002143)	Fitting, Pipe, Plug, Pm08, Sq Head	2
10	50544	(000000-)	Clamp, Cable, Ss, 1.12d X 0.38w, 1h	6
11	09200	(000000-)	Screw, Pan, M5 X 0.8 X 12, Ss	6
12	09739	(000000-)	Nut, Hex, Lock, M5 X 0.8, Nl, Ss	6
13	63810	(000000-)	Clamp, Hose, Wormdrive, 0.56-1.06d, .56w	8
14	1015045	(000000-)	Hose, Afmkt, Pvc, Brd 0.75id 08ft	1
15	01684	(000000-)	Washer, Flat, 0.25, Ss	2
16	08712	(000000-)	Nut, Hex, Lock, M6 X 1.0, Ss, Nl	2
17	08716	(000000-)	Screw, Hex, M6 X 1.0 X 20, Ss	2
18	1038074	(002144-)	Fitting, Plstc, Str, Bm12/Bm12	1
19	1036997	(002144-)	Manifold, Bar, Spray, 37.5inch	1
20	79273-2	(002144-)	Fitting, Plstc, Str, Bm12/Pm12	1
21	1039064	(002144-)	Fitting, Plstc, Cap, Pf12 Hex	1

Fig. 57 - Recovery Tank Group

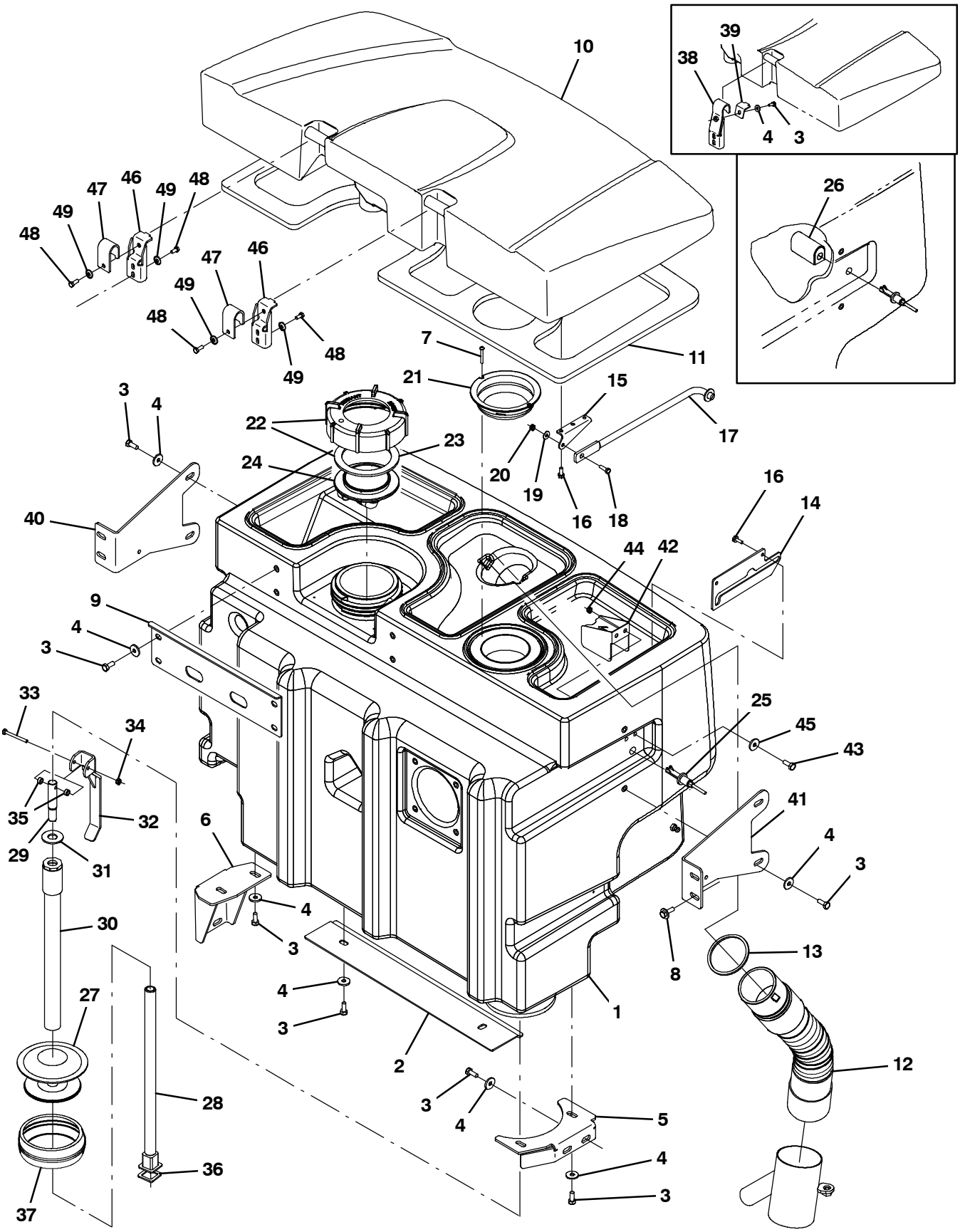

354449

Fig. 57 - Recovery Tank Group

	Ref.	Part No.	Serial Number	Description	Qty.
	1	1021419	(000000-)	Tank, Recvy, Trimmed	1
	2	1024403	(000000-)	Plate, Tank, Bottom	1
	3	09740	(000000-)	Screw, Hex, M8 X 1.25 X 20, Ss	17
	4	1017218	(000000-)	Washer, Flat, 0.32b 1.00d .12, Ss	15
	5	1020335	(000000-)	Bracket, Sppt, Tank, Lh	1
	6	1020331	(000000-)	Bracket, Sppt, Tank, Rh	1
	7	382320	(000000-)	Screw, Pan, #12-16 X 0.50, F/ Plstc	2
	8	1037346	(000000-)	Screw, Hex, M8 X 1.25 X 25, 9.8, Sems	4
	9	1021090	(000000-)	Plate, Sppt, Tank	1
	10	1022167	(000000-)	Cover, Tank, Recvy, Trimmed	1
	11	1021879	(000000-)	Gasket, Cover, Recvy Tank	1
	12	1031610	(000000-)	Hose Assy, Sqge	1
	13	1021920	(000000-)	Gasket, 3.23id 3.63od .16th, Ure	1
	14	1025620	(000000-)	Plate, Mtg, Prop Rod	1
	15	1025619	(000000-)	Bracket, Mtg, Prop Rod	1
	16	1046798	(000000-)	Screw, Hex, .25-14 X 0.75, Fmg/Ab, Ss	4
	17	54615	(000000-)	Arm Wldt, Safety, Sppt, Seat, .38d 10.1l	1
	18	08716	(000000-)	Screw, Hex, M6 X 1.0 X 20, Ss	1
	19	01684	(000000-)	Washer, Flat, 0.25, Ss	1
	20	08712	(000000-)	Nut, Hex, Lock, M6 X 1.0, Ss, Nl	1
	21	1026014	(000000-)	Screen, Vacuum	1
▽	22	24358	(000000-)	Cap Assy, Tank, Drain	1
▲	23	1031699	(000000-)	Gasket, 4.05id 5.29od .19 [Buna]	1
	24	86636	(000000-)	Cover, Tank	1
	25	385685	(000000-)	Sensor, Level, Liq, 14vdc 01a .62-11	1
	26	9003449	(000000-002024)	Cover Kit, Switch, Float, Repair	1
▽		9003313	(000000-)	Plug Kit, Drain, Recvy, Ci [M20 & T20]	1
▲	27	1022370	(000000-)	Plug, Drain, Expandable, 4.75-6.00	1
▲	28	1028328	(000000-)	Tube Wldt, Plug, Drain	1
▲	29	1028173	(000000-)	Pin, Lift, Drain	1
▲	30	1028570	(000000-)	Tube Assy, Plug, Drain	1
▲	31	1028522	(000000-)	Washer, Flat, .78b 1.75d .18, Ss	1
▲	32	1028211	(000000-)	Handle Wldt, Drain	1
▲	33	58979	(000000-)	Screw, Hex, M6 X 1.0 X 55, Ss	1
▲	34	08712	(000000-)	Nut, Hex, Lock, M6 X 1.0, Ss, Nl	1
▲	35	360801	(000000-)	Sleeve, 0.31b 0.50d 0.3l, Ss	2
▲	36	1035044	(000000-)	Seal, Shaft, Drain Plug	1
▲	37	1039652	(000000-)	Seal, Plug, Drain, Nitrile	1
	38	1020065	(000000-002418)	Bracket, Mtg, Cover (Replaced by 9003893)	2
	39	1020263	(000000-002418)	Bracket, Retaining, Cover (Replaced by 9003893)	2
	40	1038941	(000000-)	Bracket, Sppt, Tank, Rh	1
	41	1038927	(000000-)	Bracket, Sppt, Tank, Lh	1
	42	1037816	(002025-)	Bracket, Protector, Float Switch	1
	43	09007	(002025-)	Screw, Hex, M6 X 1.00 X 25, Ss	2
	44	08712	(002025-)	Nut, Hex, Lock, M6 X 1.00, Ss, Nl	2
	45	76426	(002025-)	Washer, Sealing, 0.28b 0.75d Ss, Neo	2
	46	1039072	(002419-)	Bracket, Sppt, Cover, Tank, Recvy	2
	47	1039049	(002419-)	Bracket, Mtg, Cover, Recvy Tank	2
	48	16735	(002419-)	Screw, Hex, M8 X 1.25 X 16, 8.8	6
	49	32491	(002419-)	Washer, Flat, 0.31, Std	6

Fig. 58 - Recovery Tank Drain Group

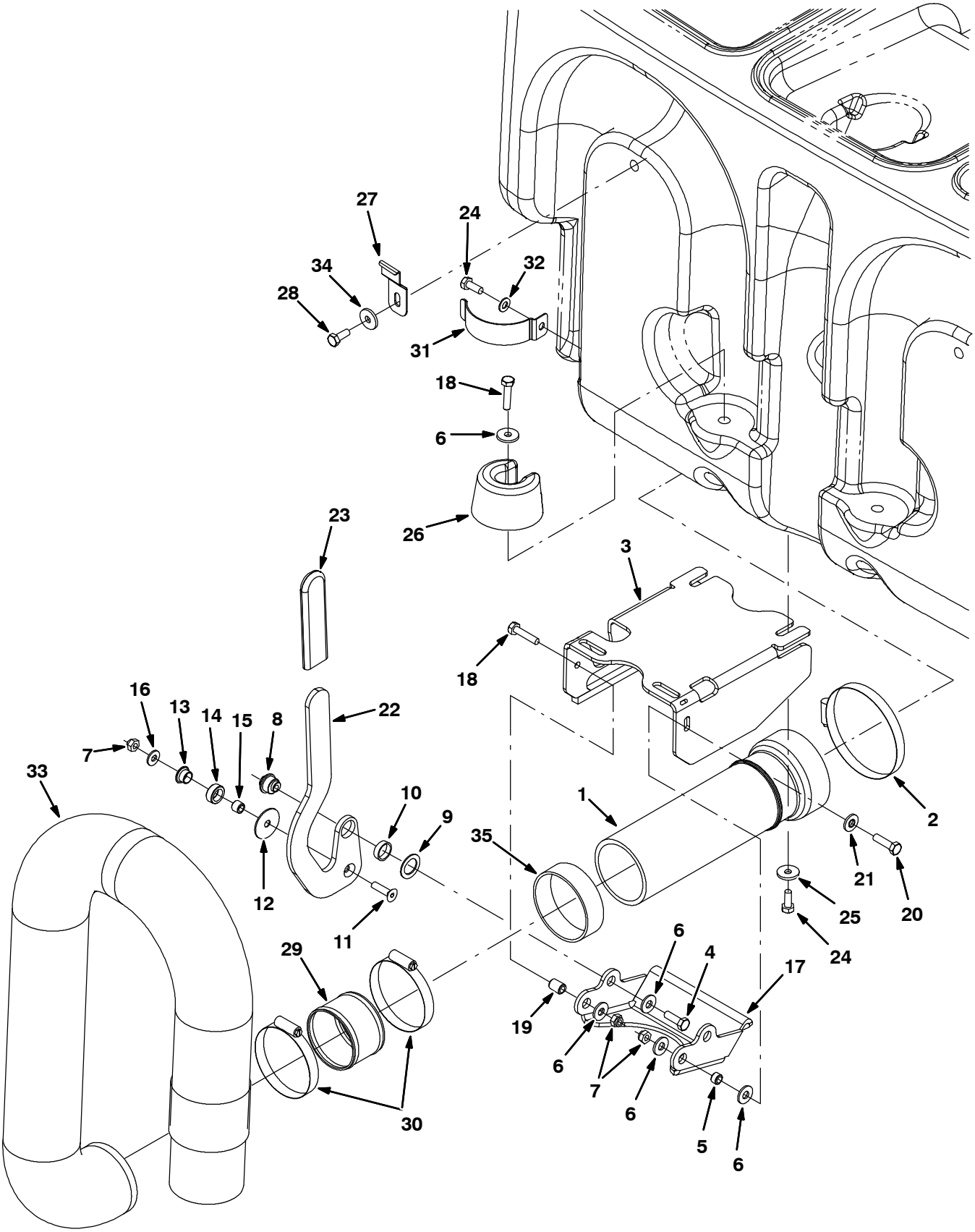

354450

Fig. 58 - Recovery Tank Drain Group

Ref.	Part No.	Serial Number	Description	Qty.
1	9003794	(000000-)	Tube Kit, Tank, Recvy, Replmt	1
2	23498	(000000-)	Clamp, Hose, Wormdrive, 3.56-4.50d, .50w	1
3	1042010	(000000-)	Mount Wldt, Valve, Pinch, Lh	1
4	39277	(000000-)	Screw, Hex, M8 X 1.25 X 25, 8.8	1
5	222516	(000000-)	Sleeve, P/M, 0.31b 0.50d 0.3l [430ss]	1
6	32491	(000000-)	Washer, Flat, 0.31, Std	5
7	08713	(000000-)	Nut, Hex, Lock, M8 X 1.25, Nl, Ss	3
8	1024599	(000000-)	Bushing, Eccentric, Adj	1
9	1026051	(000000-)	Washer, Flat, 0.79b 1.18d .06, Nyl	1
10	74090	(000000-)	Bushing, Sleeve, 0.75b 0.88d 0.25l	1
11	79506	(000000-)	Screw, Flt, M8 X 1.25 X 30, Ss	1
12	1028701	(000000-)	Washer, Thrust, 0.34b 1.50d .06	1
13	15648	(000000-)	Bushing, Flng, 0.50b 0.59d 0.38l	1
14	1028691	(000000-)	Roller, Brg	1
15	1028690	(000000-)	Tube, 0.50d 0.32b 00.4l, Ss	1
16	1017218	(000000-)	Washer, Flat, 0.32b 1.00d .12, Ss	1
17	1024535	(000000-)	Arm, Pinch	1
18	06955	(000000-)	Screw, Hex, M8 X 1.25 X 35, 8.8	2
19	80395	(000000-)	Sleeve, P/M, 0.31b 0.50d 0.7l [430ss]	1
20	76570	(000000-)	Screw, Hex, M8 X 1.25 X 30, 8.8	1
21	41186	(000000-)	Washer, Flat, Belleville, .31	1
22	1027039	(000000-)	Handle, Valve, Pinch, Lh	1
23	1023502	(000000-)	Grip, Handle	1
24	09740	(000000-)	Screw, Hex, M8 X 1.25 X 20, Ss	5
25	1017218	(000000-)	Washer, Flat, 0.32b 1.00d .12, Ss	2
26	1022137	(000000-)	Plug, Hose, Pyu	2
27	1025480	(000000-)	Bracket, Retaining, Hose	1
28	15675	(000000-)	Screw, Hex, M8 X 1.25 X 16, Ss	1
29	1041953	(000000-)	Tube, 2.90id 3.00od 02.4l, Ss	1
30	43555	(000000-)	Clamp, Hose, Wormdrive, 2.50-3.50d, .50w	2
31	1024558	(000000-)	Strap, Retaining, Hose	1
32	39349	(000000-)	Washer, Flat, 0.31 Sae	1
33	1019424	(000000-)	Hose, Drain, 3.00id X 48.0l	1
34	01685	(000000-)	Washer, Flat, 0.31, Ss	2
35	1031309	(000000-)	Tube, Acrylic, Hose, Pinch	1

Fig. 59 - Vacuum Fan Group, Scrubbing

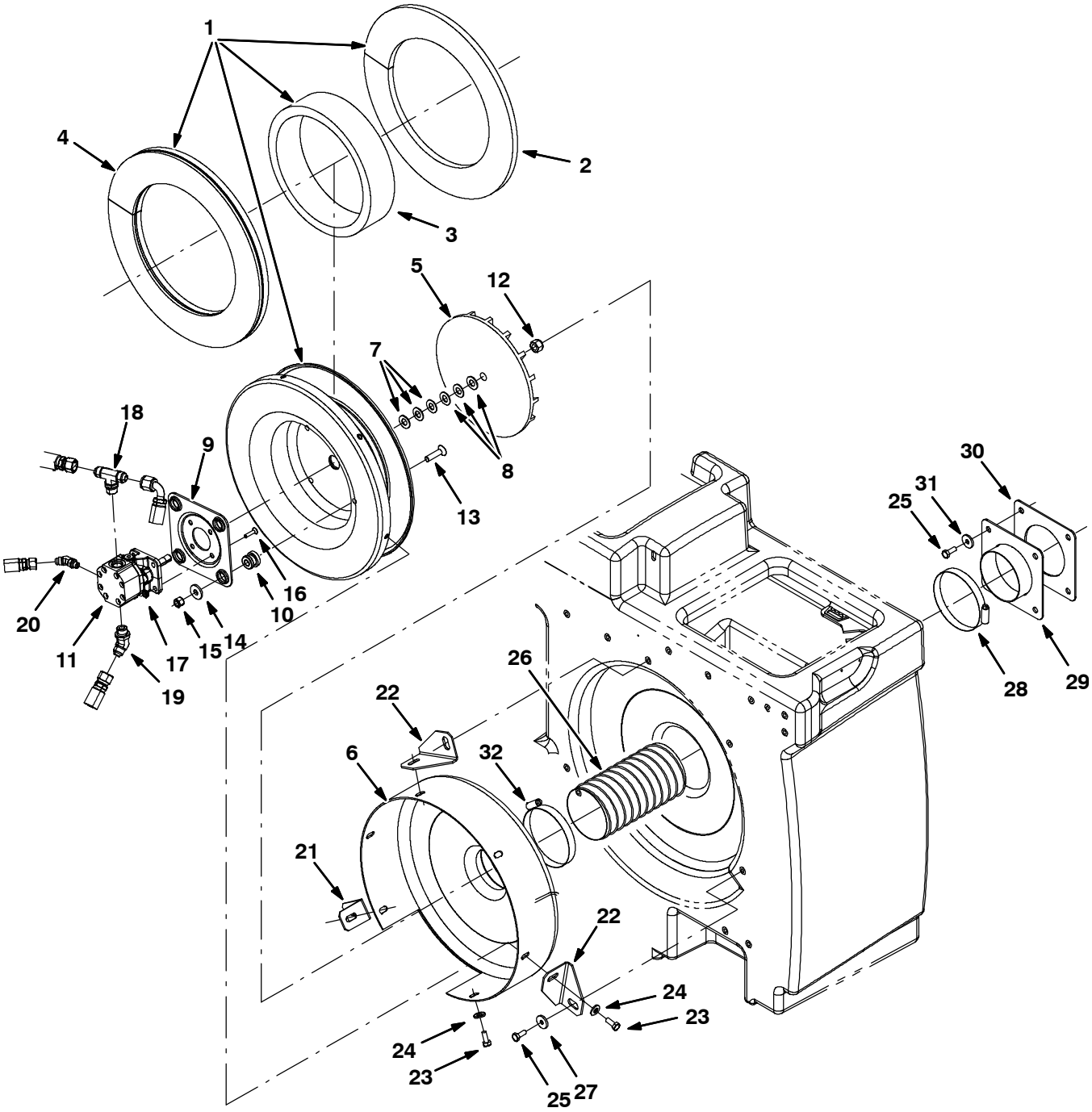

354451

Fig. 59 - Vacuum Fan Group, Scrubbing

	Ref.	Part No.	Serial Number	Description	Qty.
▽		9003455	(000000-)	Fan Kit, Scrub, Replmt [M20/T20]	1
▲▽	1	9002684	(000000-)	Housing Assy, Vacfan, Scrbr	1
▲▲	2	1025888	(000000-)	Insulation, Flame-Retardant, 0.50	1
▲▲	3	1025887	(000000-)	Insulation, Flame-Retardant, 0.75-0.88	1
▲▲	4	1025872	(000000-)	Insulation, Flame-Retardant, 0.75-0.88	1
▲	5	1041815	(000000-)	Impeller, 9.5" Dia, 18 Blade (Machined)	1
▲	6	57189	(000000-)	Housing Wldt, Vacfan, Front [528]	1
▲	7	75456-3	(000000-)	Shim, Washer, 0.88d 0.51b .020	3
▲	8	75456-4	(000000-)	Shim, Washer, 0.88d 0.51b .060	3
▲	9	54275A	(000000-)	Bracket, Mtg, Motor	1
▲	10	54274	(000000-)	Isolator, Vib, Bshg, 1.1d 0.6l .4b 0.78h	4
▲▽	11	9003461	(000000-)	Motor Kit, Replmt [M20&T20]	1
▲▲		00954	(000000-)	Key, Sq, 0.12 X 0.12, 1.00l (Included With Motor)	1
▲▲		74233	(000000-)	Kit, Seal, Motor, Hyd, Gear[Barns]	1
▲▲	12	41130	(000000-)	Nut, Low Crown, .50-20	1
▲▲	13	54861	(000000-)	Screw, Flt, .38-16 X 1.50, Al	4
▲▲	14	1014563	(000000-)	Washer, Flat, 0.40b 1.12d .12, Ss	4
▲▲	15	36643	(000000-)	Nut, Hex, Lock, .38-16, Nl, Thin	4
▲▲	16	39534	(000000-)	Screw, Flt, .25-20 X 1.00, Al	4
▲▲	17	32981	(000000-)	Nut, Hex, Lock, .25-20, Nl	4
▲▲	18	49933	(000000-)	Fitting, Hyd, Tee, Jm08/Jm08/Om08, Br	1
▲▲	19	42226	(000000-)	Fitting, Hyd, E45, Jm08/Om08	1
▲▲	20	392609	(000000-)	Fitting, Hyd, E45, Jm06/Om04	1
▲	21	1020320	(000000-)	Angle, Sppt, Fan	1
▲	22	1024891	(000000-)	Bracket, Mtg, Fan	2
▲	23	16931	(000000-)	Screw, Hex, M8 X 1.25 X 20, 8.8	6
▲	24	41186	(000000-)	Washer, Flat, Belleville, .31	6
	25	09740	(000000-)	Screw, Hex, M8 X 1.25 X 20, Ss	7
	26	1022377	(000000-)	Hose, Air-Intk, Flex 4.00id 18.0l	1
	27	1014563	(000000-)	Washer, Flat, 0.40b 1.12d .12, Ss	3
	28	79380	(000000-)	Clamp, Hose, Wormdrive, 3.75-4.62d, .62w	1
	29	1023754	(000000-)	Plate Wldt, Hose, Vacuum	1
	30	1024853	(000000-)	Gasket, Plt, Hose, Vacuum	1
	31	1017218	(000000-)	Washer, Flat, 0.32b 1.00d .12, Ss	4
	32	23498	(000000-)	Clamp, Hose, Wormdrive, 3.56-4.50D, .50W	1

Fig. 60 - Vacuum Fan Group, Sweeping

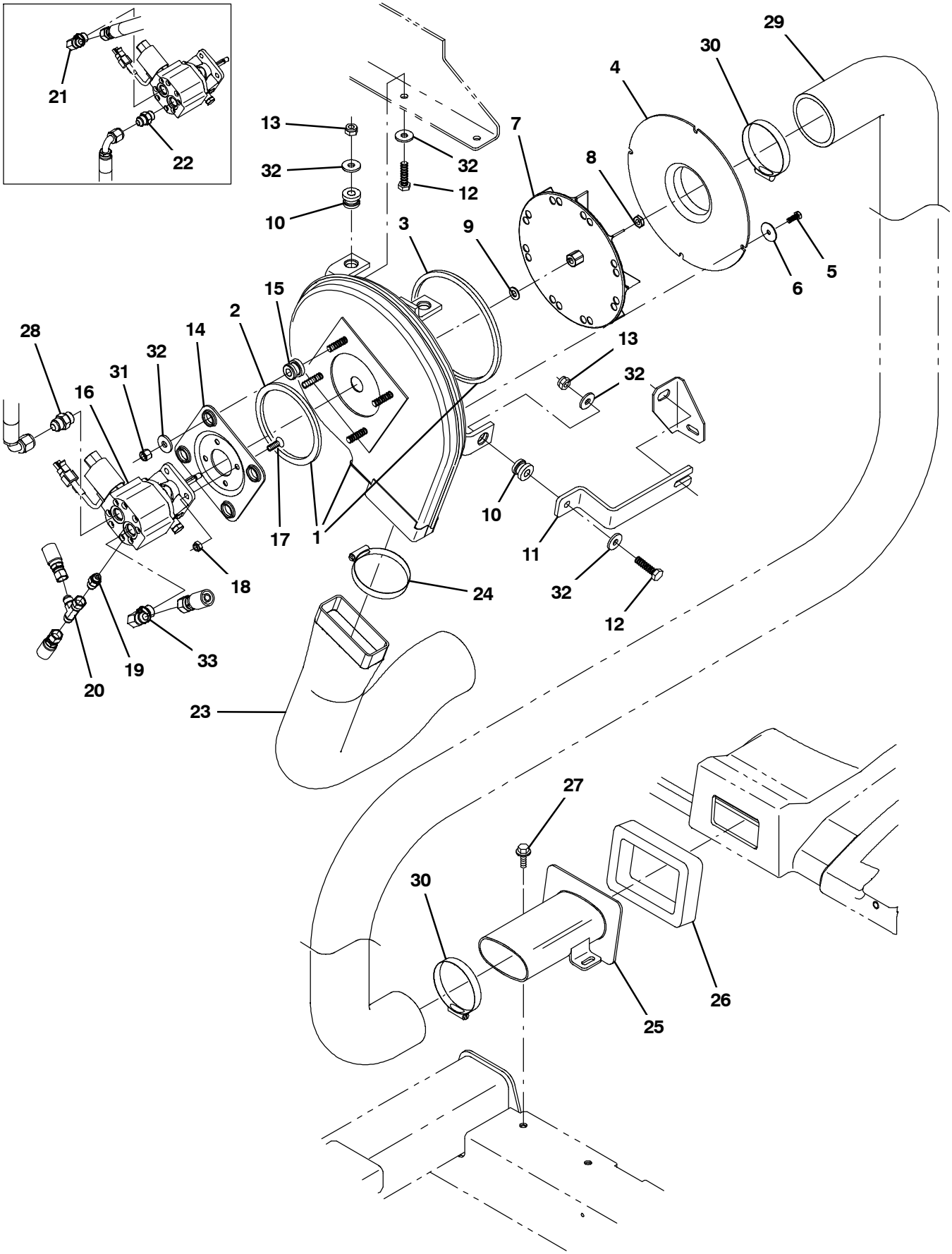

354452

Fig. 60 - Vacuum Fan Group, Sweeping

	Ref.	Part No.	Serial Number	Description	Qty.
▽	1	9002683	(000000-)	Housing Assy, Vacfan, Swpr	1
▲	2	59967	(000000-)	Seal, Ure, 0.38 0.75w 13.2l Adh	1
▲	3	59735	(000000-)	Seal, Ure, 0.38 0.75w 33.0l Adh	1
	4	1018216	(000000-)	Fan Wldt, Vac, Inlet	1
	5	34323	(000000-)	Screw, Hex, .25-20 X 0.75, Nl	4
	6	41178	(000000-)	Washer, Flat, 0.25 Fender	4
	7	74454	(000000-)	Impeller, 9.00d X 1.40w X 0.376b	1
	8	31241	(000000-)	Nut, Hex, Lock, .31-24, Nl, Thin	1
	9	32485	(000000-)	Washer, Flat, 0.38 Sae	1
	10	59649	(000000-)	Isolator, Vib, Bshg, 1.1d 0.6l .4b 0.78h	3
	11	1034388	(000000-)	Bar, Isolator, Vacfan [M20 2007]	1
	12	39285	(000000-)	Screw, Hex, M10 X 1.5 X 40, 8.8	3
	13	41430	(000000-)	Nut, Hex, Lock, M10 X 1.5, Nl	3
	14	54275A	(000000-)	Bracket, Mtg, Motor	1
	15	54274	(000000-)	Isolator, Vib, Bshg, 1.1d 0.6l .4b 0.78h	4
	16	53485	(000000-)	Motor, Hyd, Gear, [Ex] .194 R 3000 (See Breakdowns)	1
	17	07810	(000000-)	Screw, Flt, M8 X 1.25 X 25, 10.9	4
	18	08709	(000000-)	Nut, Hex, Lock, M8 X 1.25, Nl	4
	19	50960	(000000-)	Fitting, Hyd, Str, Jm06/Om04	1
	20	42215	(000000-)	Fitting, Hyd, Tee, Jf06/Jm06/Jm06, Run	1
	21	44868	(000000-001337)	Fitting, Hyd, E90, Jm08/Om08	1
	22	44869	(000000-001337)	Fitting, Hyd, Str, Jm08/Om08	1
	23	1025756	(000000-)	Muffler, Vacfan, 4.0id	1
	24	23498	(000000-)	Clamp, Hose, Wormdrive, 3.56-4.50d, .50w	1
	25	1025841	(000000-)	Tube, Transition, Casting	1
	26	1018209	(000000-)	Gasket, Hppr, Transition	1
	27	1037346	(000000-)	Screw, Hex, M8 X 1.25 X 25, 9.8, Sems	2
	28	44869	(001338-)	Fitting, Hyd, Str, Jm08/Om08	1
	29	1018252	(000000-)	Hose, Flex, Vacuum, 3.5d 32.0l	1
	30	23498	(000000-)	Clamp, Hose, Wormdrive, 3.56-4.50d, .50w	2
	31	36643	(000000-)	Nut, Hex, Lock, .38-16, Nl, Thin	4
	32	1014563	(000000-)	Washer, Flat, 0.40b 1.12d .12, Ss	10
	33	44868	(001338-)	Fitting, Hyd, E90, Jm08/Om08	1

Fig. 61 - Hydraulic Schematic (000000-002699)

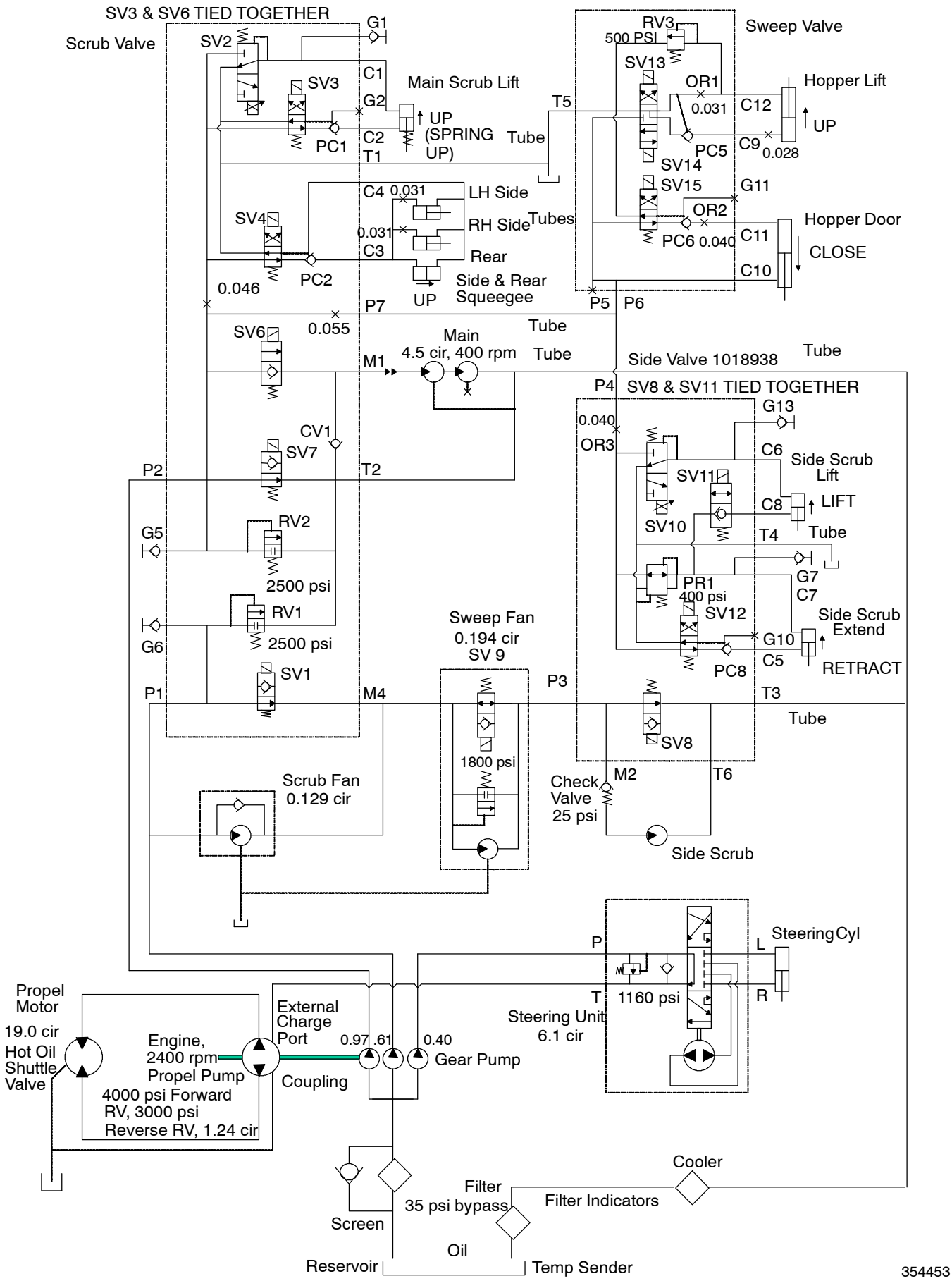

Home Find... Go To..

Fig. 62 - Hydraulic Schematic (002700-003297)

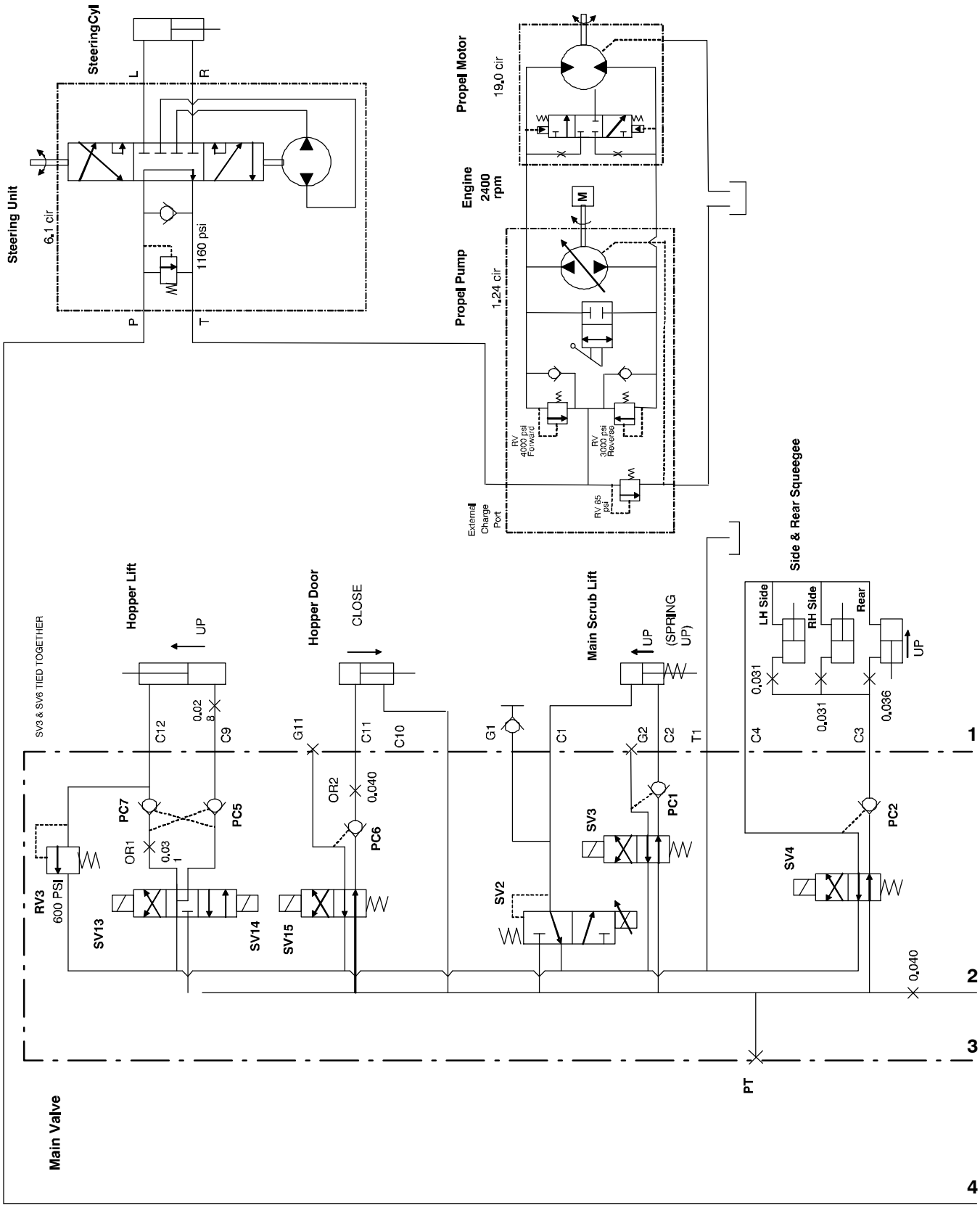

1024172 - 354453

Home Find... Go To..

Fig. 62 - Hydraulic Schematic (002700-003297)

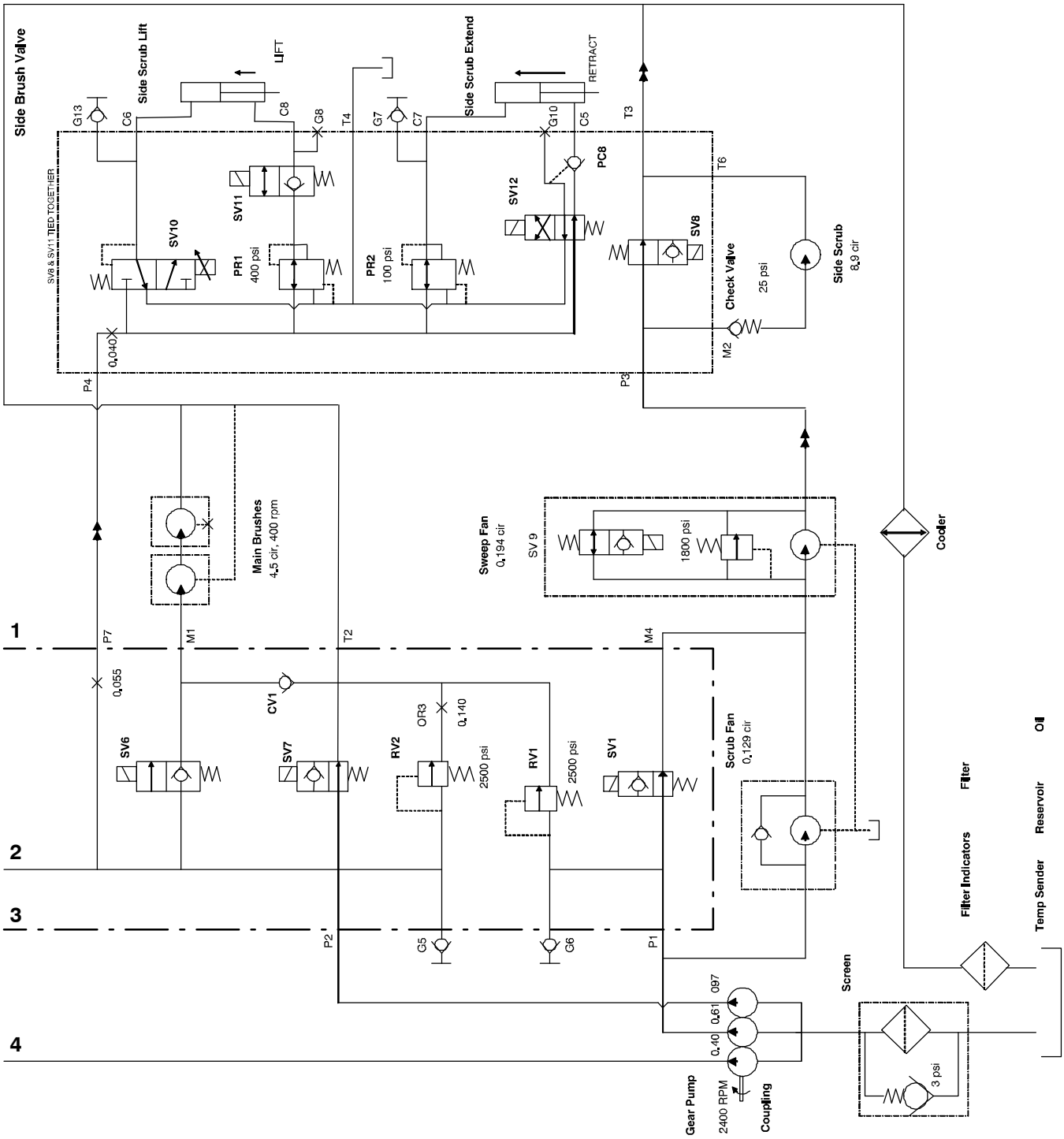

1024172 - 354453

Home Find... Go To..

Fig. 63 - Hydraulic Schematic (003298-)

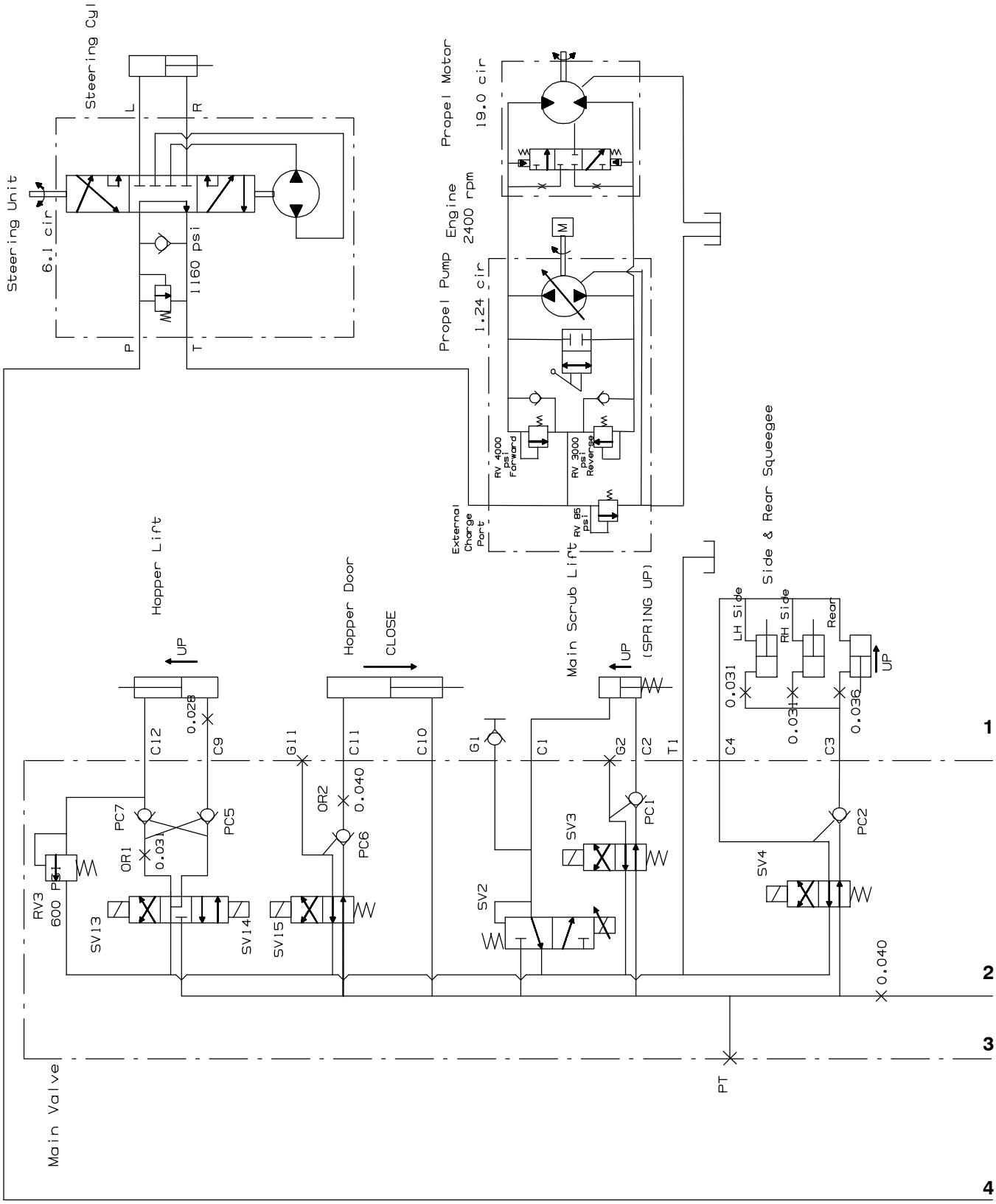

1034888- 354453

Fig. 63 - Hydraulic Schematic (003298-)

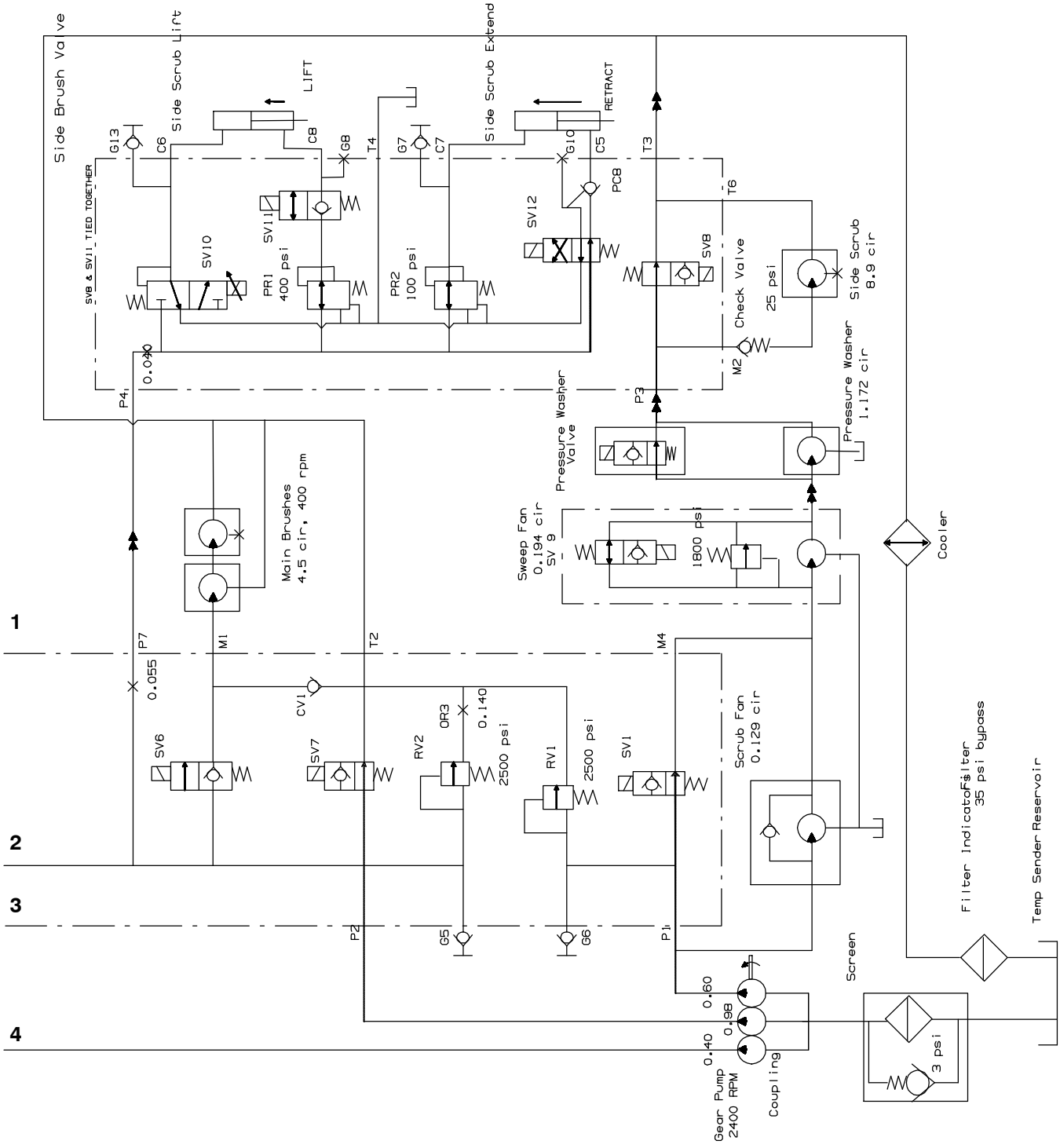

1034888- 354453

Home Find... Go To..

Fig. 64 - Hydraulic Hose Group, Steering and Propel

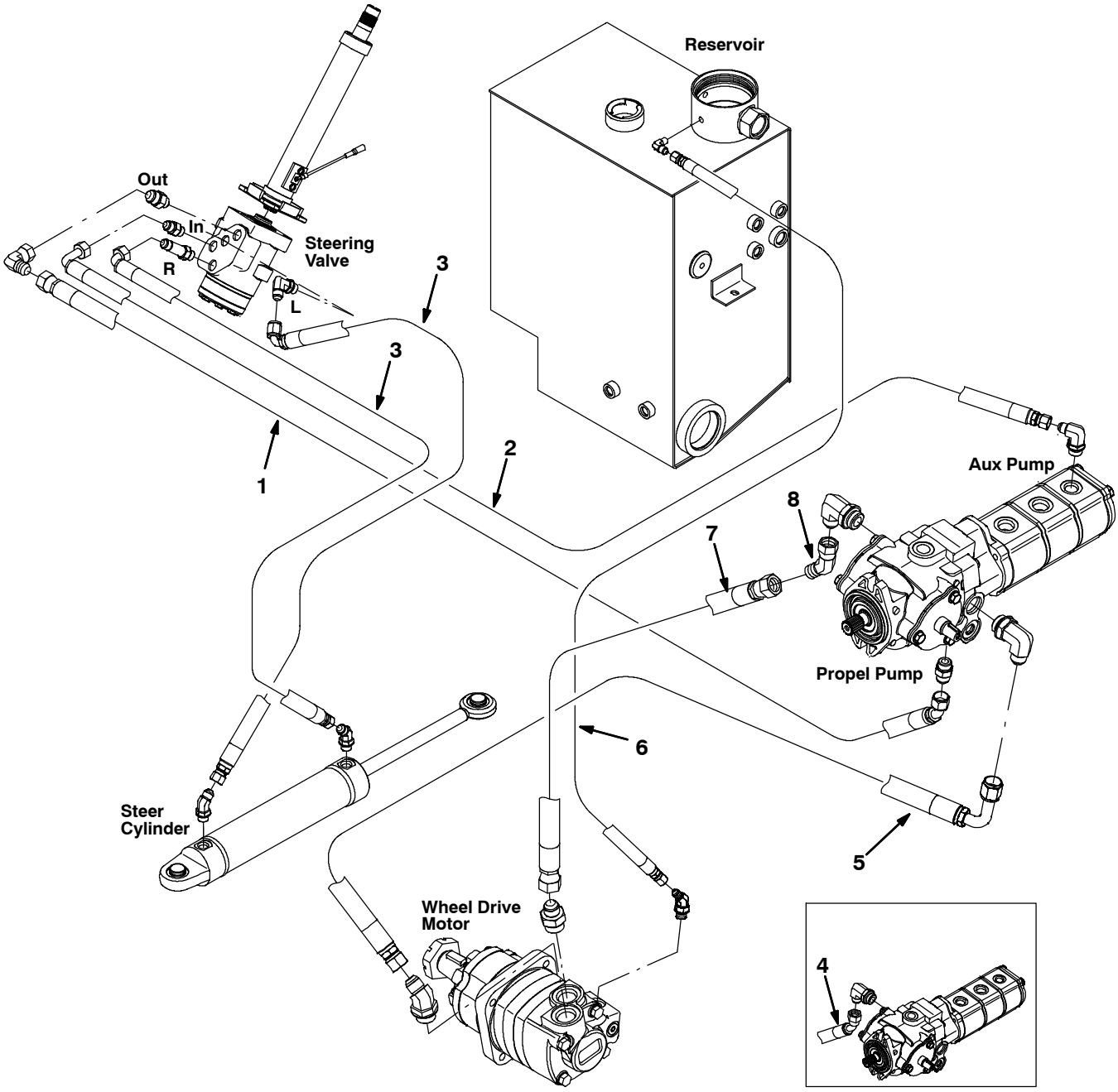

354392

Fig. 64 - Hydraulic Hose Group, Steering and Propel

Ref.	Part No.	Serial Number	Description	Qty.
1	1023609	(000000-)	Hose, Hyd, Tc08, Jf08e45/Jf08str, 96.0	1
2	1023608	(000000-)	Hose, Hyd, Tc06, Jf06e90/Jf06str, 104.0	1
3	396221	(000000-)	Hose, Hyd, Tc06, Jf06e90/Jf06str, 040.0	2
4	1023489	(000000-002183)	Hose, Hyd, Spcl, Jf10e45/Jf10str, 58.0 (Replaced by 1039148)	1
5	1023488	(000000-)	Hose, Hyd, Spcl, Jf10e90/Jf10str, 63.0	1
6	1030404	(000000-)	Hose, Hyd,Med04, Jf04str/Jf04str, 066.0	1
7	1038569	(002184-)	Hose, Hyd, Spcl, Jf10str/Jf10str, 56.5	1
8	54017	(002184-)	Fitting, Hyd, E45, Jf10/Jm10	1

Fig. 65 - Hydraulic Hose Group, Pump and Vacuum Fans

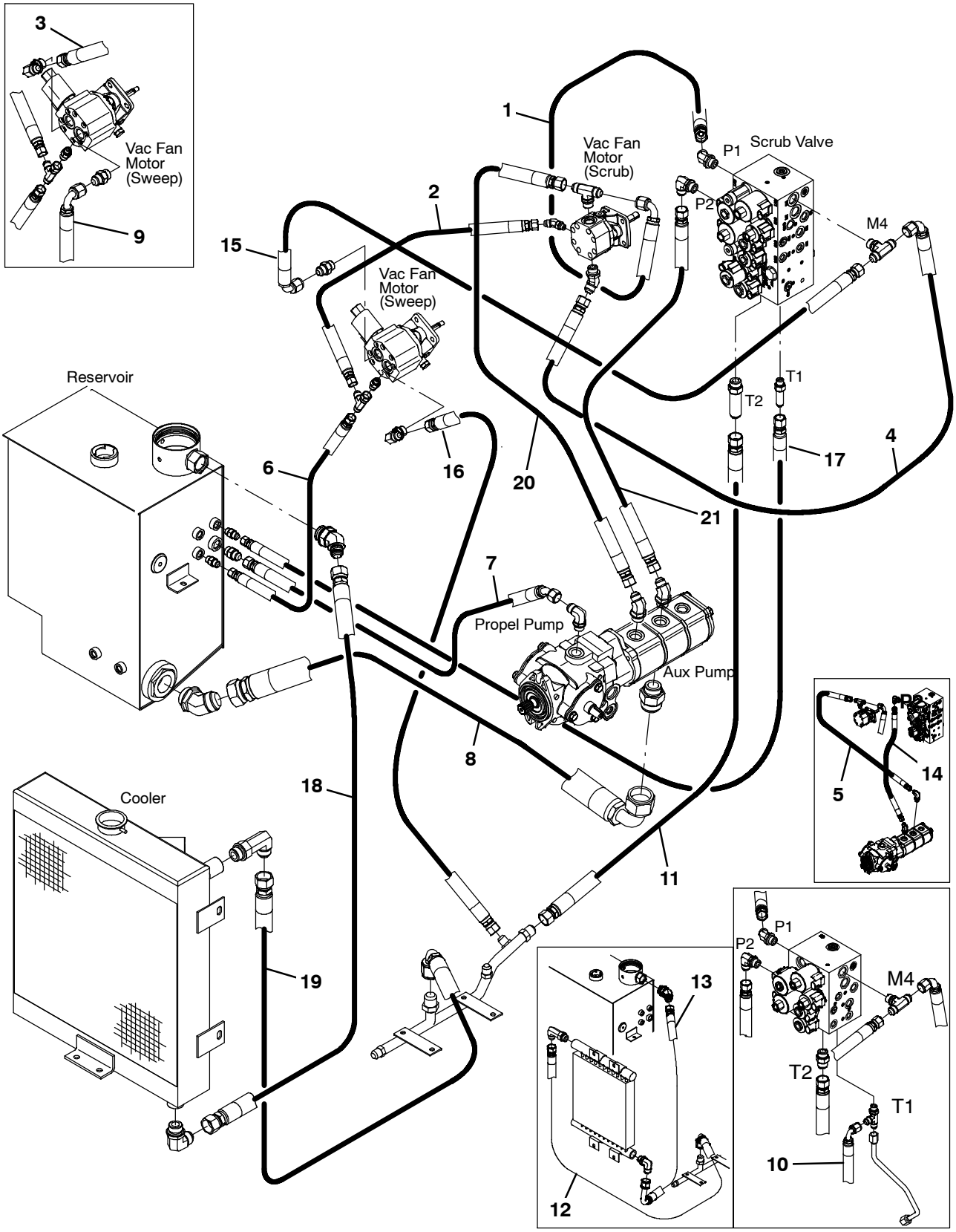

354393, M20G

Fig. 65 - Hydraulic Hose Group, Pump and Vacuum Fans

Ref.	Part No.	Serial Number	Description	Qty.
1	71741	(000000-)	Hose, Hyd, Tc08, Jf08e90/Jf08str, 046.0	1
2	361044	(000000-)	Hose, Hyd, Med06, Jf06str/Jf06str, 018.0	1
3	381862	(000000-001337)	Hose, Hyd, Tc08, Jf08str/Jf08str, 024.0	1
4	396255	(000000-)	Hose, Hyd, Tc08, Jf08str/Jf08e90, 031.0	1
5	1026645	(000000-003297)	Hose, Hyd, Tc08, Jf08e45/Jf08str, 26.0	1
6	16431	(000000-)	Hose, Hyd, Med06, Jf06str/Jf06str, 022.0	1
7	1023607	(000000-)	Hose, Hyd, Med08, Jf08str /Jf08e45, 21.0	1
8	1023611	(000000-)	Hose, Hyd, Suc20, Jf20str /Jf20e90, 29.0	1
9	396266	(000000-001337)	Hose, Hyd, Med08, Jf08e90/Jf08str, 031.0	1
10	71735	(000000-002699)	Hose, Hyd, Med06, Jf06e90/Jf06str, 042.0	1
11	1025547	(000000-002699)	Hose, Hyd, Med10, Jf10str/Jf10str, 41.0	1
11	1040655	(002700-)	Hose, Hyd, Med10, Jf10Str/Jf10Str, 036.0	1
12	396438	(000000-003038)	Hose, Hyd, Tc12, Jf12e90/Jf12str, 044.0	1
13	1023487	(000000-003038)	Hose, Hyd, Med12, Jf12e90/Jf12str, 50.0	1
14	1023606	(000000-003297)	Hose, Hyd, Tc08, Jf08str/Jf08str, 21.0	1
15	381858	(001338-002699)	Hose, Hyd, Tc08, Jf08e90/Jf08str, 024.0	1
15	1040216	(002700-)	Hose, Hyd, Tc08, Jf08E90/Jf08Str, 029.0	1
16	1036945	(001338-)	Hose, Hyd, Tc08, Jf08str/Jf08str, 031.0	1
17	71556	(002700-)	Hose, Hyd, Med06, Jf06Str/Jf06Str, 042.0	1
18	1050437	(003039-)	Hose, Hyd, Med12, Jf12str/Jf12str, 052.0	1
19	1050436	(003039-)	Hose, Hyd, Med12, Jf12e90/Jf12str, 029.0	1
20	1026645	(003298-)	Hose, Hyd, Tc08, Jf08E45/Jf08Str, 026.0	1
21	1023606	(003298-)	Hose, Hyd, Tc08, Jf08Str/Jf08Str, 021.0	1

Fig. 66 - Hydraulic Hose Group, Brush and Hopper

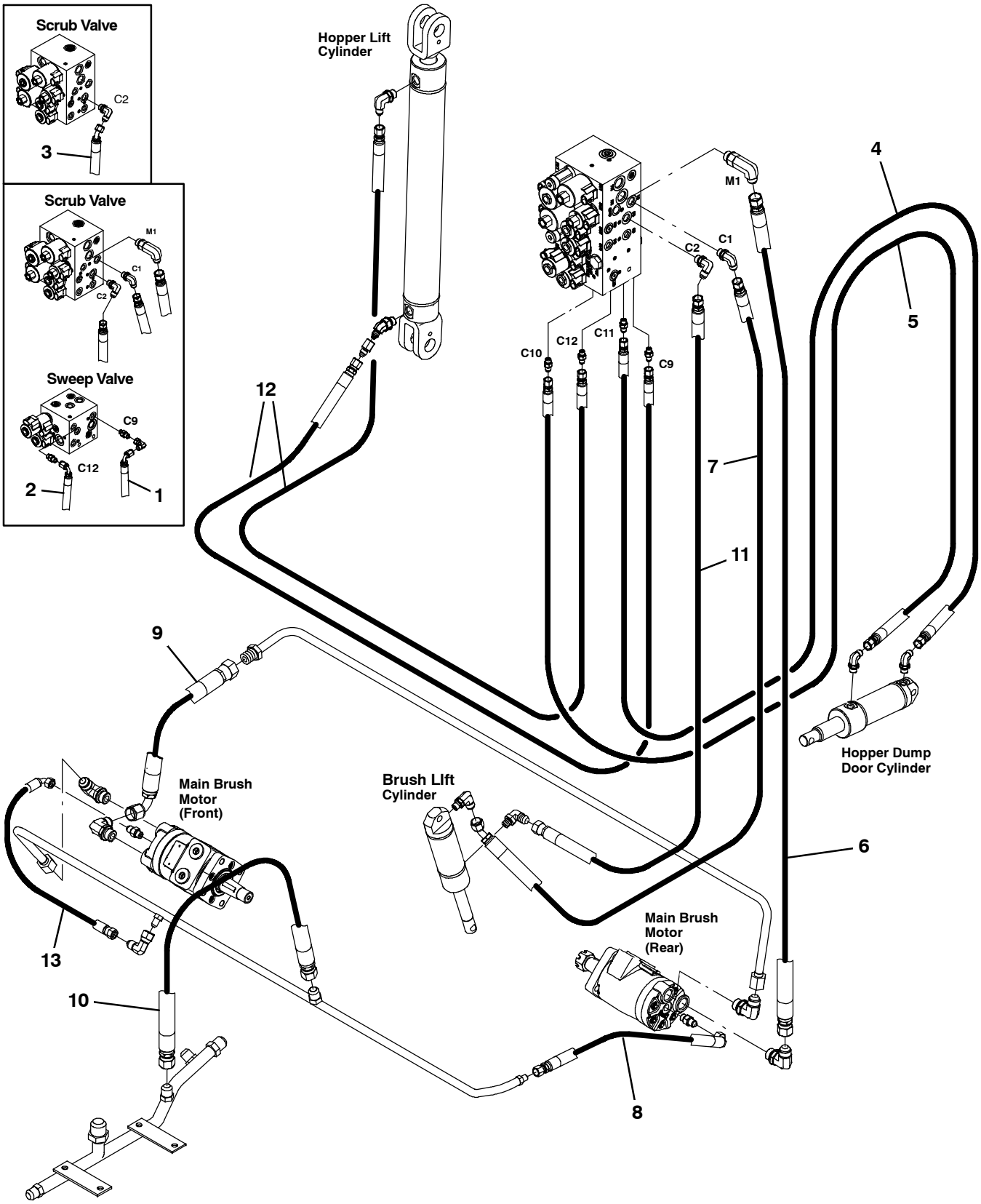

354390

Fig. 66 - Hydraulic Hose Group, Brush and Hopper

Ref.	Part No.	Serial Number	Description	Qty.
1	1027320	(000000-002699)	Hose, Hyd, Tc04, Jf04str /Jf04e90, 88.0	1
2	1027321	(000000-002699)	Hose, Hyd, Tc04, Jf04str /Jf04e90, 70.0	1
3	1025548	(000000-001337)	Hose, Hyd, Tc06, Jf06str /Jf06e45, 54.0	1
4	1026733	(000000-002699)	Hose, Hyd, Spcl, Jf04str/Jf04str, 115.0	1
4	1042775	(002700-)	Hose, Hyd, Spcl, Jf04str/Jf04str, 133.0	1
5	1024688	(000000-002699)	Hose, Hyd, Spcl, Jf04str/Jf04str, 121.0	1
5	1042776	(002700-)	Hose, Hyd, Spcl, Jf04str/Jf04str, 127.0	1
6	1024764	(000000-)	Hose, Hyd, Tc08, Jf08str/Jf08str, 48.0	1
7	1023769	(000000-)	Hose, Hyd, Tc 06, Jf06str /Jf06e45, 56.0	1
8	57946	(000000-)	Hose, Hyd, Med04, Jf04e90/Jf04str, 016.0	1
9	1025544	(000000-)	Hose, Hyd, Tc08, Jf08e90/Jf08str, 13.0	1
10	51754	(000000-)	Hose, Hyd, Med08, Jf08str/Jf08str, 022.0	1
11	1036939	(001338-)	Hose, Hyd, Tc06, Jf06str/Jf06str, 054.0	1
12	1040628	(002700-)	Hose, Hyd, Tc04, Jf04str/Jf04str, 096.0	2
13	387281	(003057-)	Hose, Hyd, Tc04, Jf04e90/Jf04str, 020.0	1

Fig. 67 - Hydraulic Hose Group, Squeegee Lift

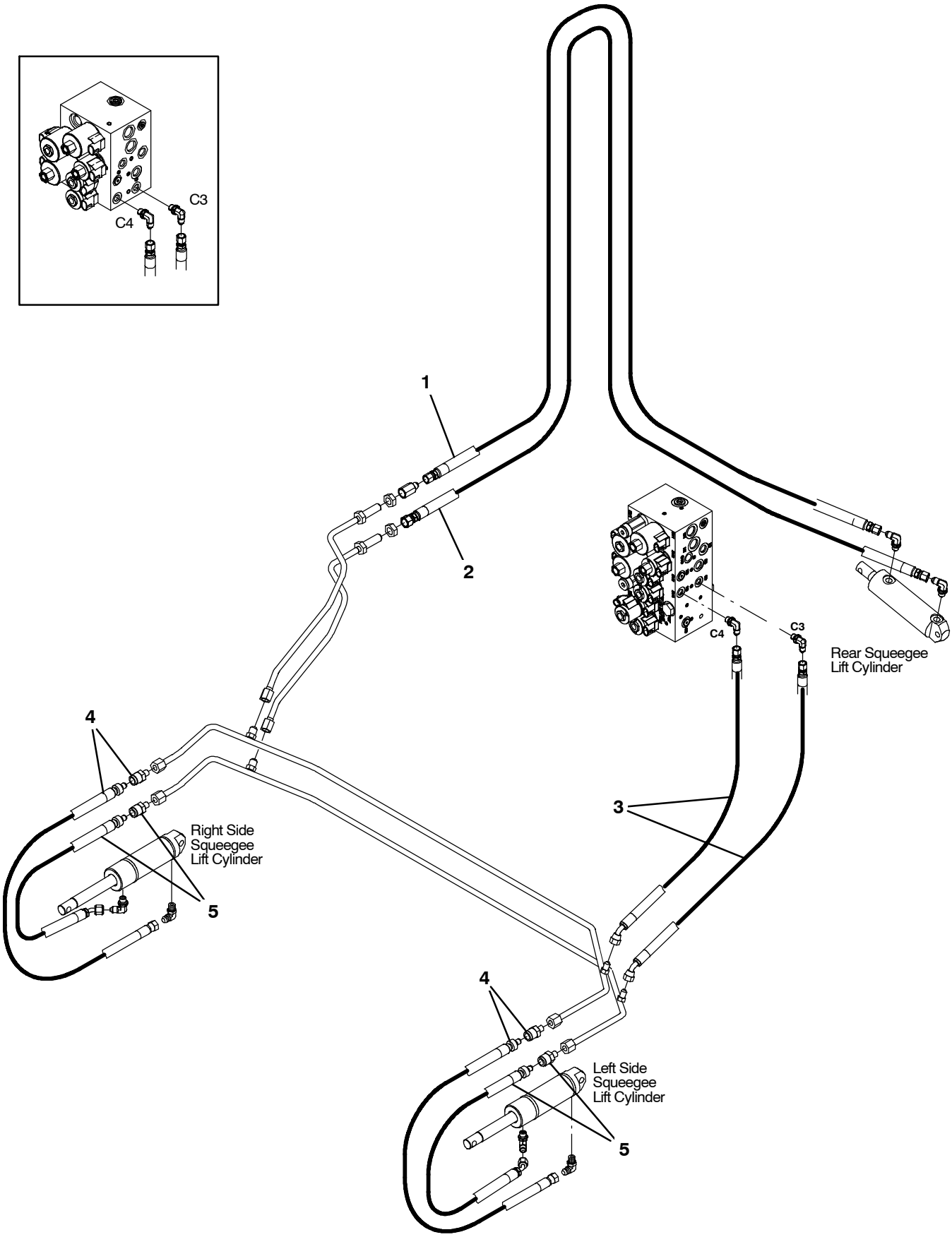

354391

Fig. 67 - Hydraulic Hose Group, Squeegee Lift

Ref.	Part No.	Serial Number	Description	Qty.
1	1024688	(000000-)	Hose, Hyd, Spcl, Jf04str/Jf04str, 121.0	1
2	1025551	(000000-)	Hose, Hyd, Spcl, Jf04str/Jf06str, 125.0	1
3	1030709	(000000-)	Hose, Hyd,Tc 04, Jf04str /Jf04e45 , 35.0	2
4	1037042	(000000-002555)	Hose, Hyd, Tc04, Jf04e45/Qm06, 028.0	2
4	1045759	(002556-)	Hose, Hyd, Tco4, Jf04Str/Qm06, 028.0	2
5	1037053	(000000-)	Hose, Hyd, Tc04, Jf04e45/Qm06, 026.0	2

Fig. 68 - Hydraulic Pumps Group

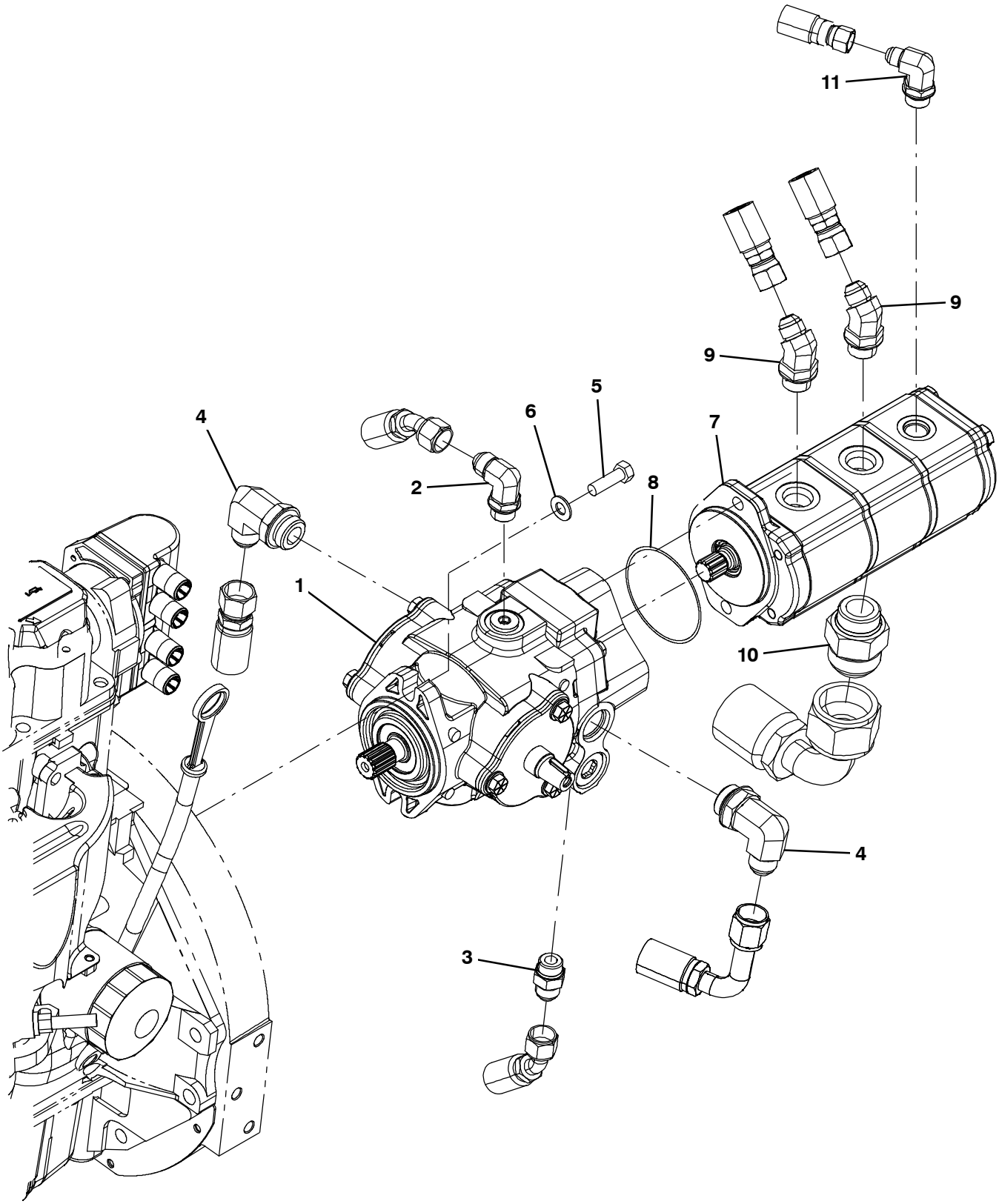

354454

Fig. 68 - Hydraulic Pumps Group

Ref.	Part No.	Serial Number	Description	Qty.
1	1024251	(000000-)	Pump, Hyd, Piston, Var, 1.24 4000, Cw (See Breakdowns)	1
2	44868	(000000-)	Fitting, Hyd, E90, Jm08/Om08	1
3	44869	(000000-)	Fitting, Hyd, Str, Jm08/Om08	1
4	53076	(000000-)	Fitting, Hyd, E90, Jm10/Om12	2
5	21198	(000000-)	Screw, Hex, .38-16 X 1.25, 5	22
6	32485	(000000-)	Washer, Flat, 0.38 Sae	2
7	9007142	(000000-003297)	Pump Kit, Mtg, Aux, Ci [M20 & T20]	1
7	1059195	(003298-)	Pump, Hyd, Gear, Ext, 3, 00.97 2500, Cw	1
8	65145-1	(000000-)	Seal, Org, .069 X 3.06id	11
9	47513	(000000-)	Fitting, Hyd, E45, Jm08/Om10	2
10	67811	(000000-)	Fitting, Hyd, Str, Jm20/Om16	1
11	47512	(000000-)	Fitting, Hyd, E90, Jm06/Om08	1

Fig. 69 - Hydraulic Cooler and Tubes Group

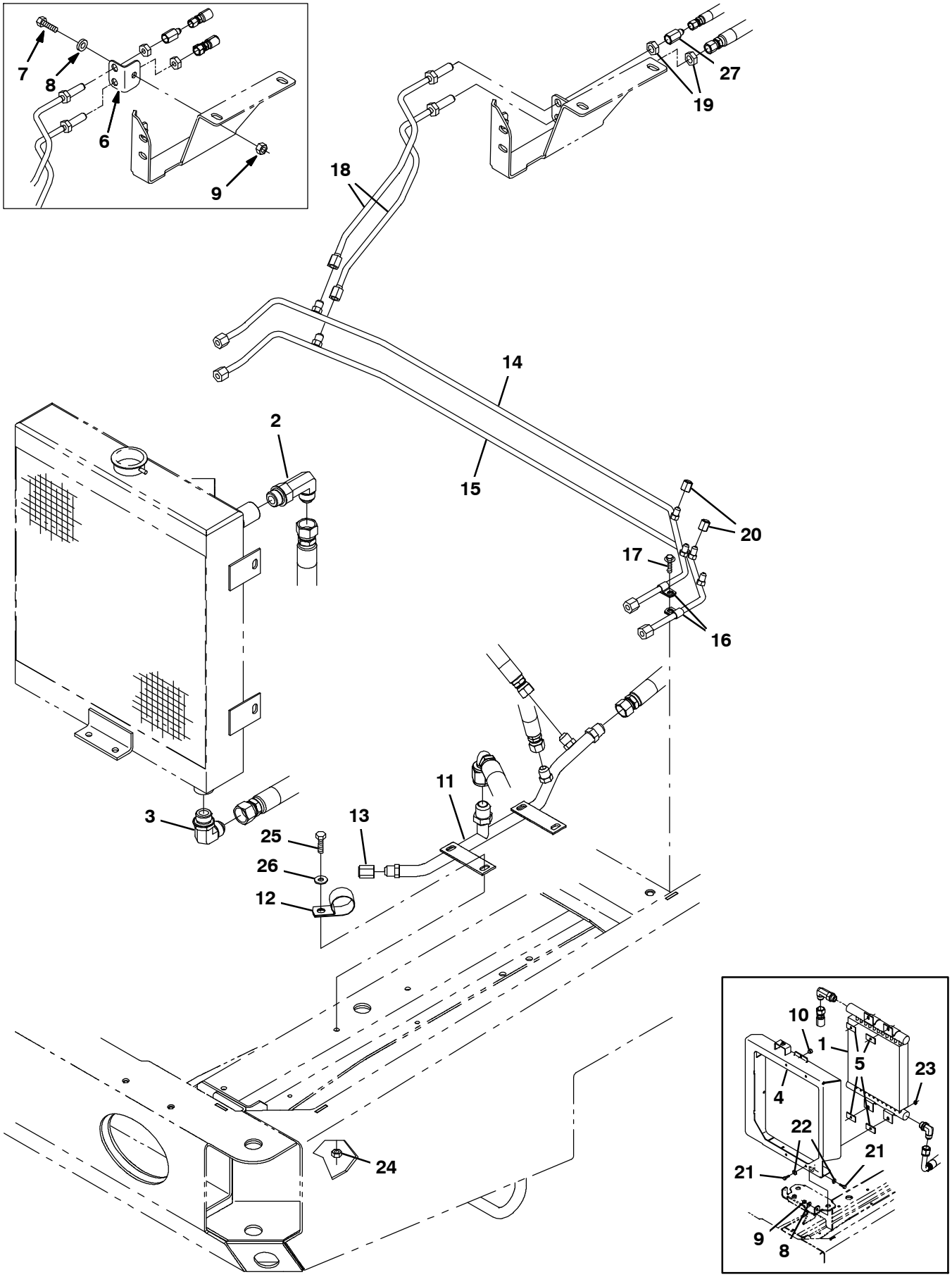

354455

Fig. 69 - Hydraulic Cooler and Tubes Group

Ref.	Part No.	Serial Number	Description	Qty.
1	13698	(000000-003038)	Cooler, Hyd, 25gpm 325btu Of12 13x12x2	1
2	46481	(000000-)	Fitting, Hyd, E90, Jm12/Om12	1
3	62471	(000000-)	Fitting, Hyd, E90, Jm12/Om12, L	1
4	1026319	(000000-003038)	Bracket Wldt, Cooler, Hyd Fluid	1
5	1040318	(000000-003038)	Pad, Tank, Hyd [W/Psa]	4
6	1026647	(000000-xxxxxx)	Angle, Mtg, Stl, .12 1.6 1.6 02.2l	1
7	39283	(000000-xxxxxx)	Screw, Hex, M10 X 1.5 X 25, 8.8	1
8	32492	(000000-xxxxxx)	Washer, Flat, 0.38 Std	1
9	41430	(000000-xxxxxx)	Nut, Hex, Lock, M10 X 1.5, Nl	1
10	51787	(000000-003038)	Bumper, Rbr, 0.6d 0.34t .3d Tip	1
11	1036959	(000000-)	Tube, Hyd, Main Return	1
12	53466	(000000-)	Clamp, Cable, Stl, 1.50d X 1.00w, 1h	1
13	60090	(000000-)	Fitting, Hyd, Cap, Jf08	1
14	1028821	(000000-)	Tube, Hyd, Sqge	1
15	1028822	(000000-)	Tube, Hyd, Sqge	1
16	40678	(000000-)	Clamp, Cable, Stl, 0.44d X 0.62w, 1h	2
17	74455	(000000-)	Screw, Hex, M6 X 1.0 X 12, Fmg	1
18	1028823	(000000-)	Tube, Hyd, Rear Sqge [M20]	2
19	35904	(000000-)	Nut, Ftg, Hyd, 0.56-18	2
20	50161	(000000-)	Fitting, Hyd, Cap, Jf04	2
21	39277	(000000-003038)	Screw, Hex, M8 X 1.25 X 25, 8.8	8
22	32491	(000000-003038)	Washer, Flat, 0.31, Std	8
23	07791	(000000-003038)	Nut, Hex, Flng, M8 X 1.25	8
24	41430	(000000-)	Nut, Hex, Lock, M10 X 1.5, Nl	2
25	39277	(000000-)	Screw, Hex, M8 X 1.25 X 25, 8.8	2
26	32491	(000000-)	Washer, Flat, 0.31, Std	2
27	47752	(000000-)	Fitting, Hyd, Str, Jf06/Jm04	1

Fig. 70 - Hydraulic Reservoir Group

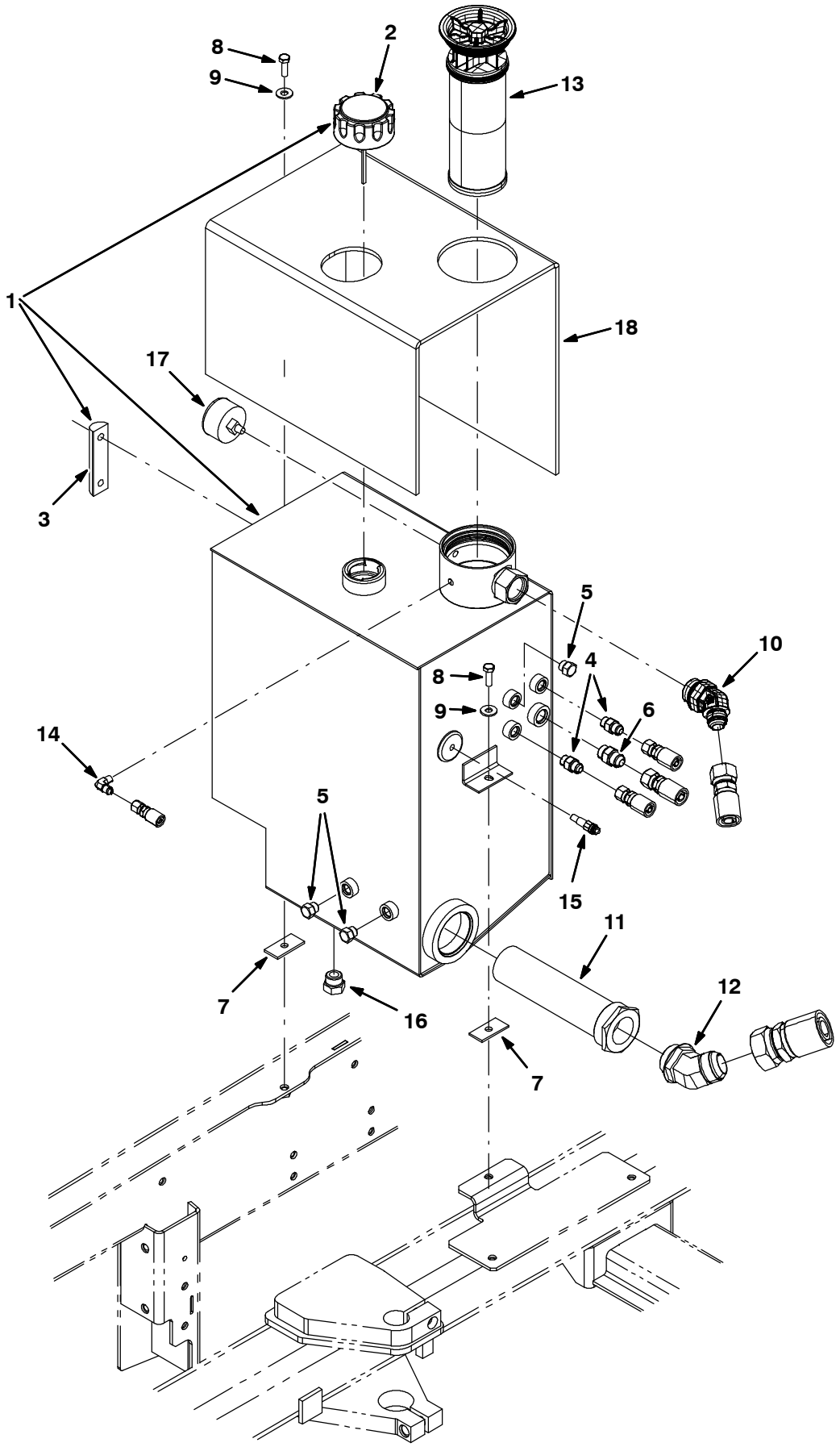

354456

Fig. 70 - Hydraulic Reservoir Group

	Ref.	Part No.	Serial Number	Description	Qty.
▽	1	9002398	(000000-)	Reservoir, Hyd, 10.0Gal, Replmt	1
▲	2	25122	(000000-)	Cap, Breather, Hyd, 2.4 Ds	1
▲	3	65215	(000000-)	Gauge, Sensing, Level	1
	4	56690	(000000-)	Fitting, Hyd, Str, Jm06/Om06	2
	5	46482	(000000-)	Fitting, Hyd, Plug, Om06	3
	6	44869	(000000-)	Fitting, Hyd, Str, Jm08/Om08	1
	7	1040318	(000000-)	Pad, Tank, Hyd [W/Psa]	2
	8	39277	(000000-)	Screw, Hex, M8 X 1.25 X 25, 8.8	2
	9	32491	(000000-)	Washer, Flat, 0.31 Std	2
	10	1023545	(000000-)	Fitting, Hyd, E45, Jm12/Om16	1
	11	31613	(000000-)	Strainer, Hyd, 25gpm 100mesh Psi	1
	12	71726	(000000-)	Fitting, Hyd, E45, Jm20/Om20	1
	13	1021579	(000000-)	Filter Assy [Pt4 936498]	1
	14	55455	(000000-)	Fitting, Hyd, E90, Jm04/Pm02	1
	15	58592	(000000-)	Send-Unit, Water, Temp, 04npt 113oh/195d	1
	16	40362	(000000-)	Fitting, Hyd, Plug, Om10	1
	17	1025132	(000000-)	Indicator, Press, 60psi	1
	18	1034878	(000000-)	Insulation, Thermal, Hydraulic Blanket	1

Fig. 71 - Hydraulic Valves Group (000000-002699)

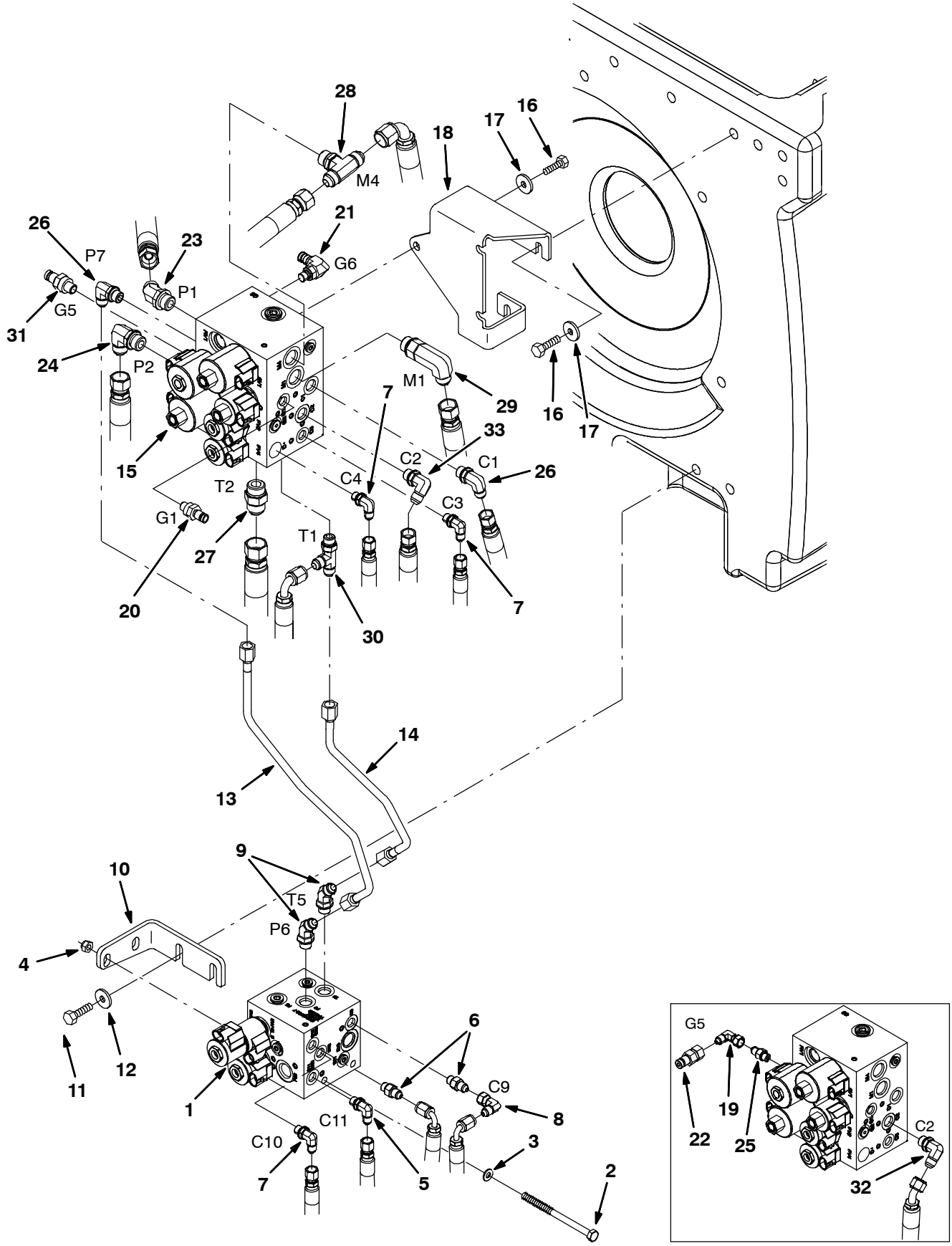

354457

Fig. 71 - Hydraulic Valves Group (000000-002699)

Ref.	Part No.	Serial Number	Description	Qty.
1	1018936	(000000-002699)	Valve, Cntrl, Hyd [M20] (See Breakdowns)	1
2	49883	(000000-002699)	Screw, Hex, M8 X 1.25 X 120, 8.8, Fl	2
3	32491	(000000-002699)	Washer, Flat, 0.31, Std	2
4	08709	(000000-002699)	Nut, Hex, Lock, M8 X 1.25, Nl	2
5	77097	(000000-002699)	Fitting, Hyd, E90, Jm04/Om04	2
6	55586	(000000-002699)	Fitting, Hyd, Str, Jm04/Om04	2
7	77097	(000000-002699)	Fitting, Hyd, E90, Jm04/Om04	2
8	39210	(000000-002699)	Fitting, Hyd, E90, Jf04/Jm04	1
9	47522	(000000-002699)	Fitting, Hyd, E45, Jm06/Om06	2
10	1020708	(000000-002699)	Bracket, Mtg, Valve, Hyd, Swp	1
11	09740	(000000-002699)	Screw, Hex, M8 X 1.25 X 20, Ss	2
12	1017218	(000000-002699)	Washer, Flat, 0.32b 1.00d .12, Ss	2
13	1022482	(000000-002699)	Tube, Hyd, Swp	1
14	1022484	(000000-002699)	Tube, Hyd, Swp	1
15	1020394	(000000-002699)	Valve, Cntrl, Hyd (See Breakdowns)	1
16	09740	(000000-002699)	Screw, Hex, M8 X 1.25 X 20, Ss	6
17	1017218	(000000-002699)	Washer, Flat, 0.32b 1.00d .12, Ss	6
18	1021991	(000000-002699)	Bracket, Mtg, Valve, Hyd, Scb	1
19	39210	(000000-001271)	Fitting, Hyd, E90, Jf04/Jm04	1
20	395973	(000000-002699)	Fitting, Hyd, Str, Om04/Qm04	1
21	395974	(000000-002699)	Fitting, Hyd, E90, Om04/Qm04	1
22	396476	(000000-001271)	Fitting, Hyd, Str, Jf04/Qm04	1
23	42226	(000000-002699)	Fitting, Hyd, E45, Jm08/Om08	1
24	44868	(000000-002699)	Fitting, Hyd, E90, Jm08/Om08	1
25	55586	(000000-001271)	Fitting, Hyd, Str, Jm04/Om04	1
26	56820	(000000-002699)	Fitting, Hyd, E90, Jm06/Om06	2
27	46480	(000000-002699)	Fitting, Hyd, Str, Jm10/Om10	1
28	49933	(000000-002699)	Fitting, Hyd, Tee, Jm08/Jm08/Om08, Br	1
29	69173	(000000-002699)	Fitting, Hyd, E90, Jm08/Om08, L	1
30	76316	(000000-002699)	Fitting, Hyd, Tee, Jm06/Jm06/Om06, Run	1
31	395973	(001272-026999)	Fitting, Hyd, Str, Om04/Qm04	1
32	56820	(000000-001337)	Fitting, Hyd, E90, Jm06/Om06	1
33	71727	(001338-026999)	Fitting, Hyd, E90, Jm06/Om06, L	1

Fig. 72 - Hydraulic Valve Group (002700-)

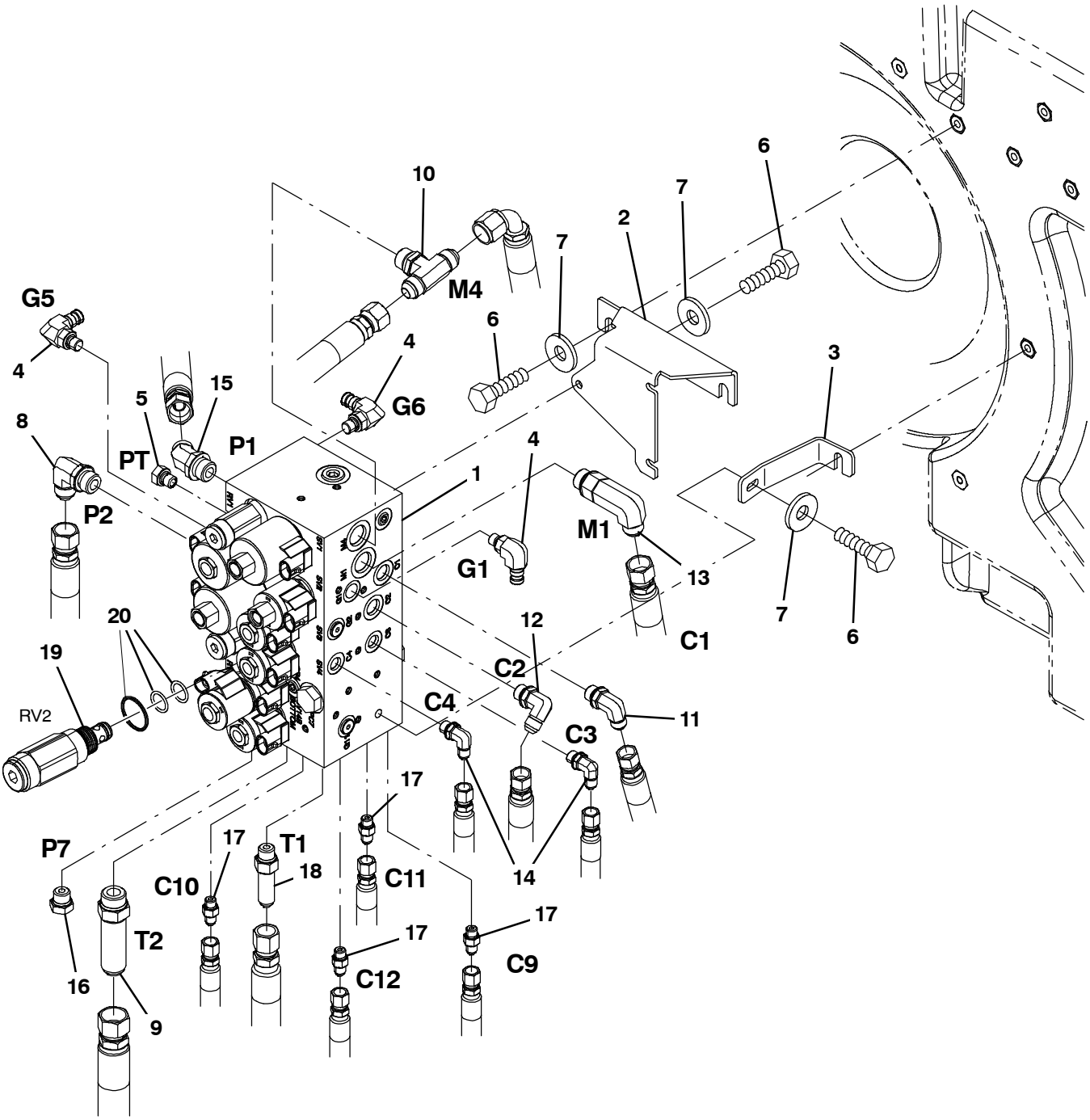

354816

Fig. 72 - Hydraulic Valve Group (002700-)

Ref.	Part No.	Serial Number	Description	Qty.
1	1038566	(002700-)	Valve, Hyd, Solenoid, 12vdc (See Breakdowns)	1
2	1039789	(002700-)	Bracket, Mtg, Valve [Combined]	1
3	1040117	(002700-)	Bracket, Mtg, Valve, Lower	1
4	395974	(002700-)	Fitting, Hyd, E90, Om04/Qm04	3
5	33812	(002700-)	Fitting, Hyd, Plug, Om04	1
6	09740	(002700-)	Screw, Hex, M8 X 1.25 X 20, Ss	8
7	1017218	(002700-)	Washer, Flat, 0.32b 1.00d .12, Ss	8
8	69173	(002700-)	Fitting, Hyd, E90, Jm08/Om08, Long	1
9	1040876	(002700-)	Fitting, Hyd, Str, Jm10/Om10, Long	1
10	49933	(002700-)	Fitting, Hyd, Tee, Jm08/Jm08/Om08, Br	1
11	56820	(002700-)	Fitting, Hyd, E90, Jm06/Om06	1
12	71727	(002700-)	Fitting, Hyd, E90, Jm06/Om06, Long	1
13	69173	(002700-)	Fitting, Hyd, E90, Jm08/Om08, Long	1
14	77097	(002700-)	Fitting, Hyd, E90, Jm04/Om04	2
15	42226	(002700-)	Fitting, Hyd, E45, Jm08/Om08	1
16	46482	(002700-)	Fitting, Hyd, Plug, Om06	1
17	55586	(002700-)	Fitting, Hyd, Str, Jm04/Om04	4
18	59577	(002700-)	Fitting, Hyd, Str, Jm06/Om06, Long	1
19	1044367	(002700-)	Valve, Relief, 0600Psi	1
20	373647	(002700-)	Seal Kit, Cartridge	1

Fig. 73 - Electrical Schematic (000000-001999)

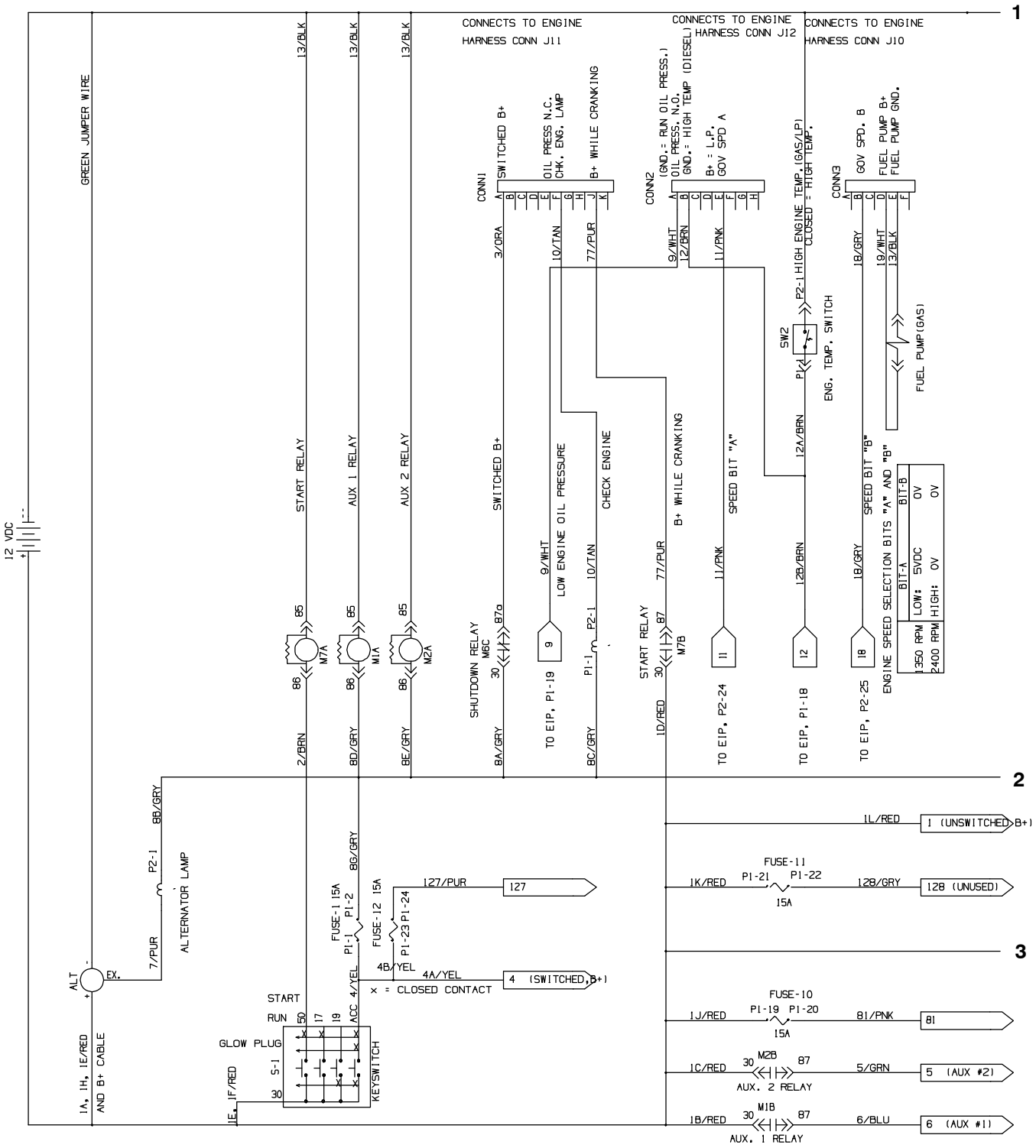

1018547 - 354458

Home Find... Go To..

Fig. 73 - Electrical Schematic (000000-001999)

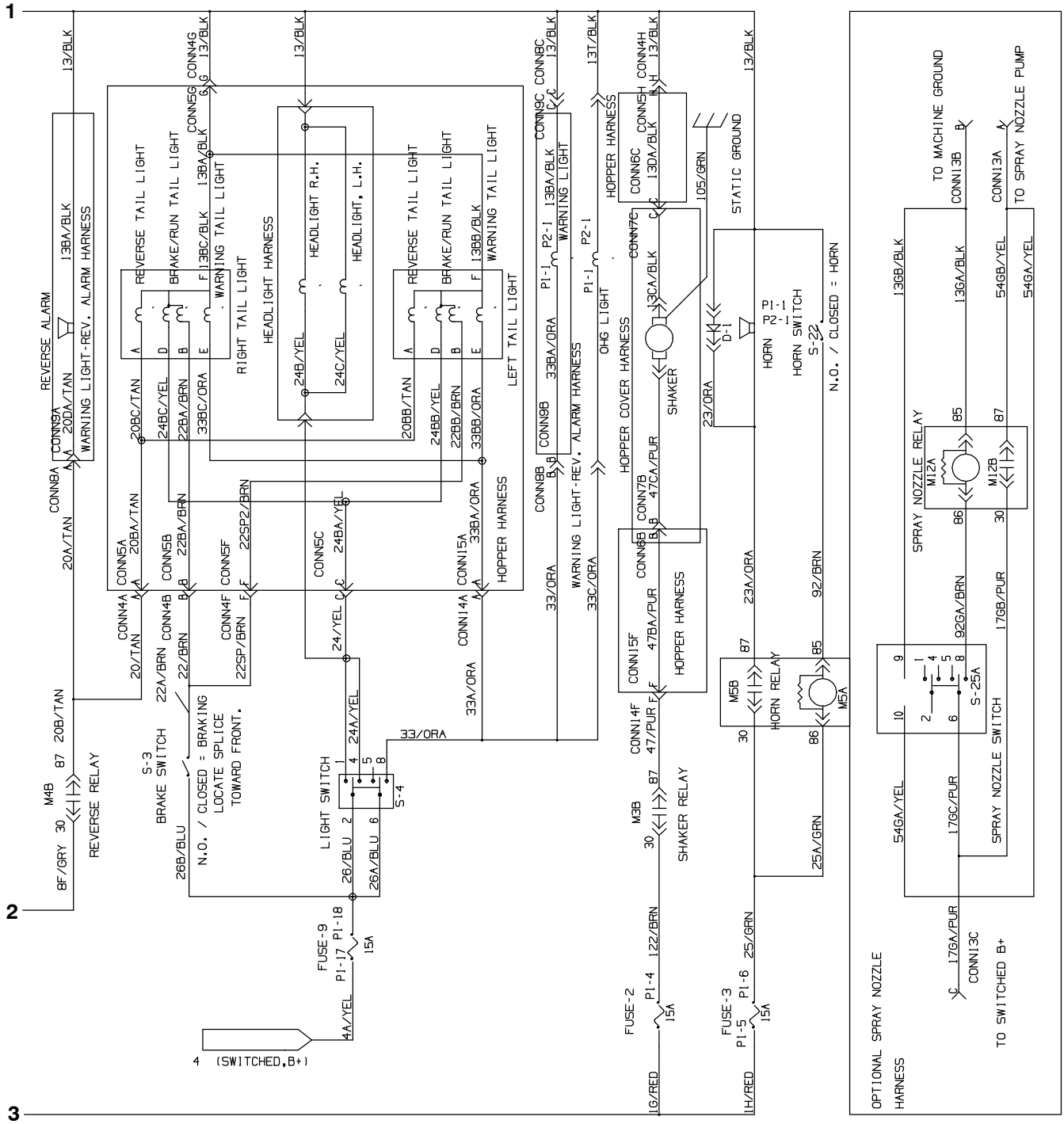

1018547

Home Find... Go To..

Fig. 73 - Electrical Schematic (000000-001999)

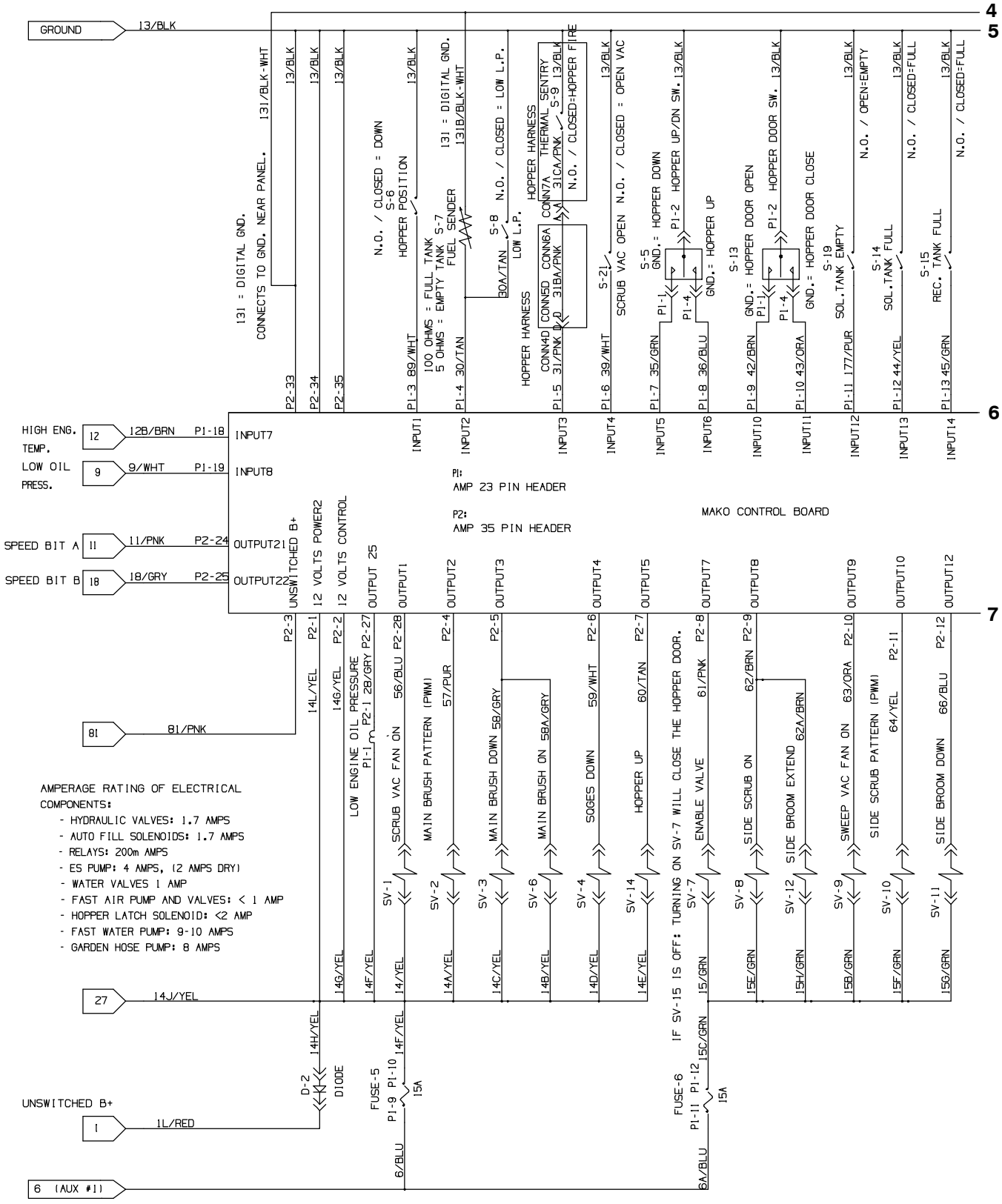

1018547

Home Find... Go To..

Fig. 73 - Electrical Schematic (000000-001999)

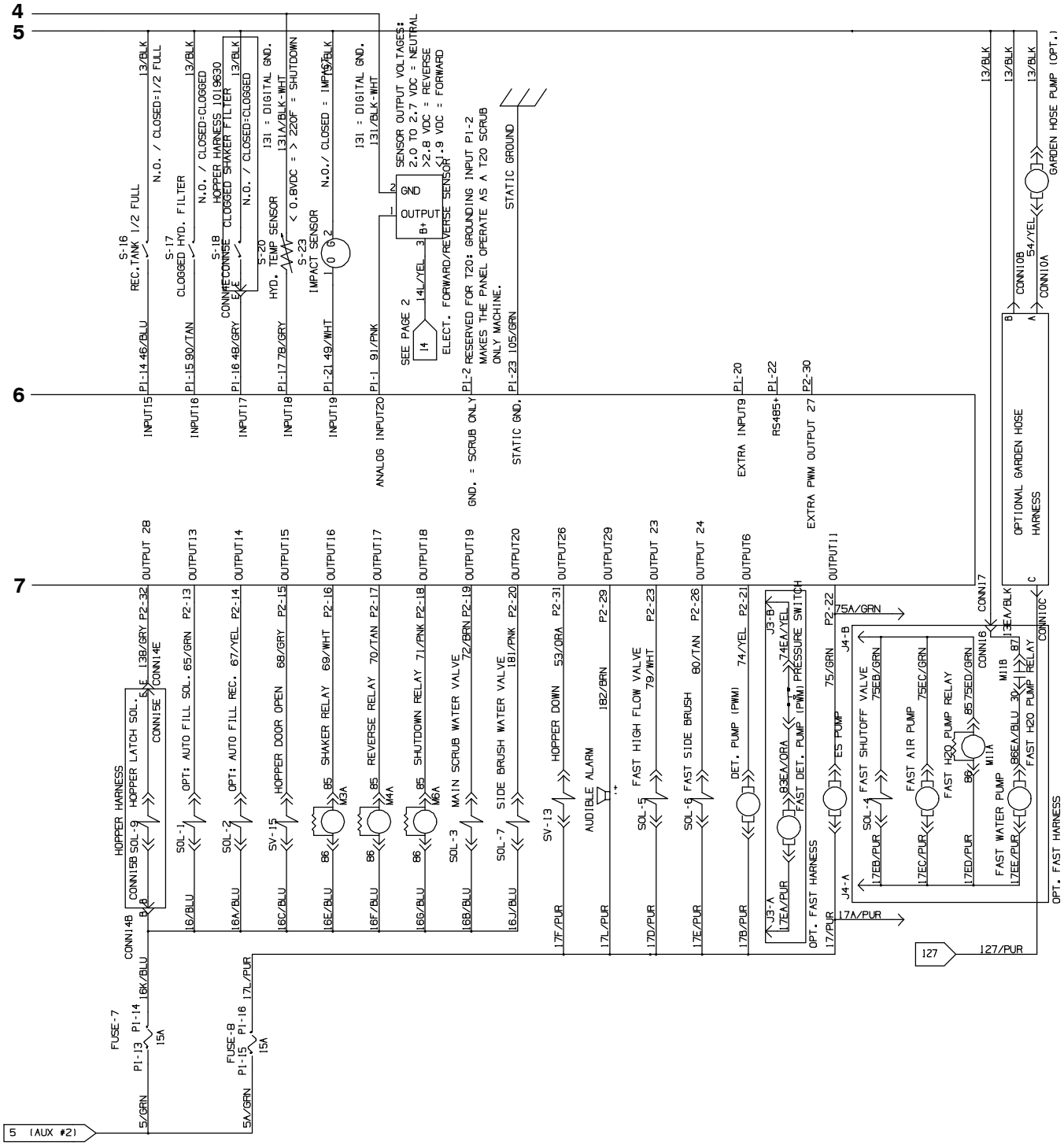

1018547

Home Find... Go To..

Fig. 74 - Electrical Schematic (002000-002532)

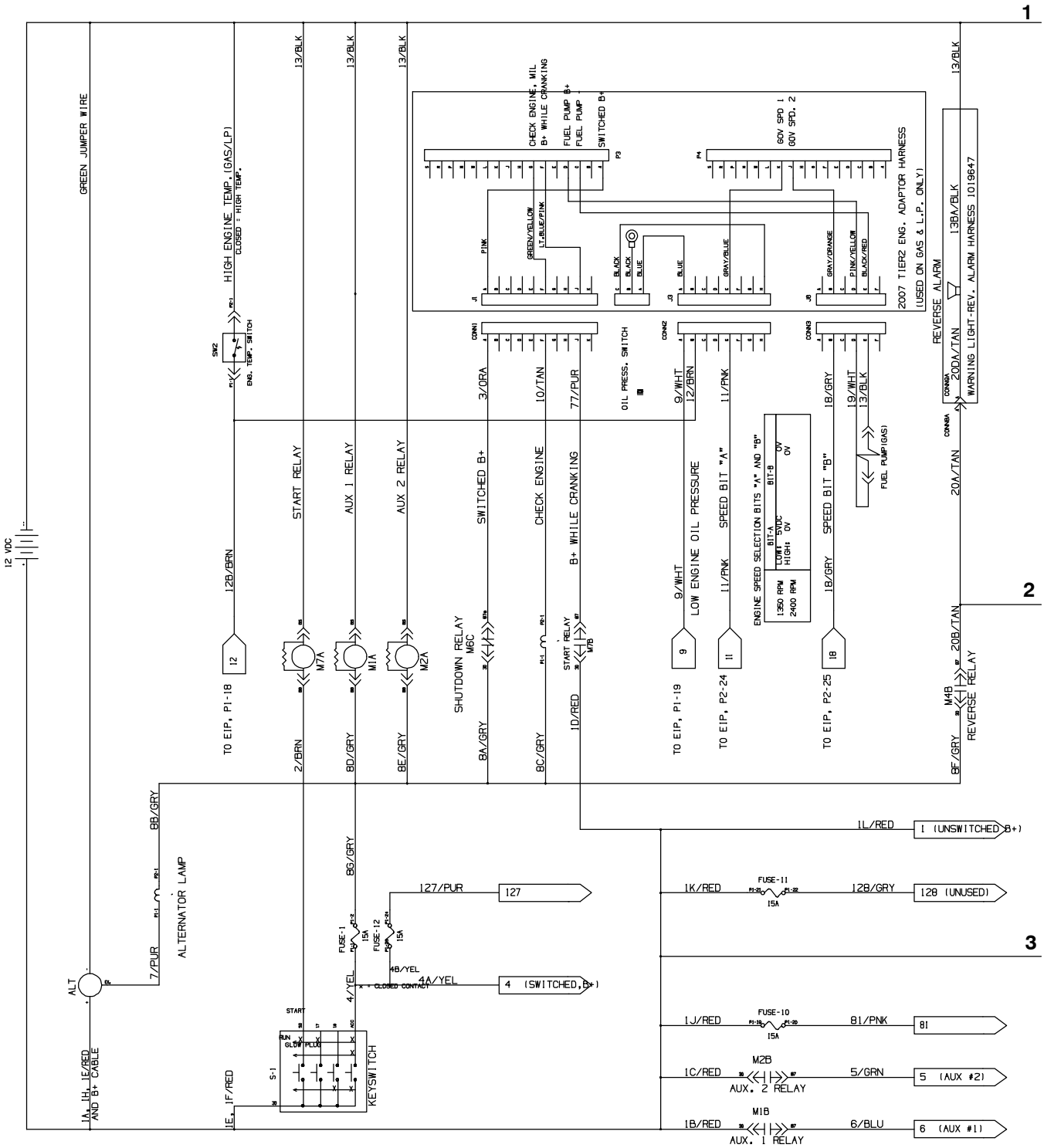

1018547 - 354458

Fig. 74 - Electrical Schematic (002000-002532)

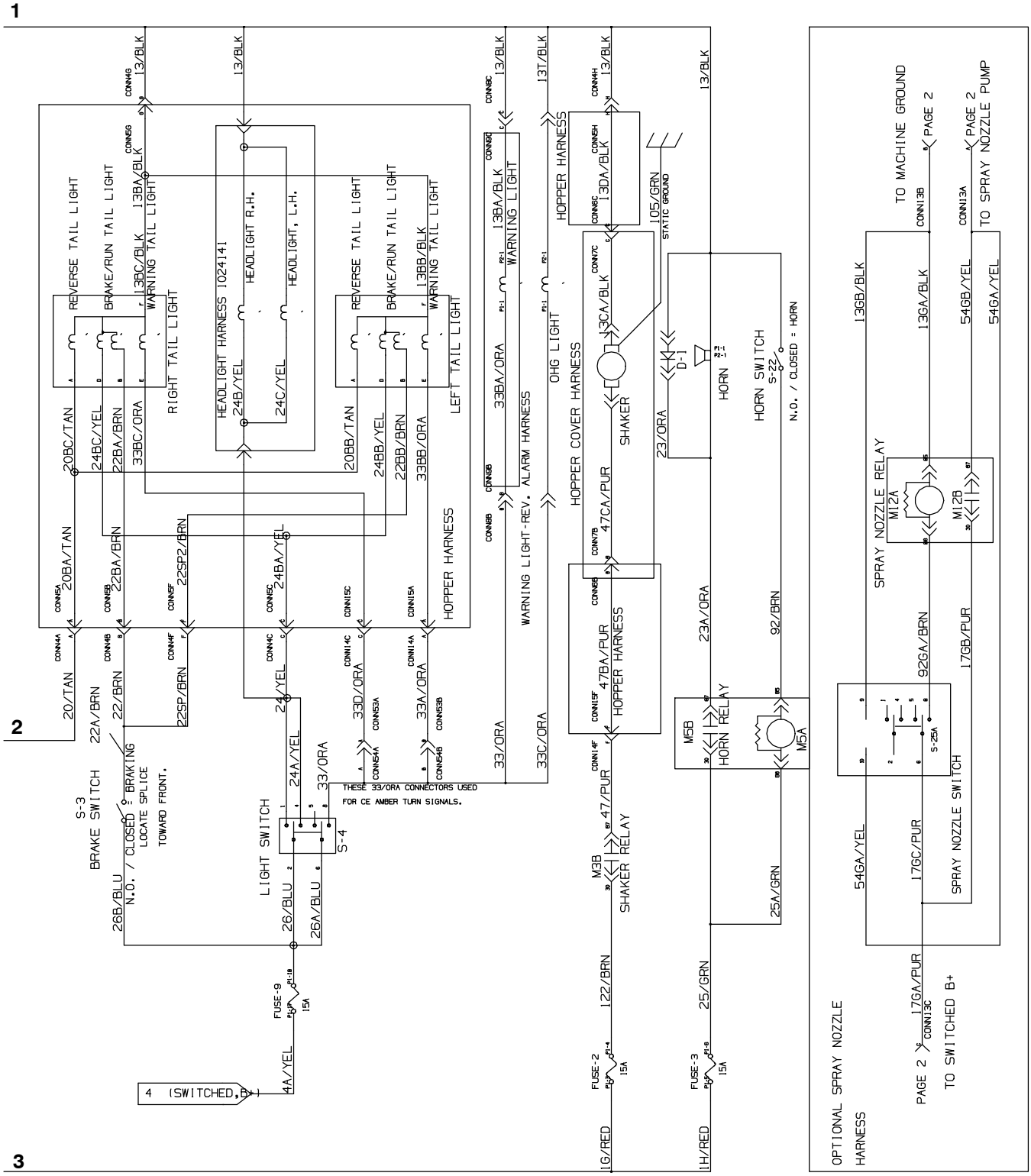

1018547

Home Find... Go To..

Fig. 74 - Electrical Schematic (002000-002532)

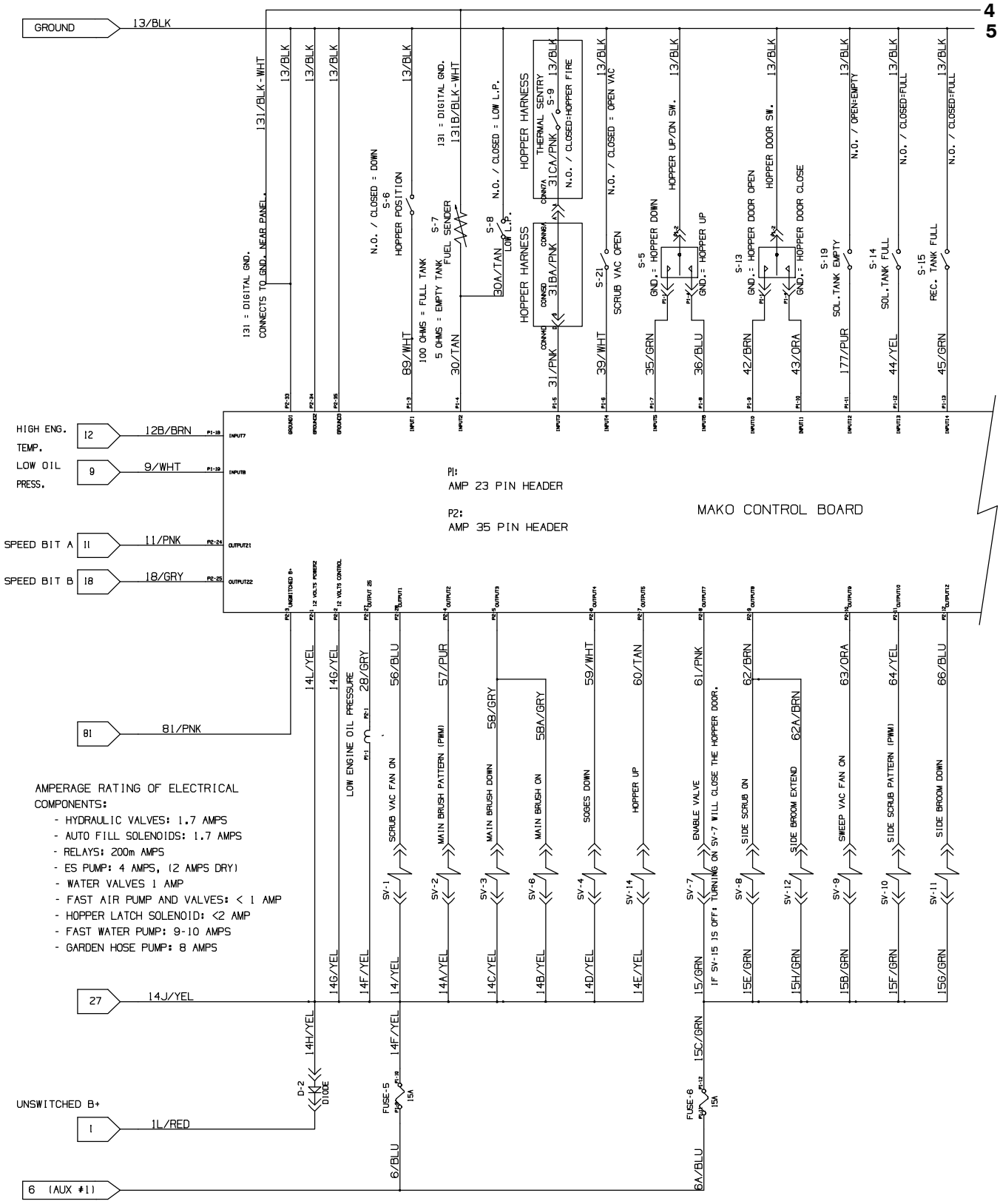

1018547

Home Find... Go To..

Fig. 74 - Electrical Schematic (002000-002532)

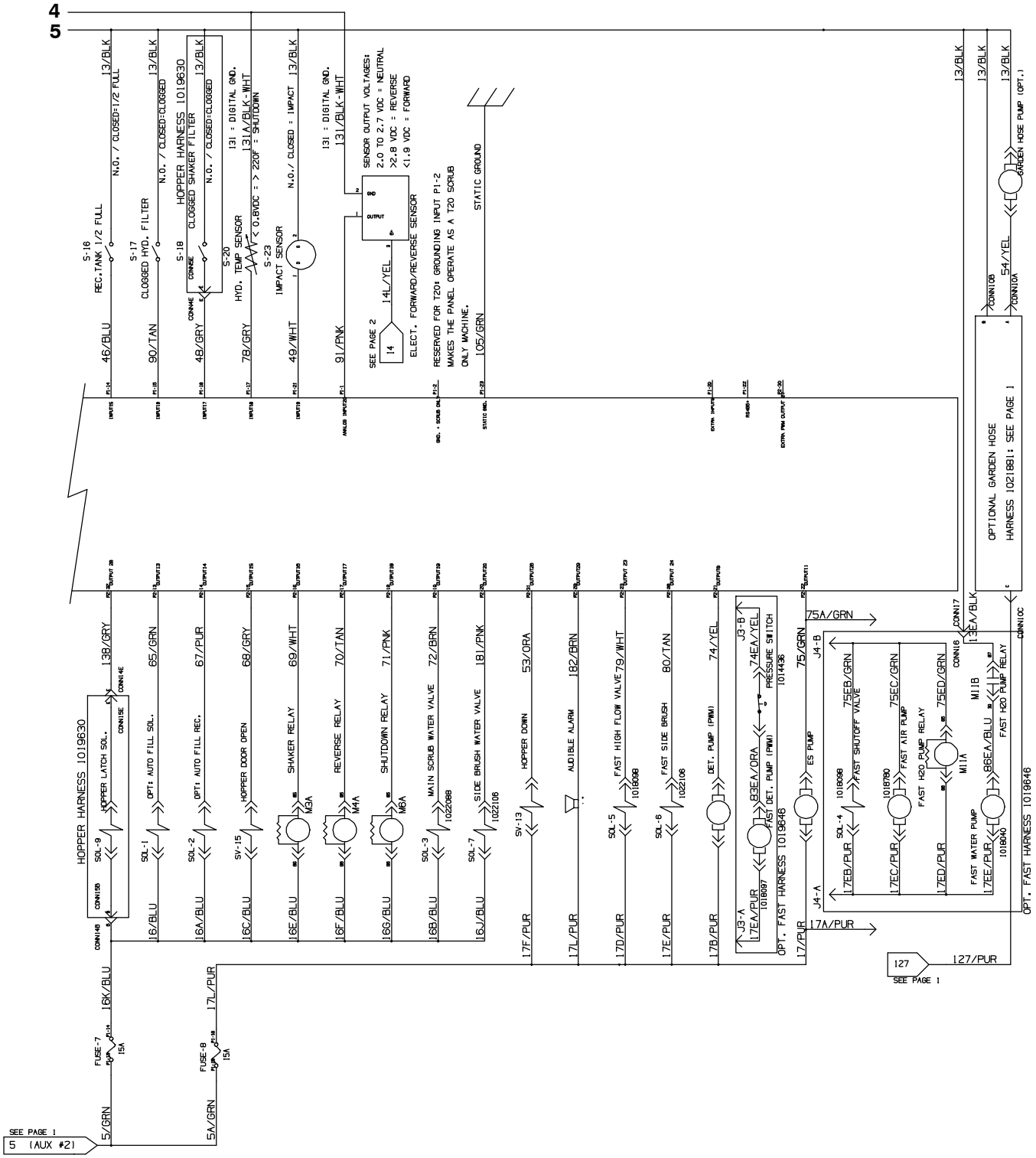

1018547

Home Find... Go To..

Fig. 75 - Electrical Schematic (002533-)

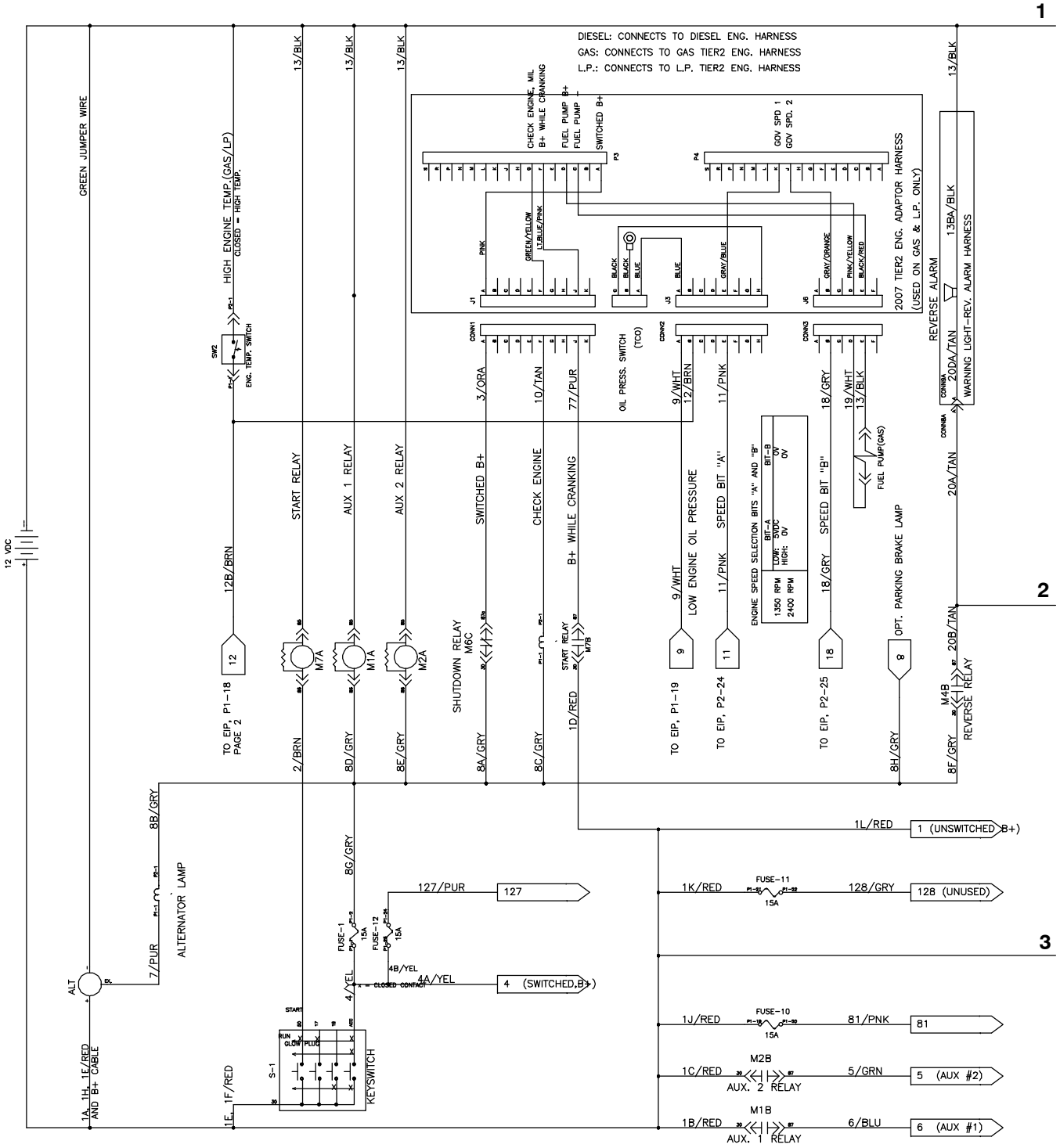

Fig. 75 - Electrical Schematic (002533-)

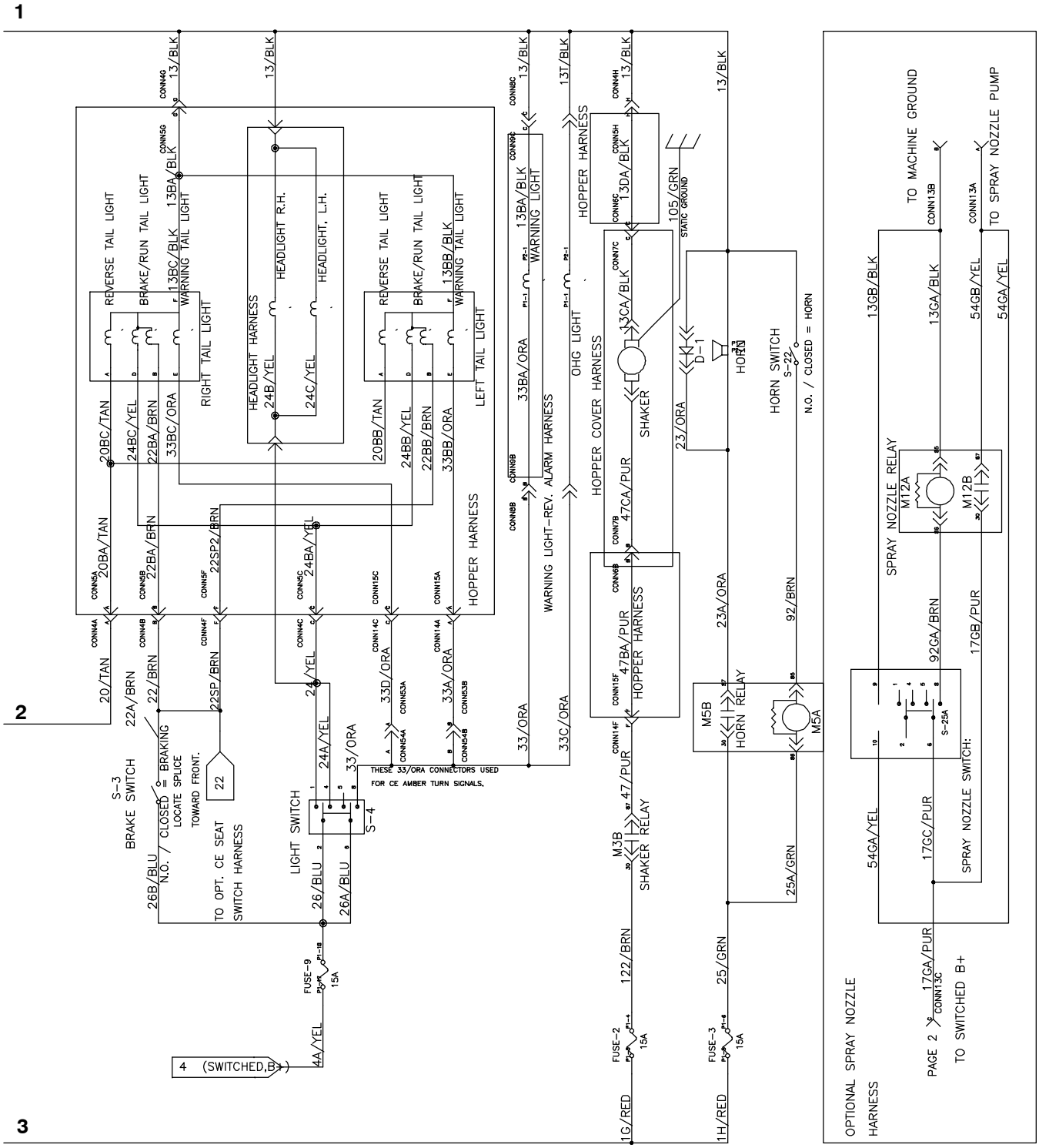

1018547 - 354458

Home Find... Go To..

Fig. 75 - Electrical Schematic (002533-)

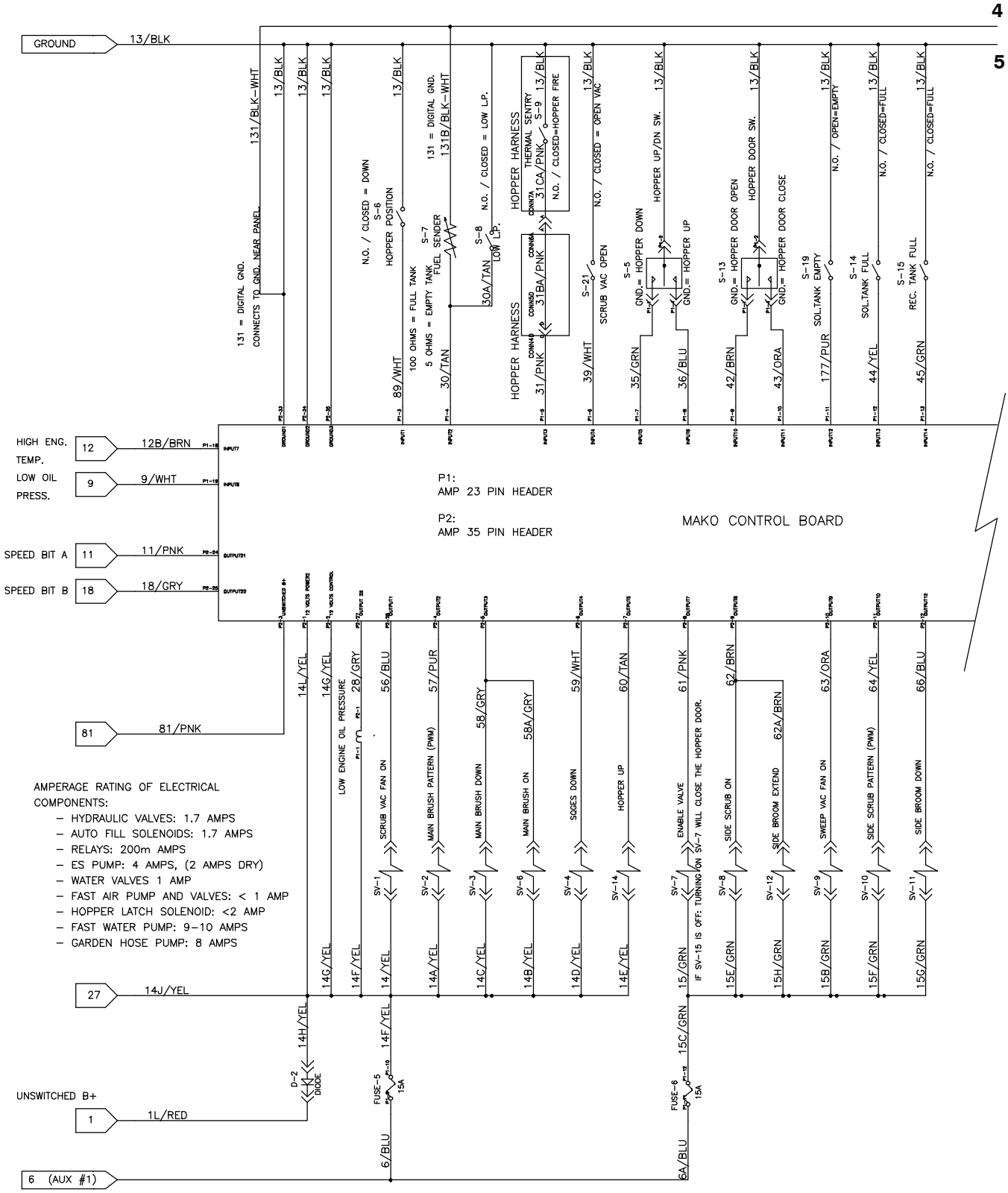

1018547 - 354458

Fig. 75 - Electrical Schematic (002533-)

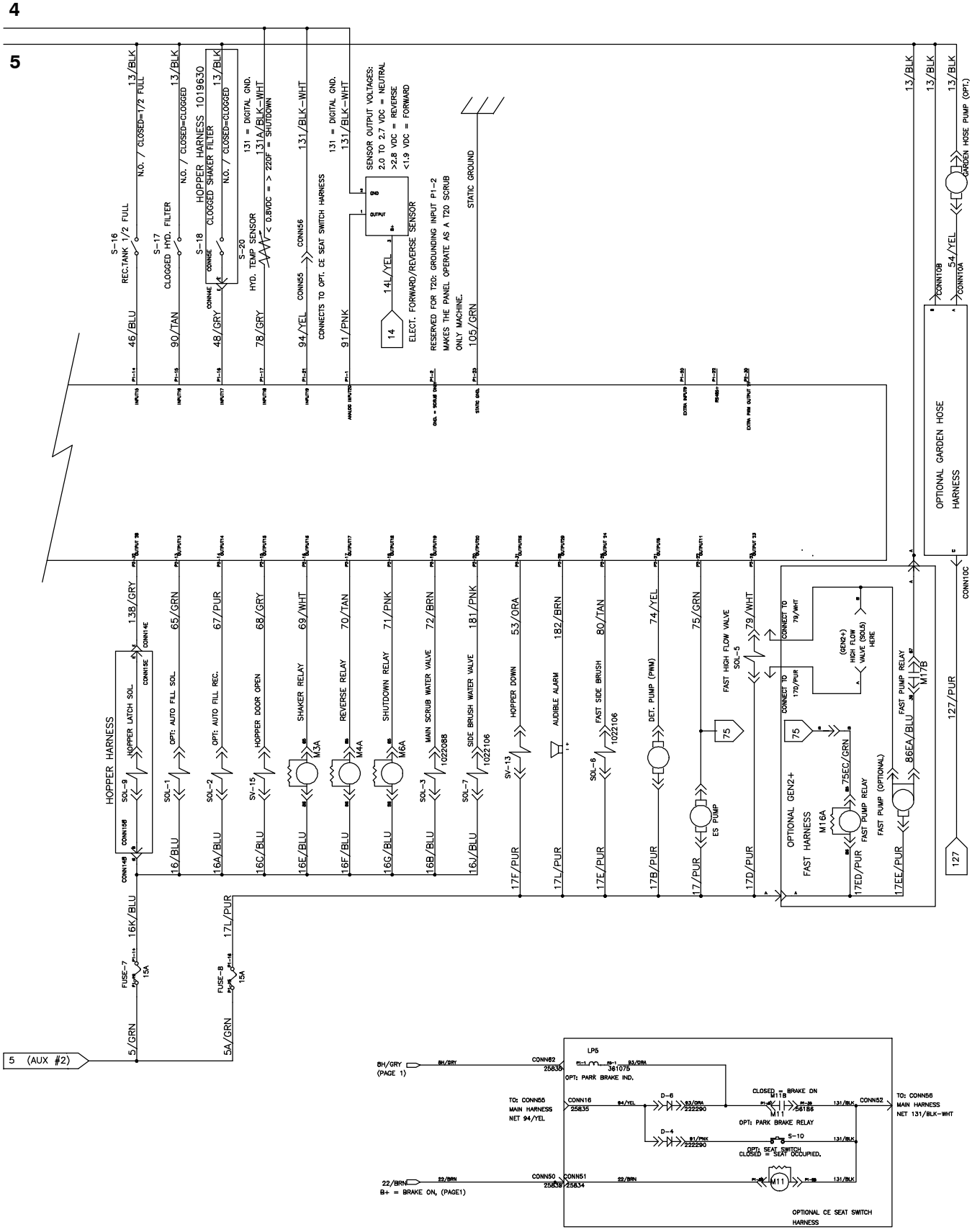

1018547 - 354458

Home Find... Go To..

Fig. 75 - Electrical Schematic (002533-)

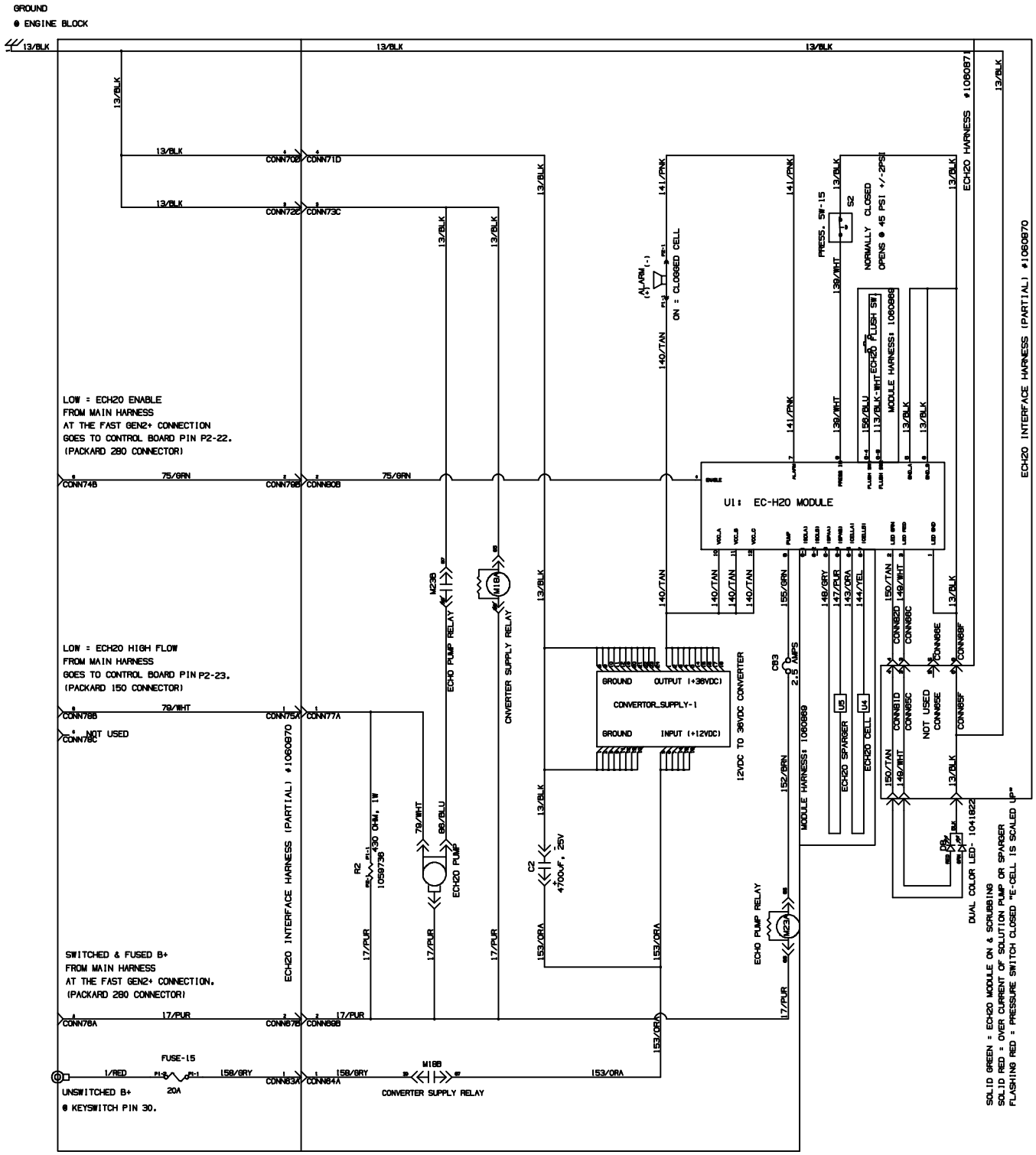

EC-H2O OPTION

1018547 - 354458

Home Find... Go To..

Fig. 76 - Electrical Schematic, Gas/LPG Engine Harness (000000-001999)

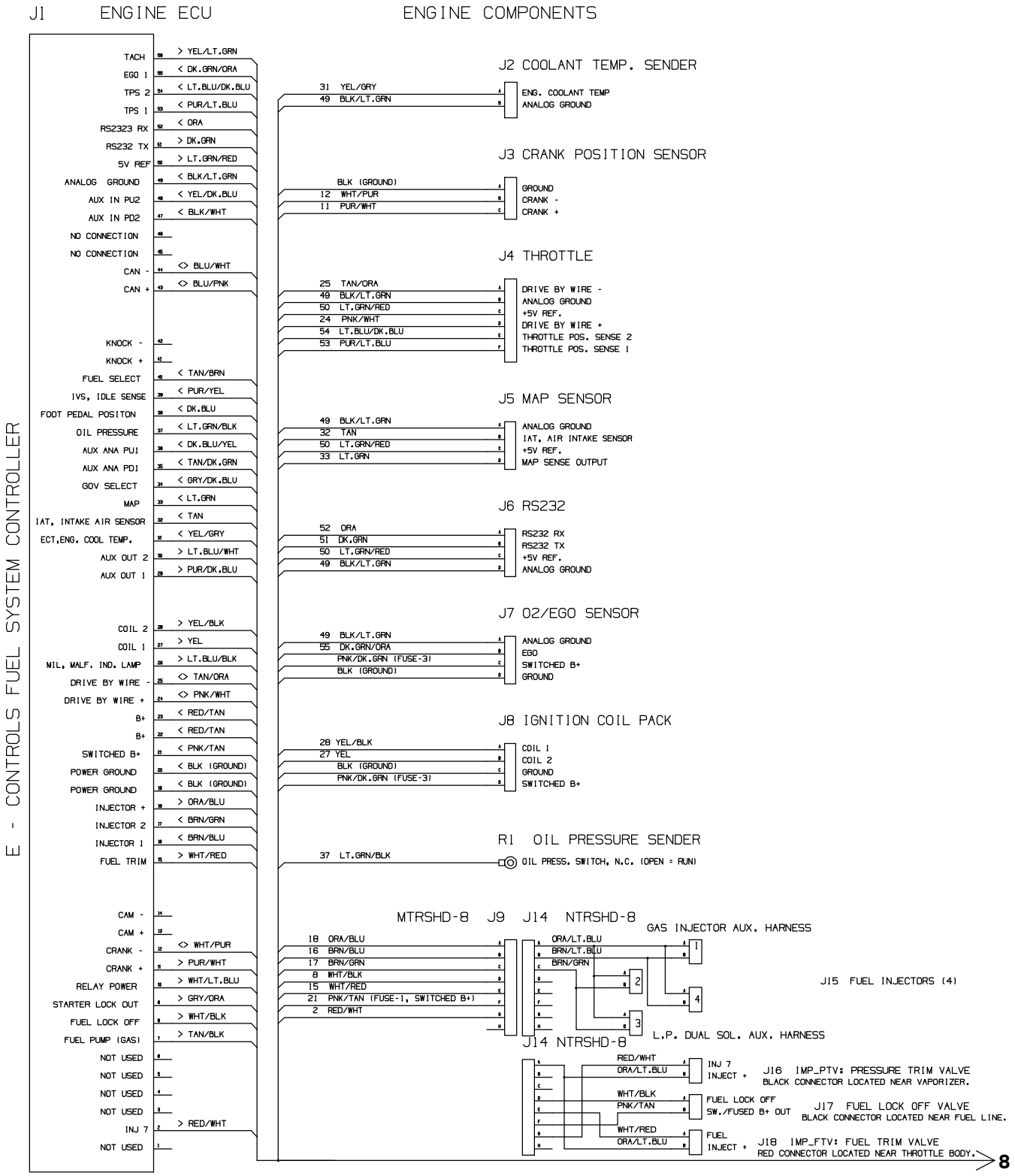

Fig. 76 - Electrical Schematic, Gas/LPG Engine Harness (000000-001999)

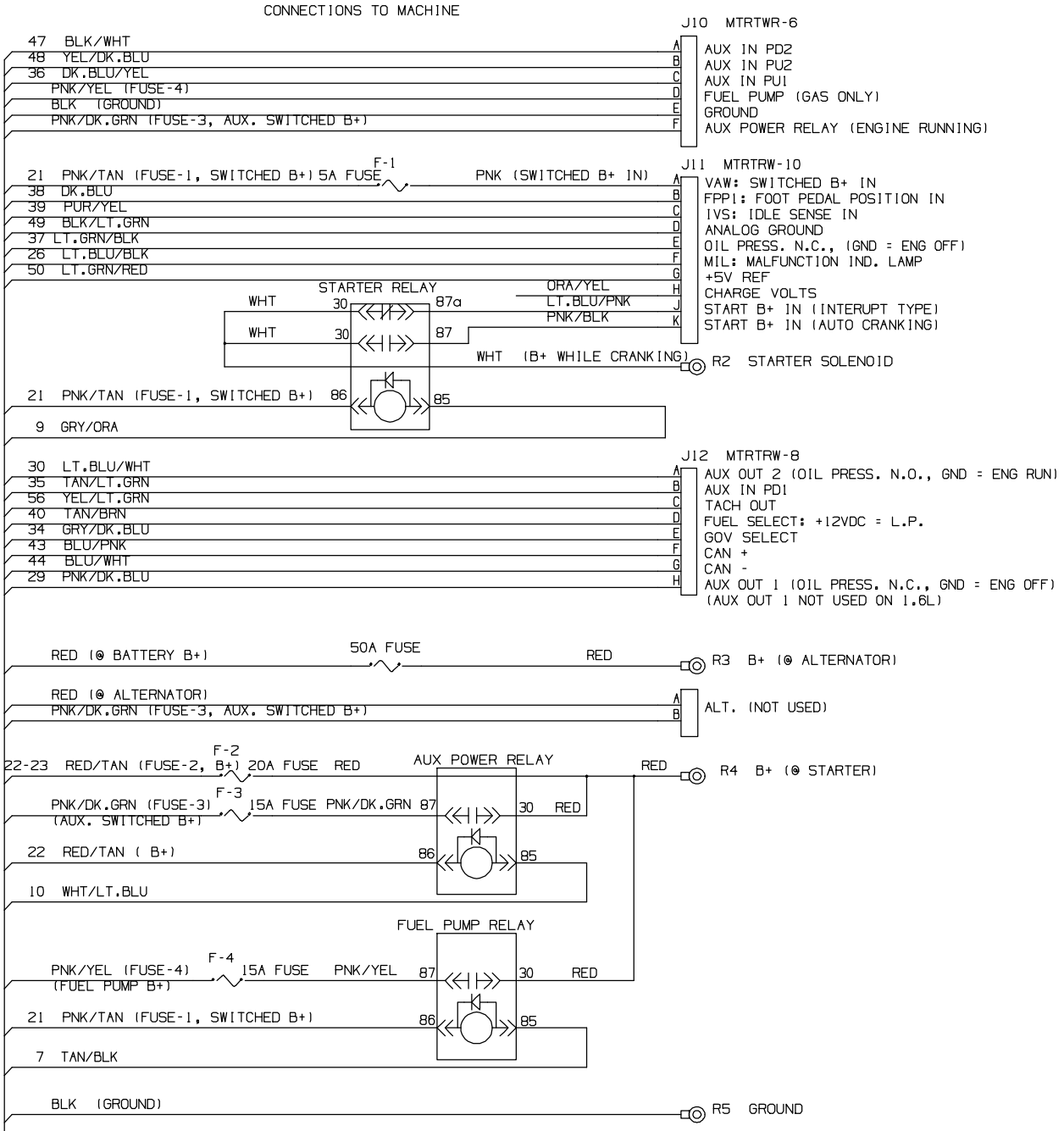

8

1018547

Home Find... Go To..

Fig. 77 - Electrical Schematic, Gas Engine Harness (002000-003122)

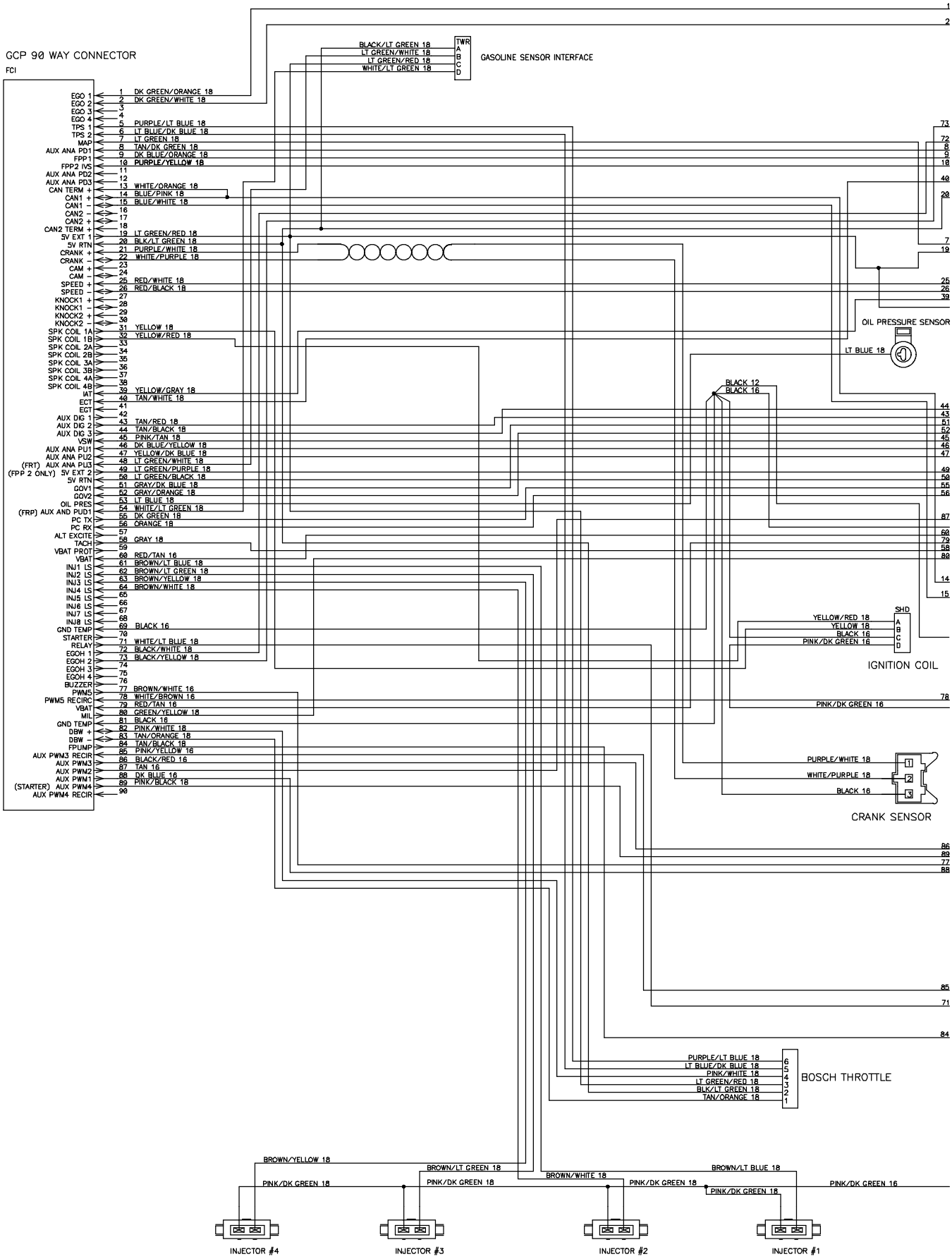

384997 - 354495

Fig. 77 - Electrical Schematic, Gas Engine Harness (002000-003122)

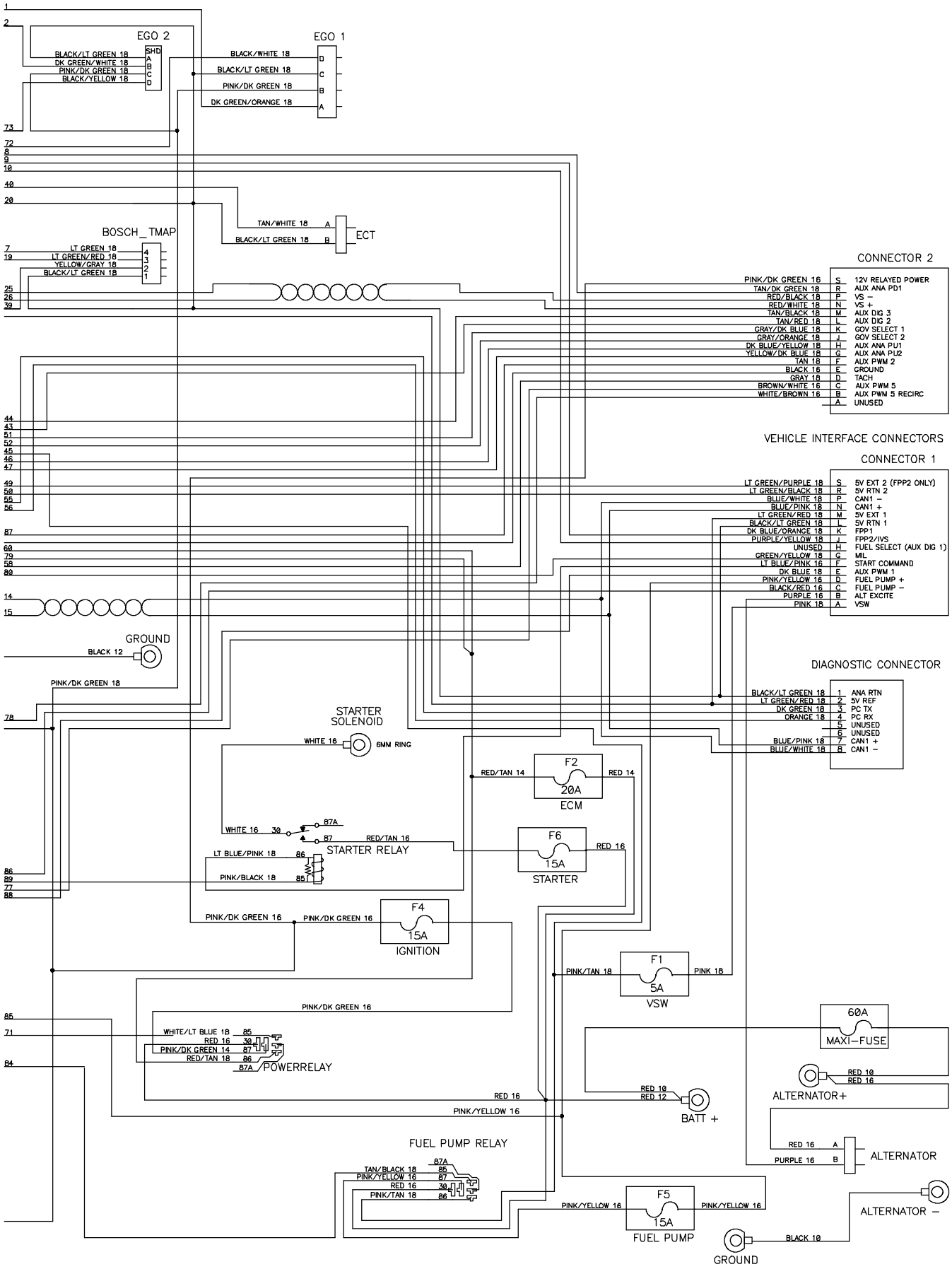

Home Find... Go To..

Fig. 78 - Electrical Schematic, Gas Engine Harness (003123-)

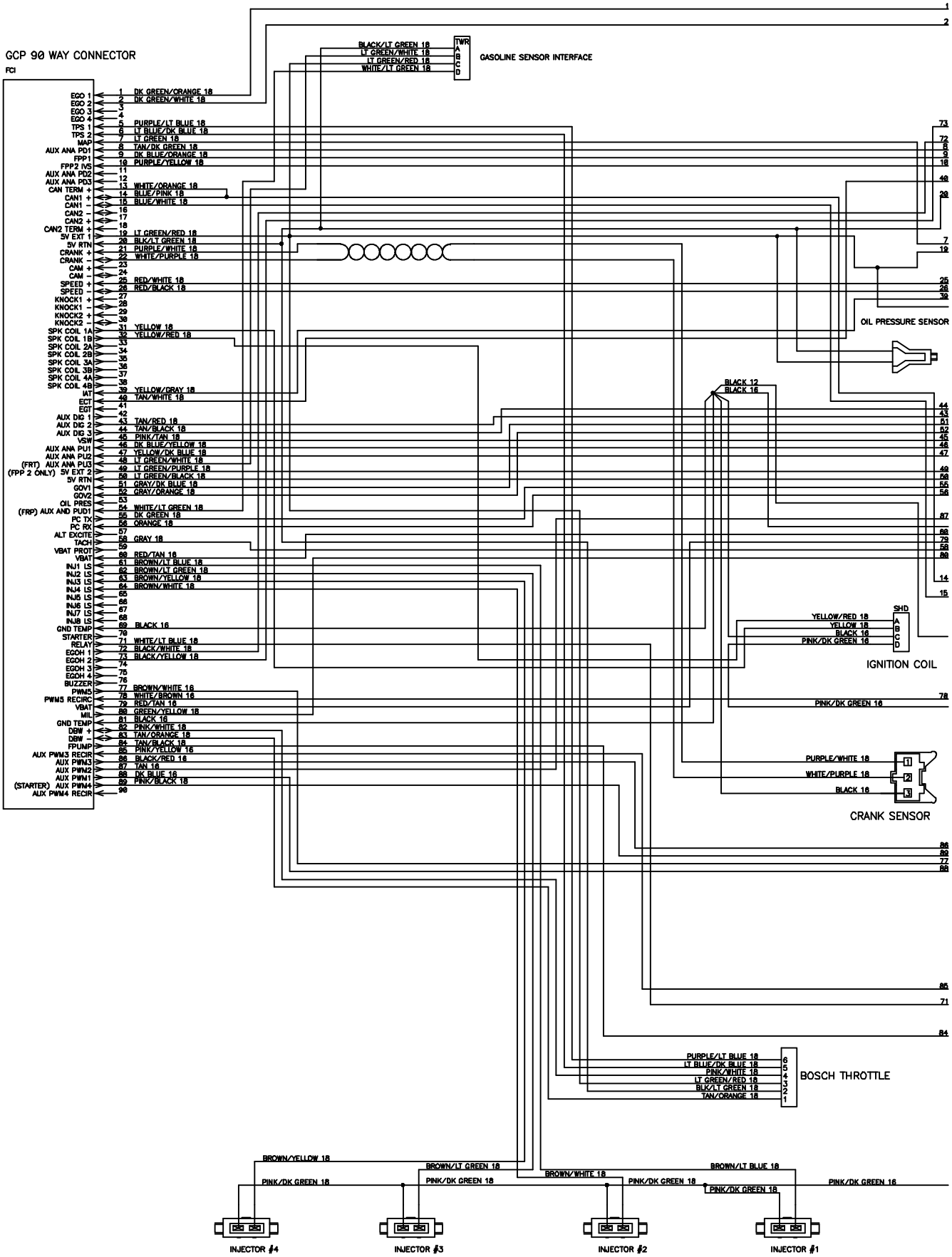

384997 - 354495

Fig. 78 - Electrical Schematic, Gas Engine Harness (003123-)

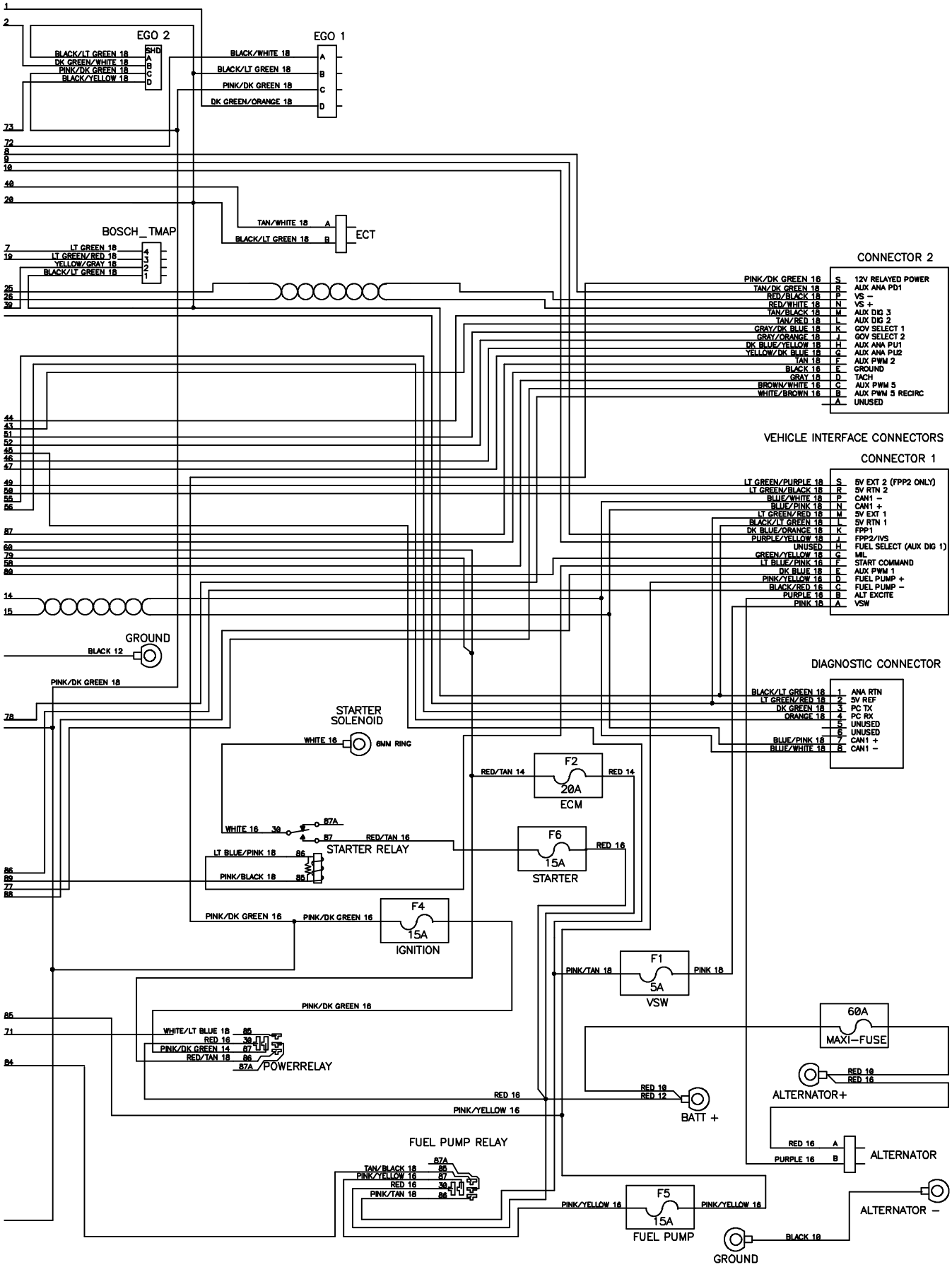

Fig. 79 - Electrical Schematic, LPG Engine Harness (002000-003122)

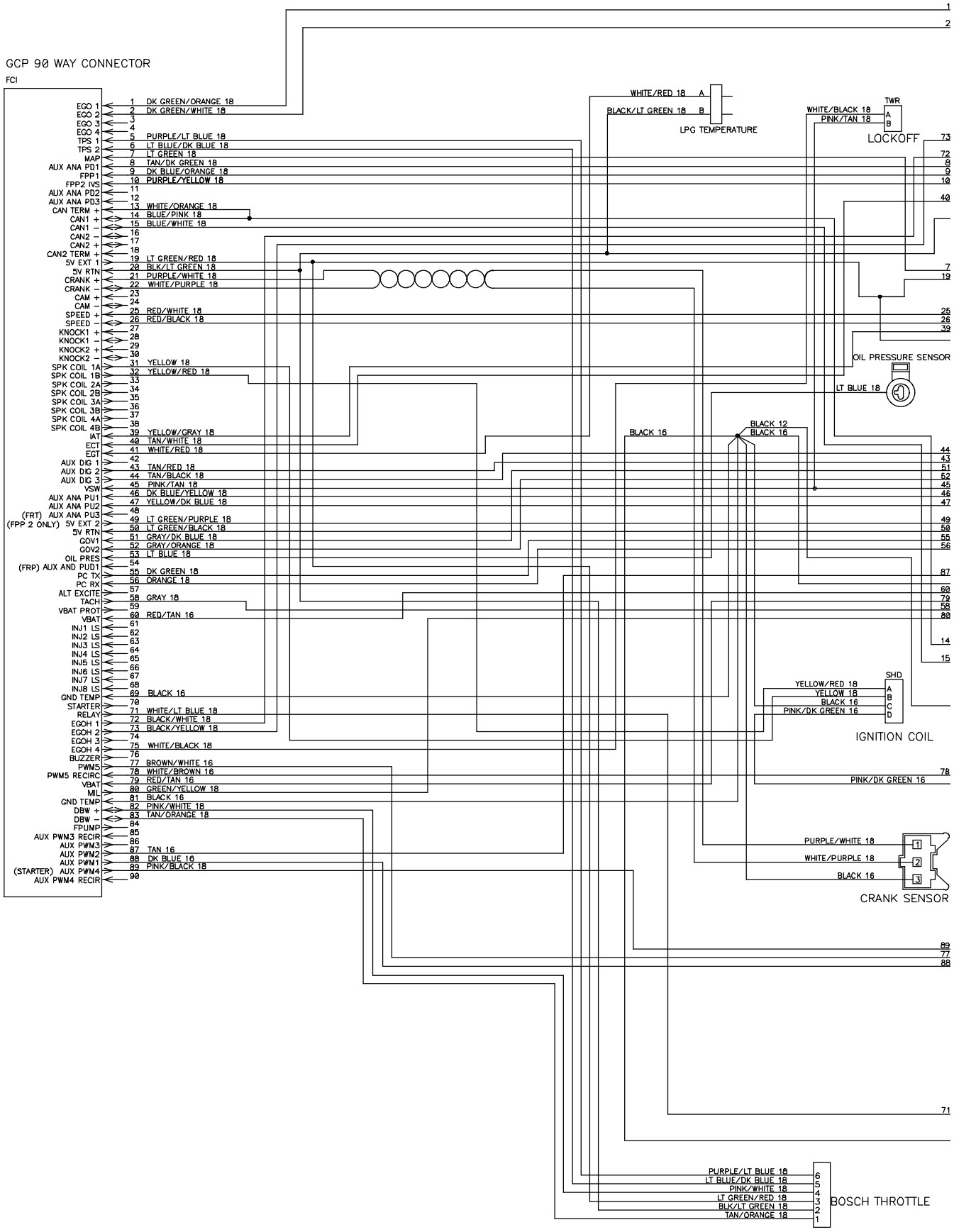

384990 - 354497

Fig. 79 - Electrical Schematic, LPG Engine Harness (002000-003122)

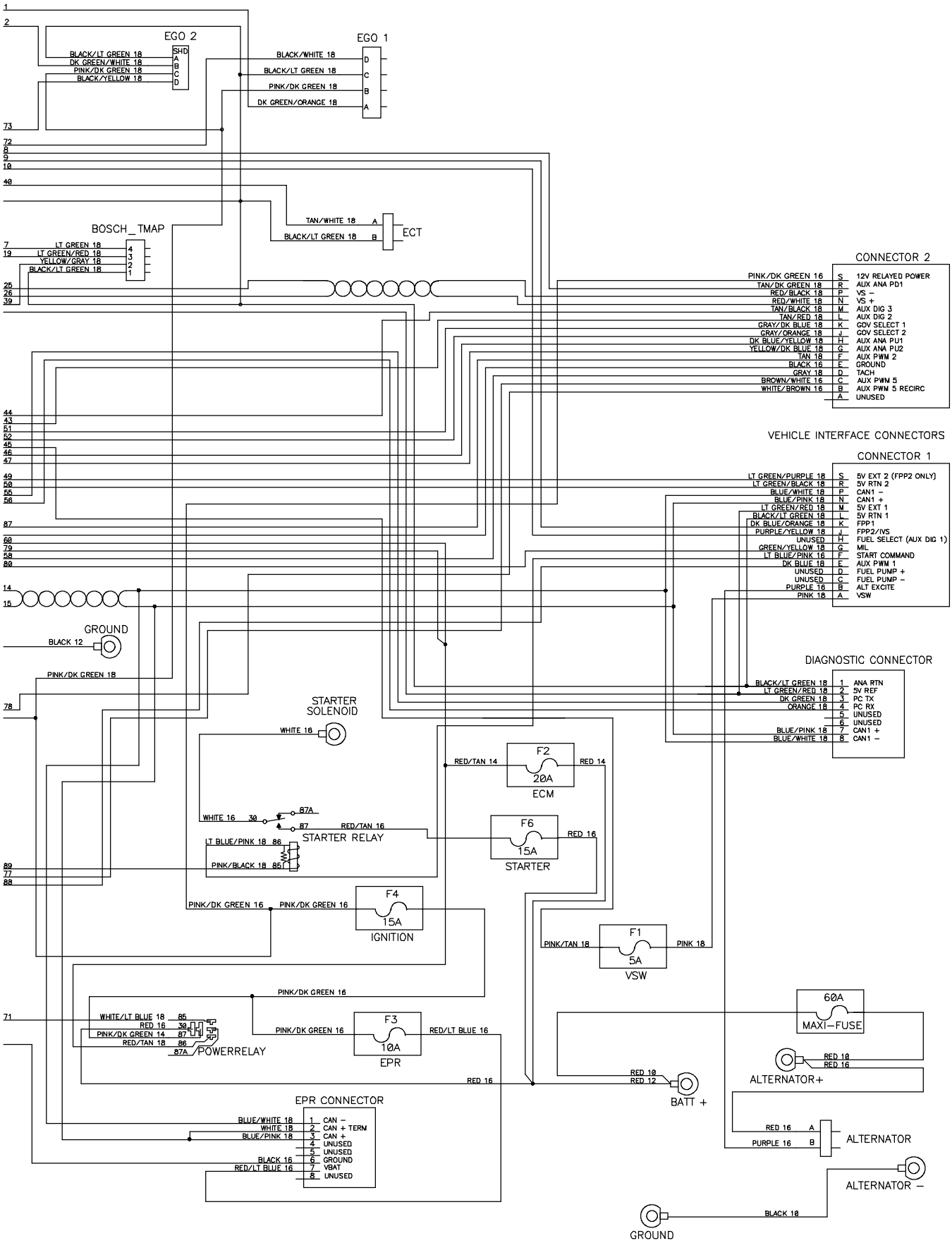

384990 - 354498

Home Find... Go To..

Fig. 80 - Electrical Schematic, LPG Engine Harness (003123-)

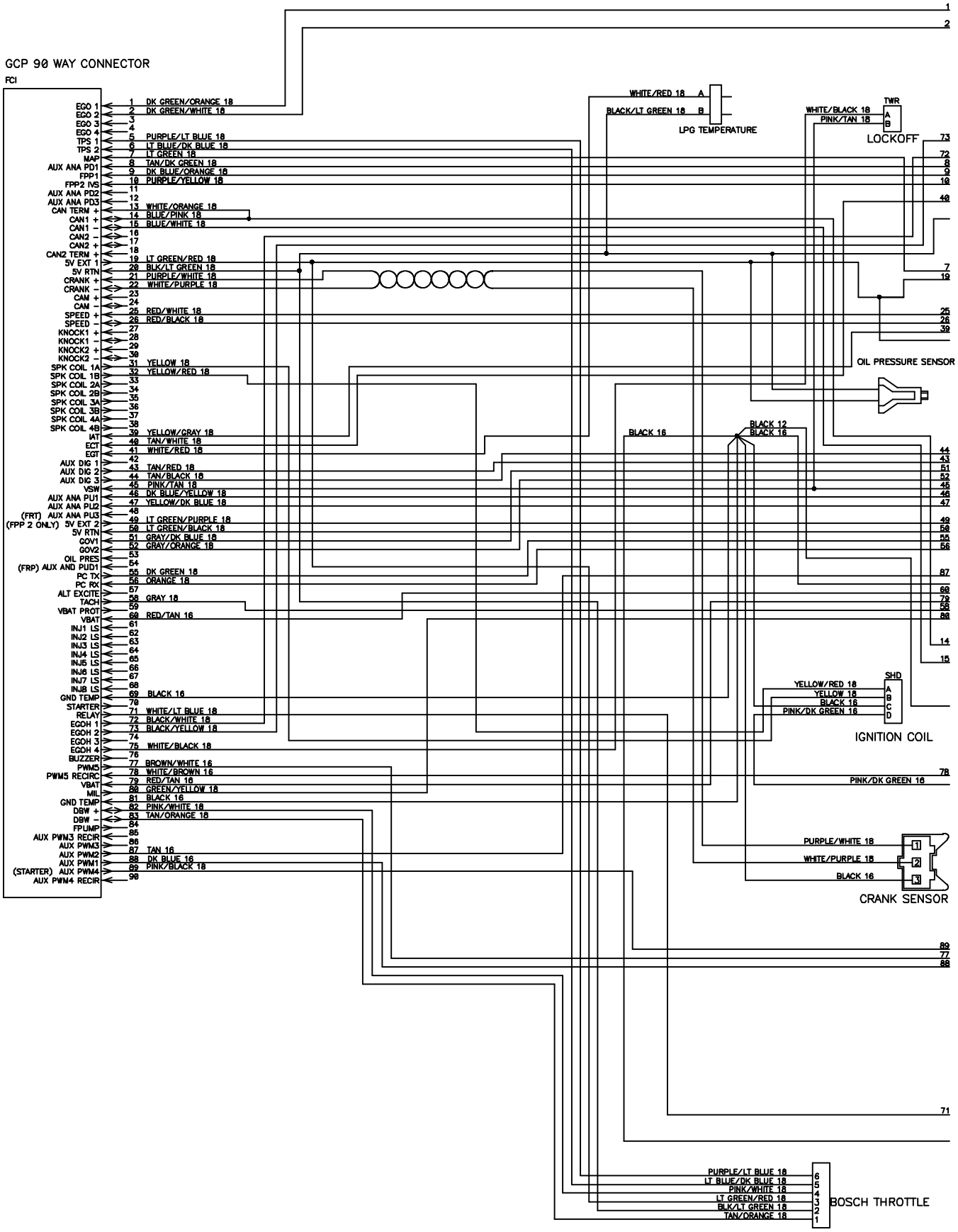

384990 - 354497

Home Find... Go To..

Fig. 80 - Electrical Schematic, LPG Engine Harness (003123-)

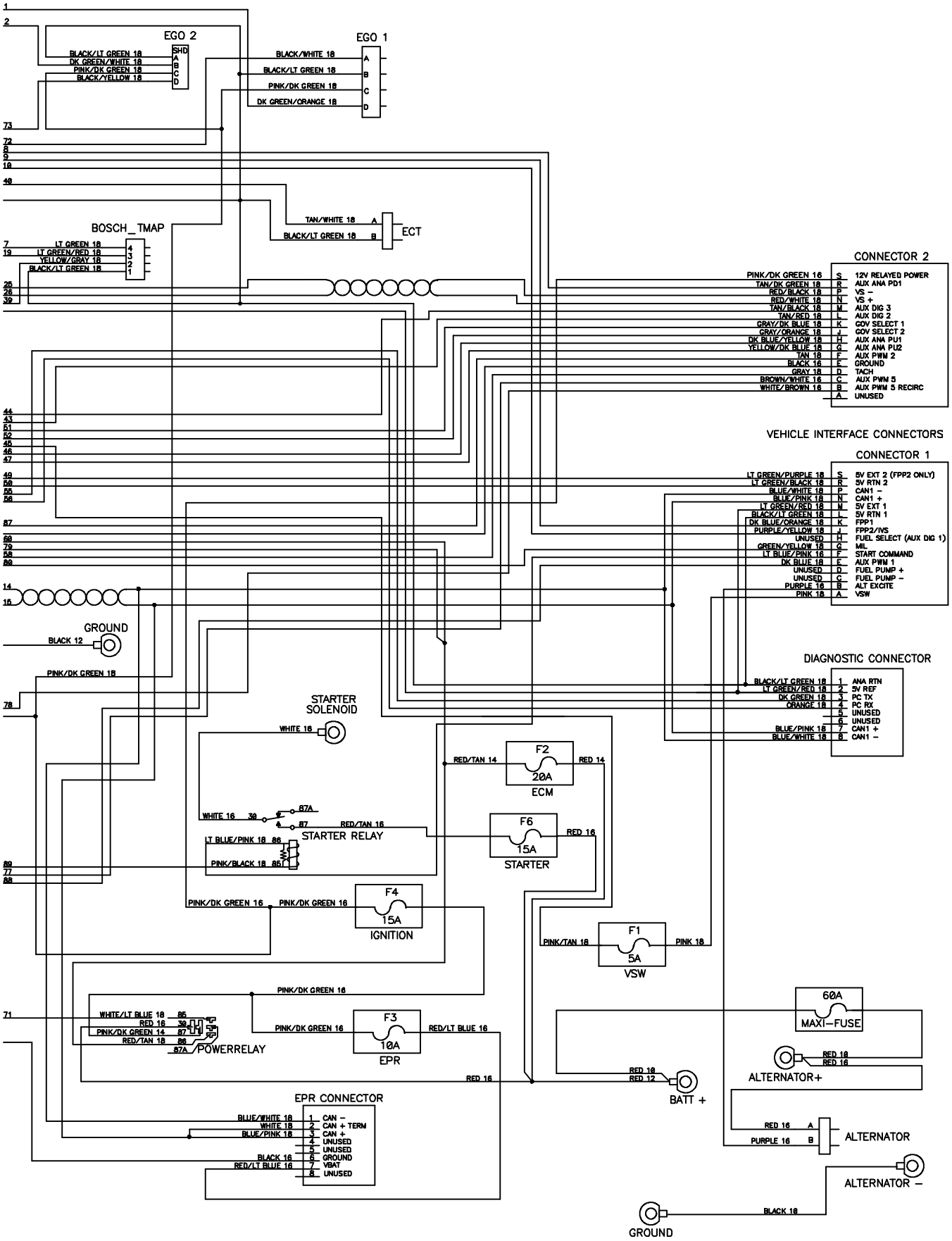

384990 - 354498

Home Find... Go To..

Fig. 81 - Electrical Wire Harnesses Group

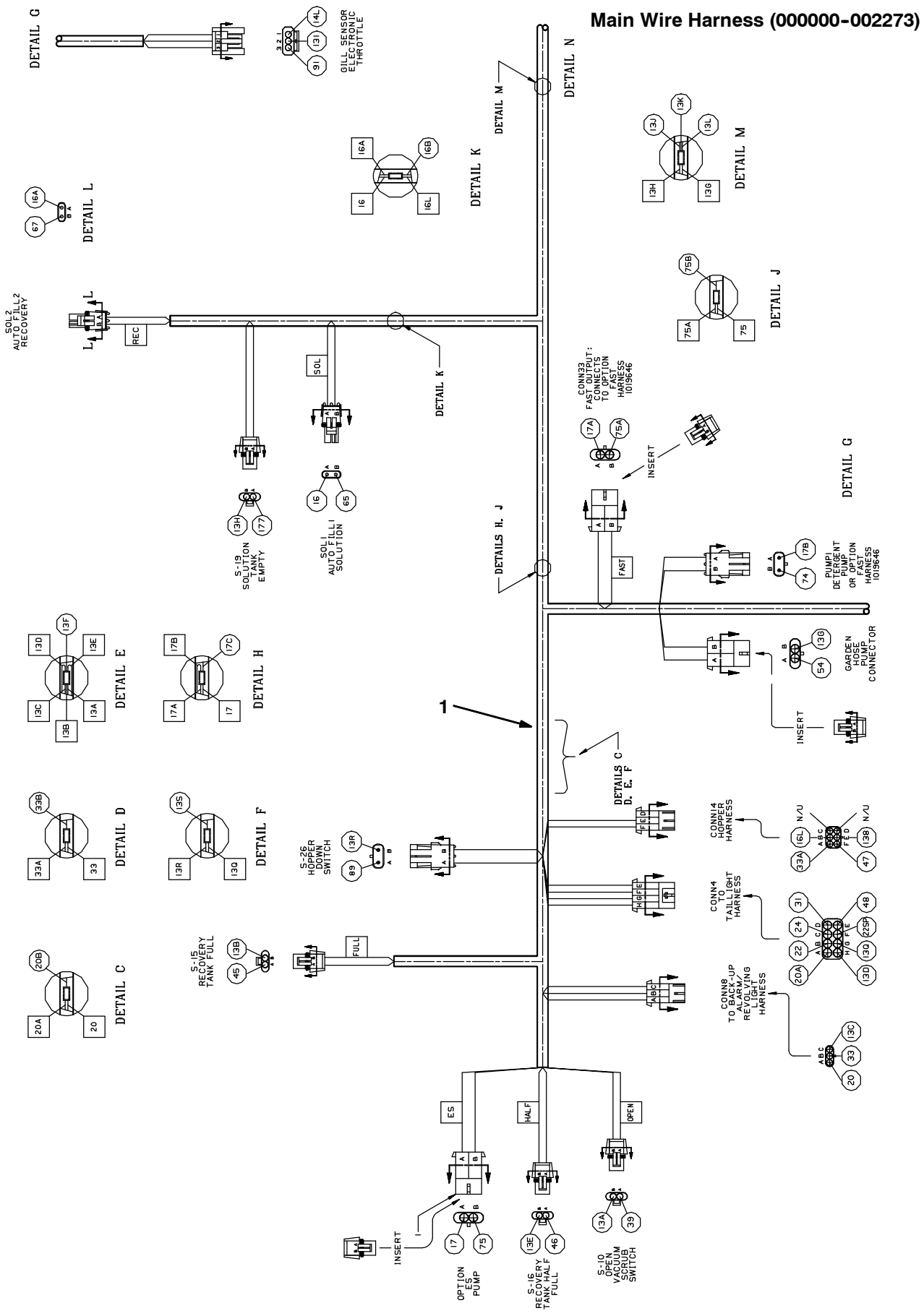

Fig. 81 - Electrical Wire Harnesses Group

Main Wire Harness (000000-002273)

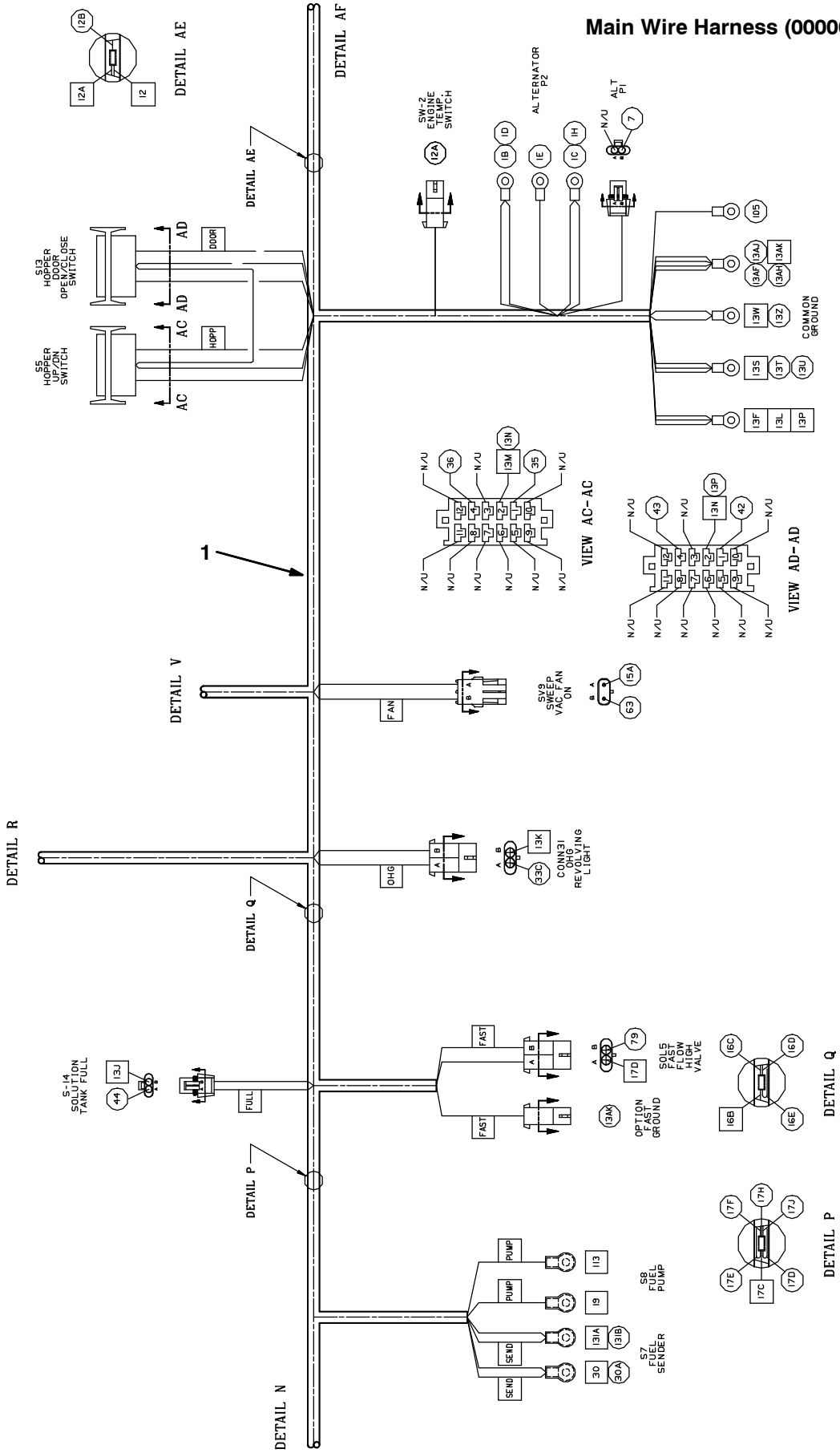

Home Find... Go To..

Fig. 81 - Electrical Wire Harnesses Group

Main Wire Harness (000000-002273)

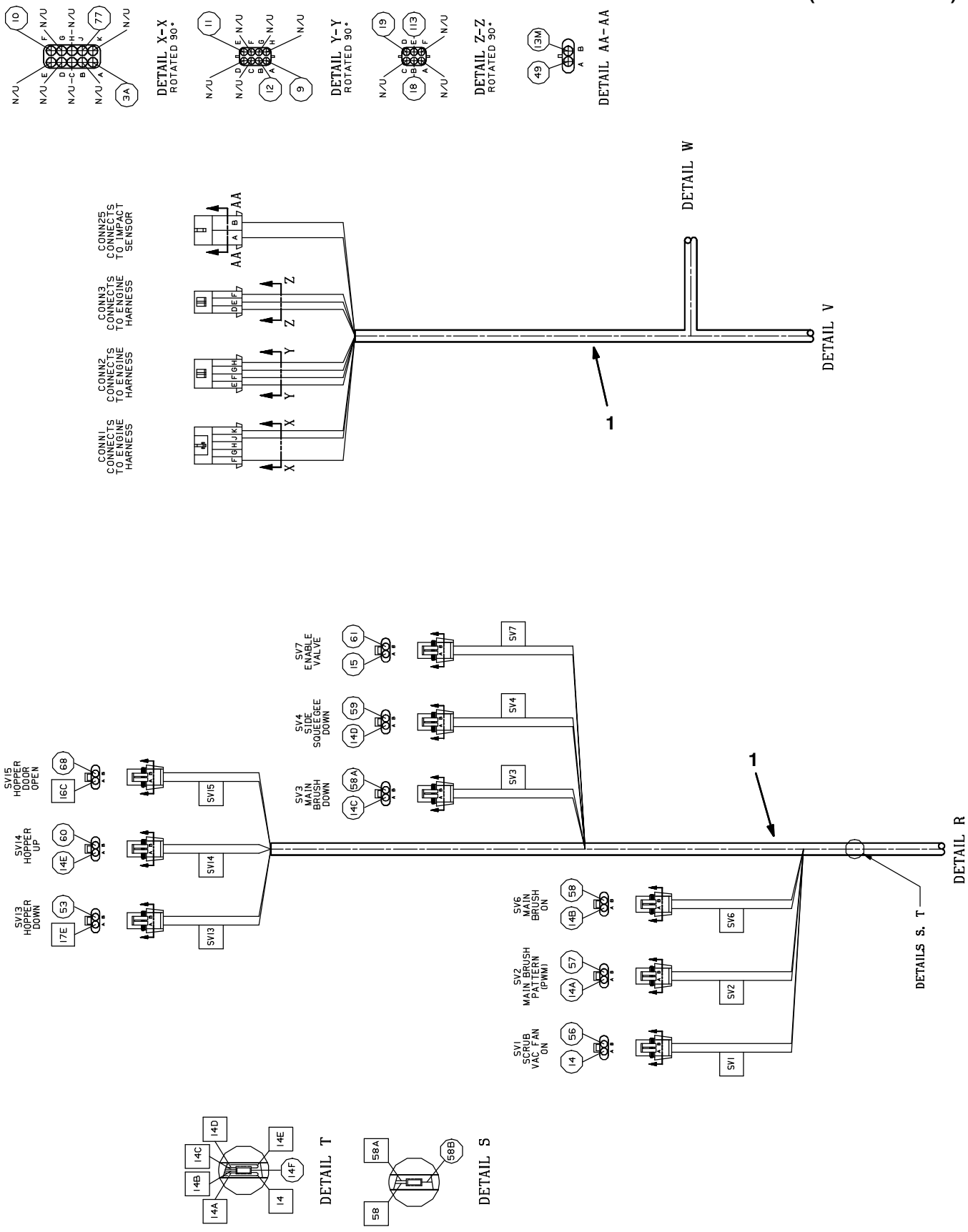

Fig. 81 - Electrical Wire Harnesses Group

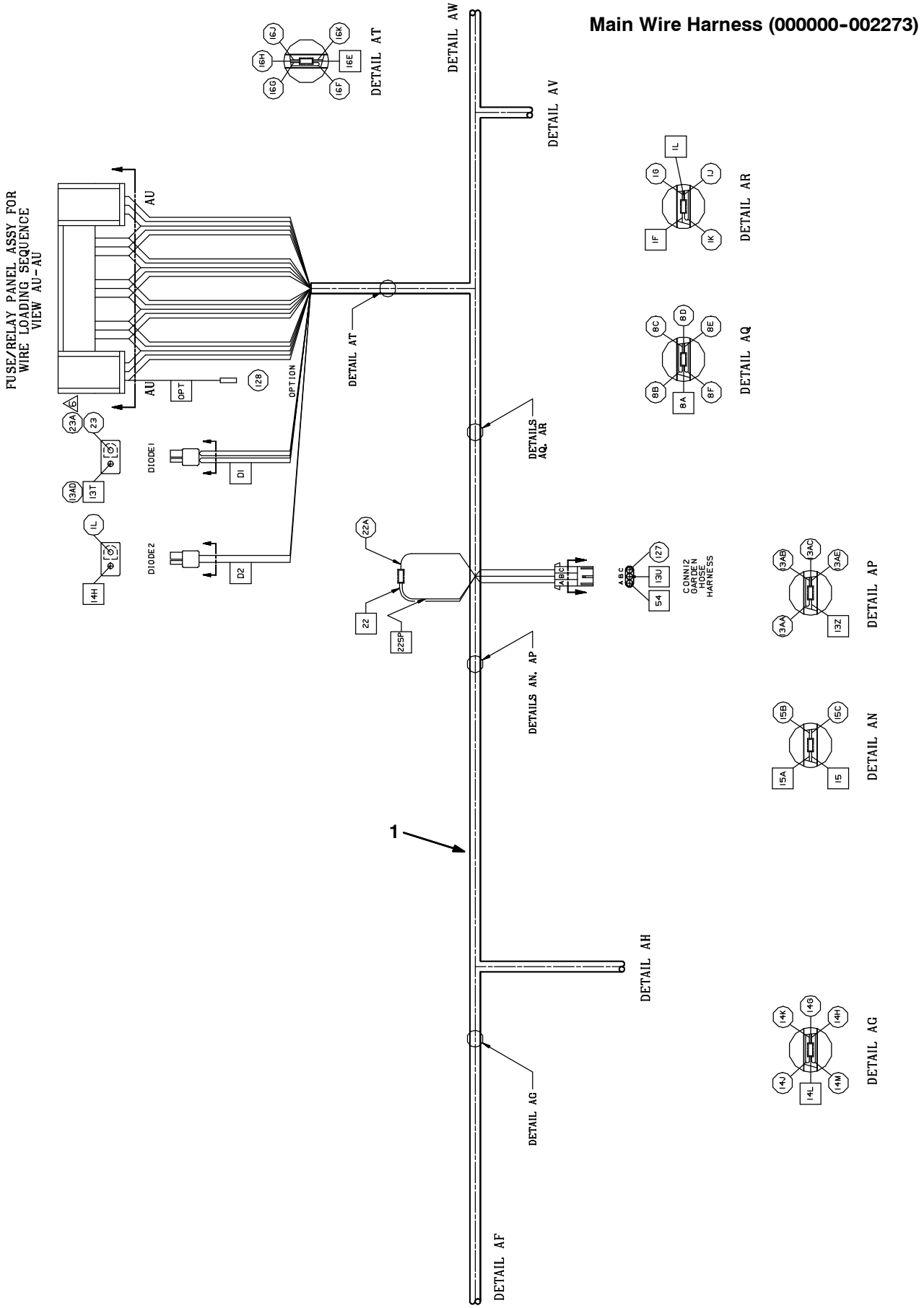

Home Find... Go To..

Fig. 81 - Electrical Wire Harnesses Group

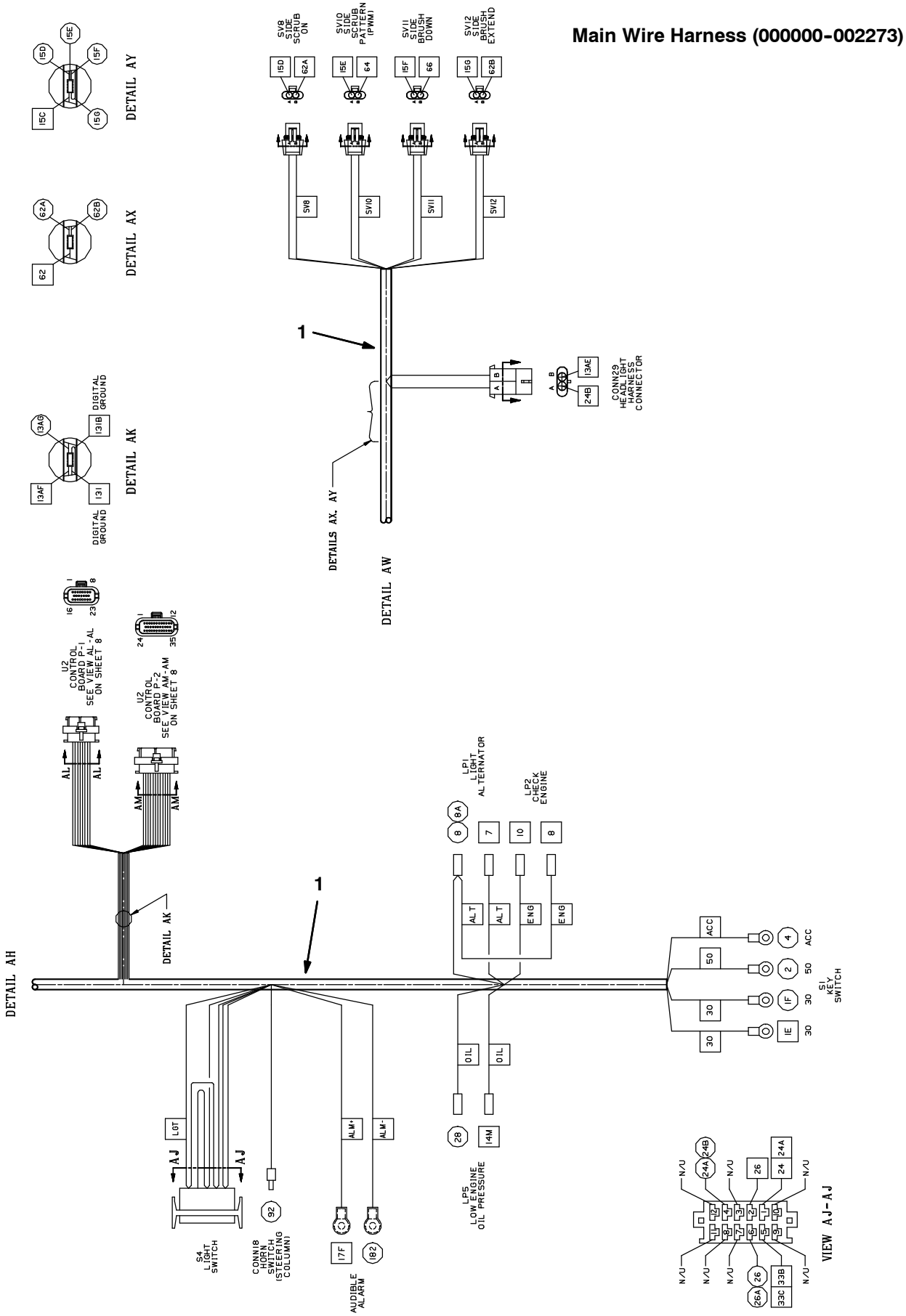

Fig. 81 - Electrical Wire Harnesses Group

Main Wire Harness (000000-002273)

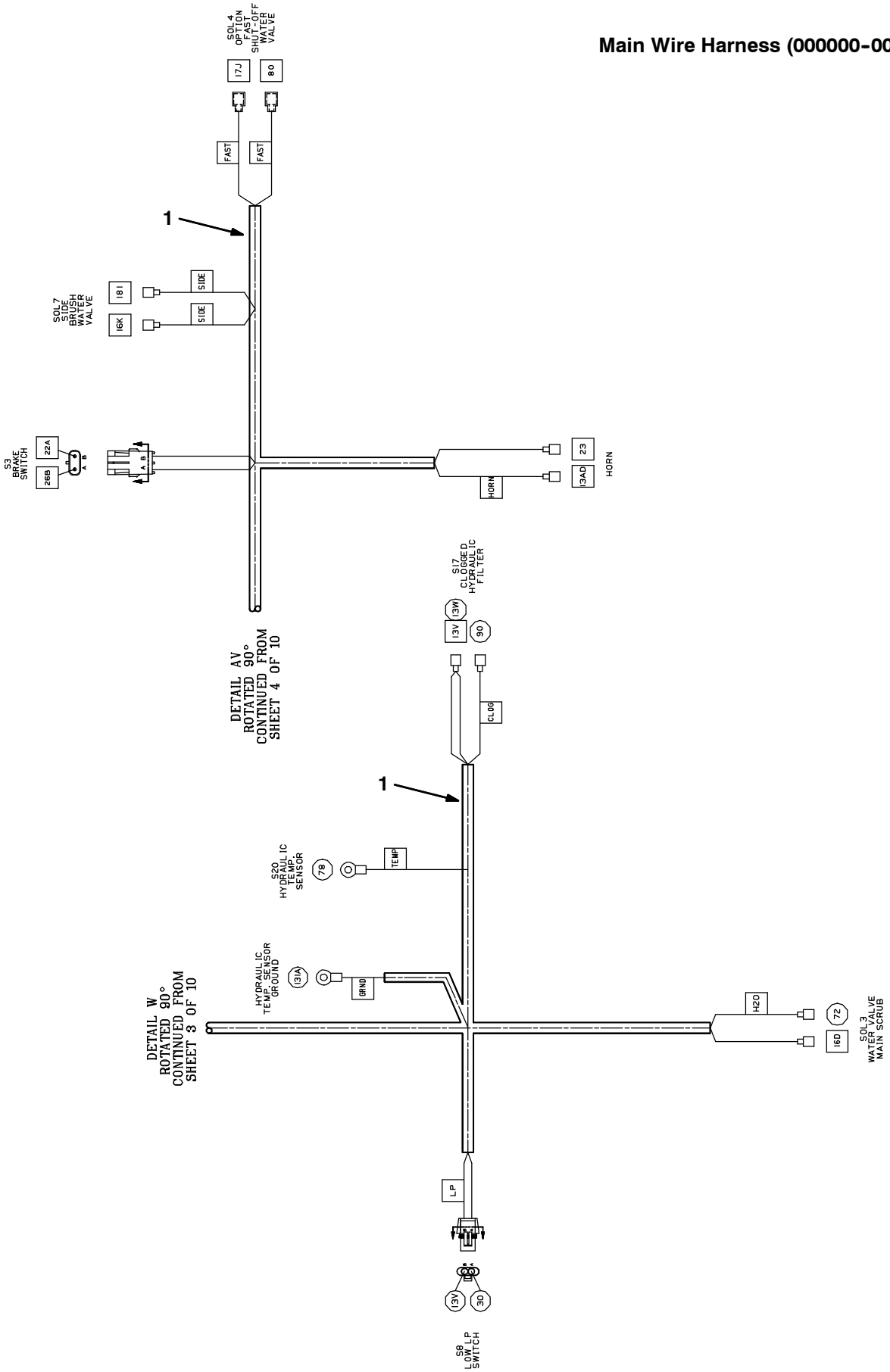

Home Find... Go To..

Fig. 81 - Electrical Wire Harnesses Group

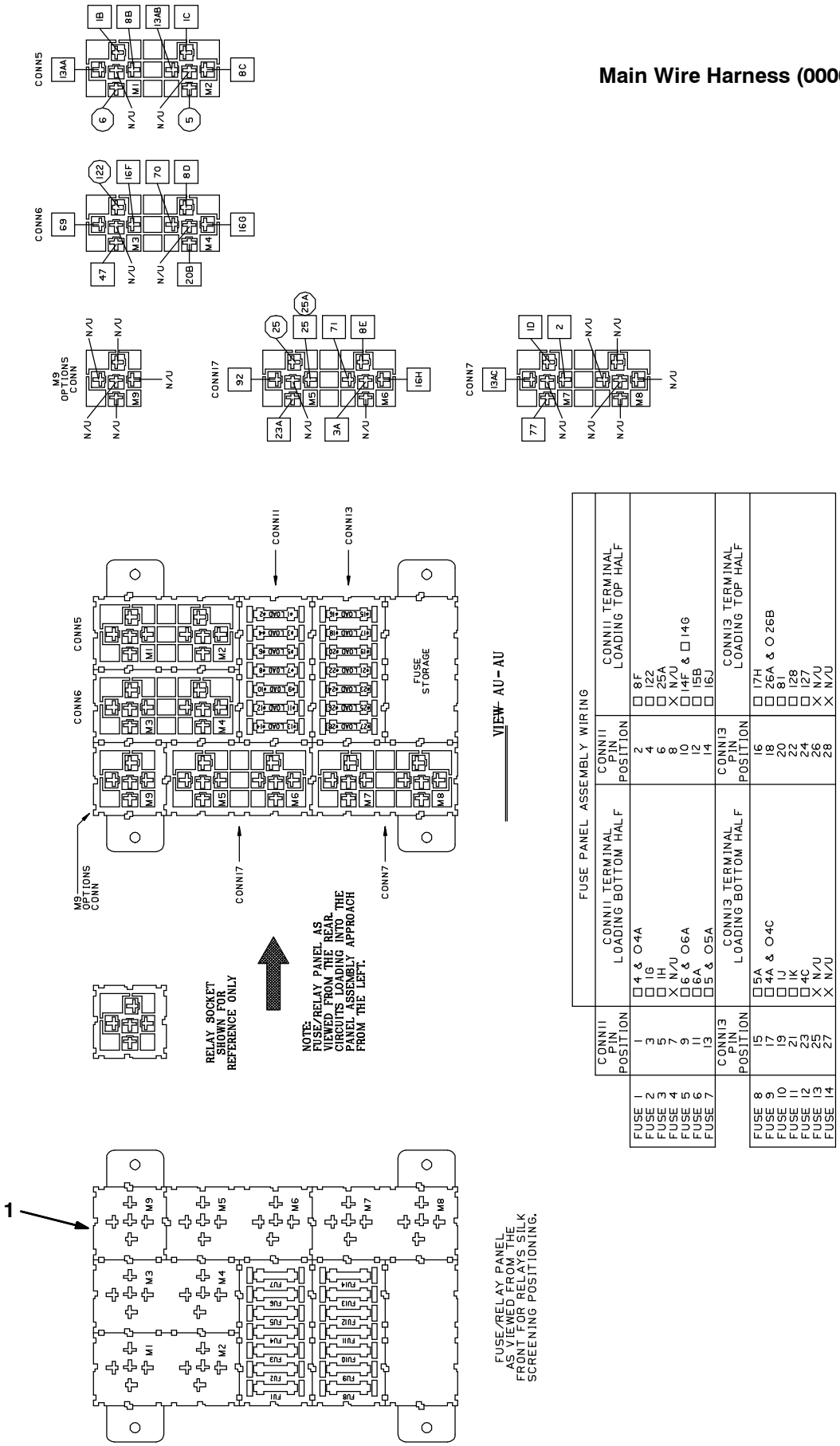

Fig. 81 - Electrical Wire Harnesses Group

Main Wire Harness (002274-)

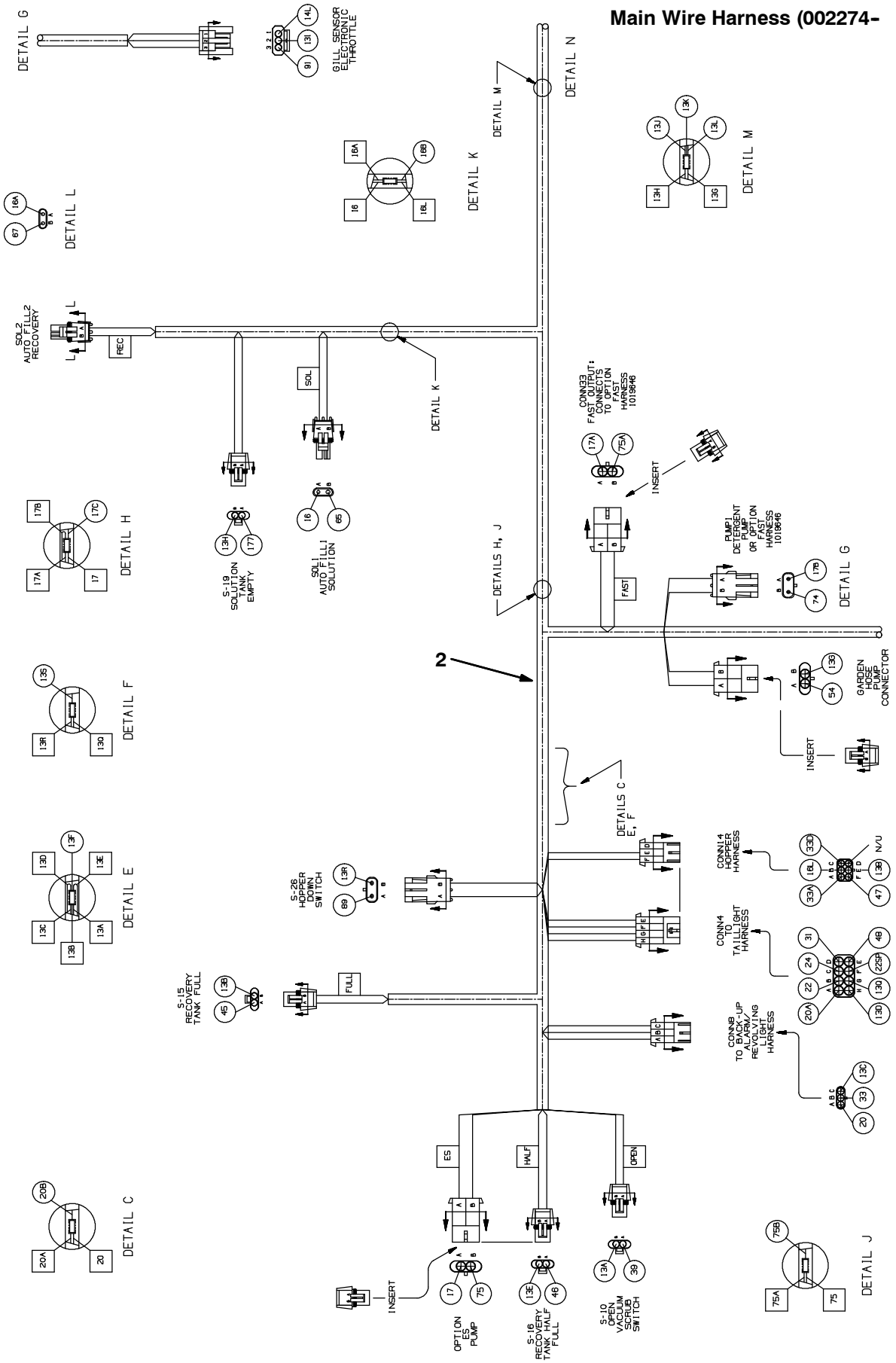

Home Find... Go To..

Fig. 81 - Electrical Wire Harnesses Group

Main Wire Harness (002274-)

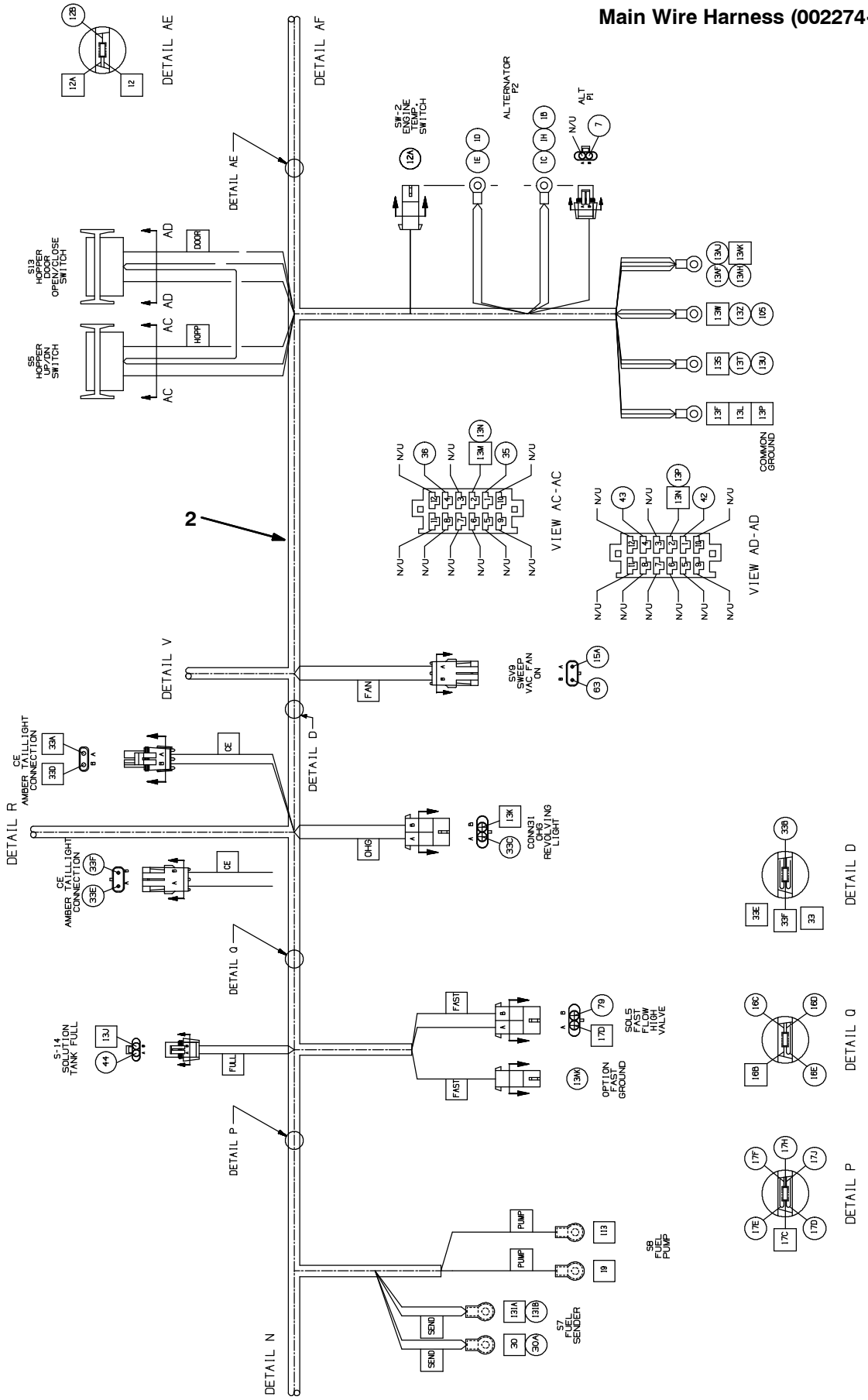

Fig. 81 - Electrical Wire Harnesses Group

Main Wire Harness (002274-)

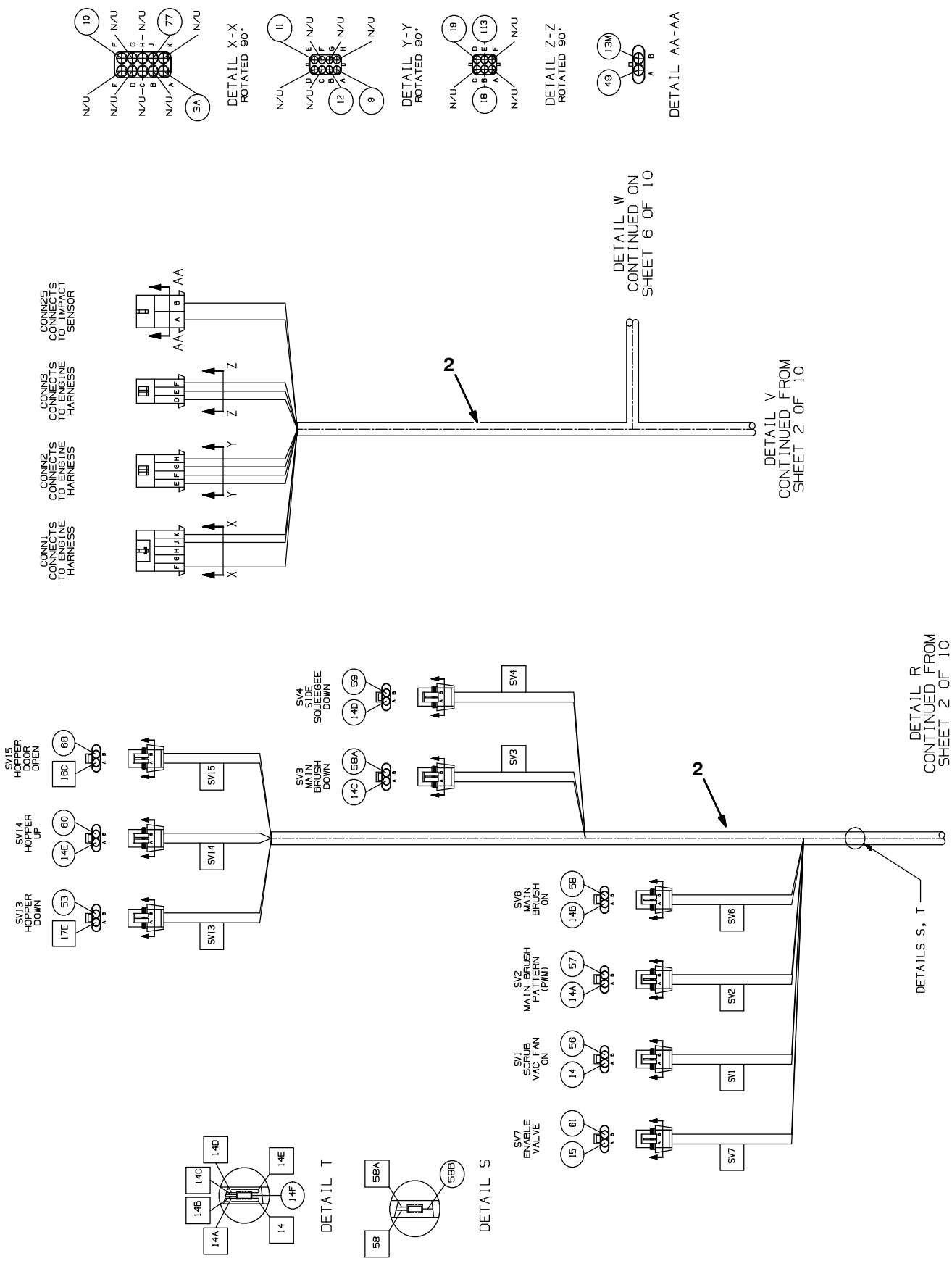

Home Find... Go To..

Fig. 81 - Electrical Wire Harnesses Group

Main Wire Harness (002274-)

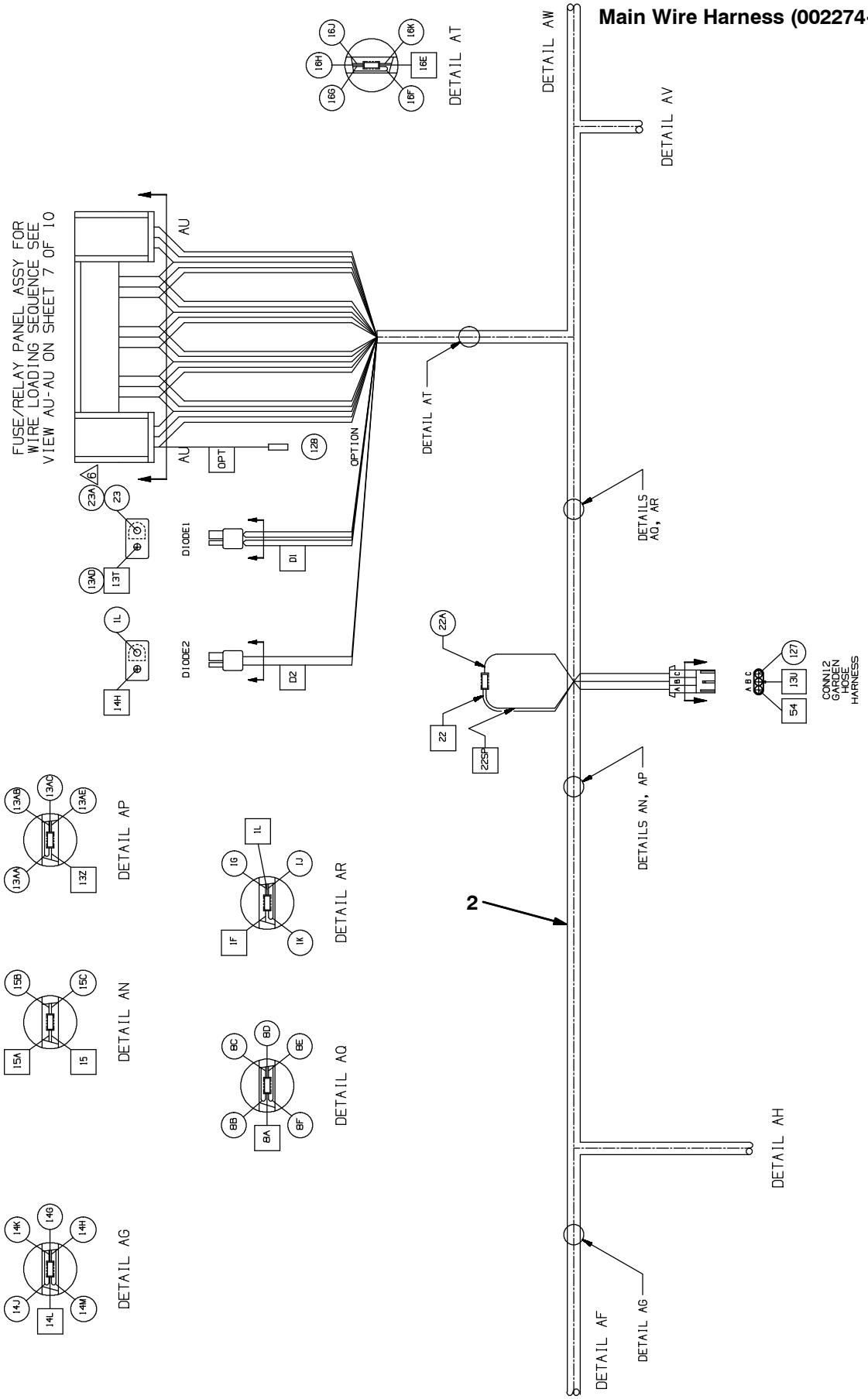

Fig. 81 - Electrical Wire Harnesses Group

Main Wire Harness (002274-)

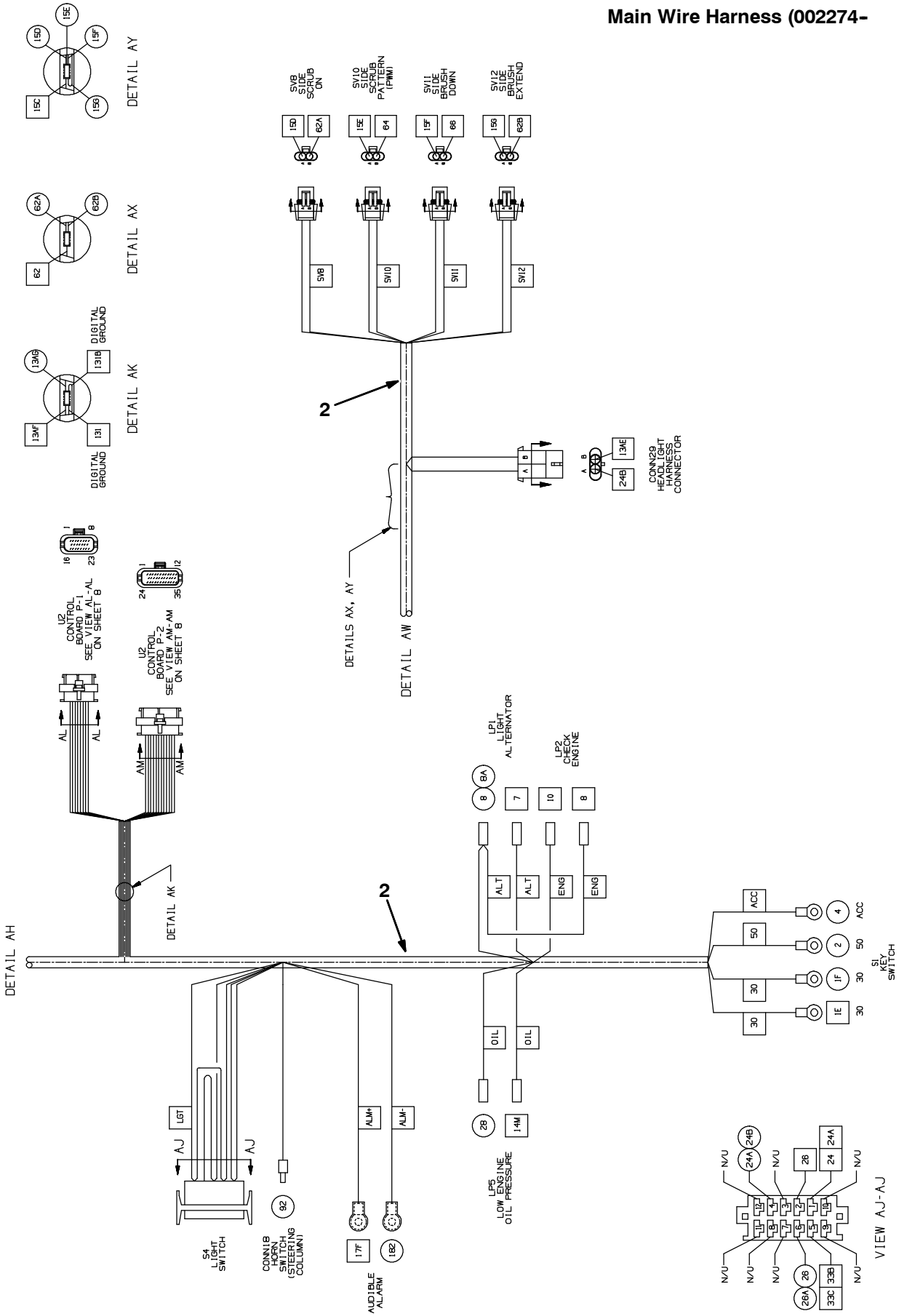

Home Find... Go To..

Fig. 81 - Electrical Wire Harnesses Group

Main Wire Harness (002274-)

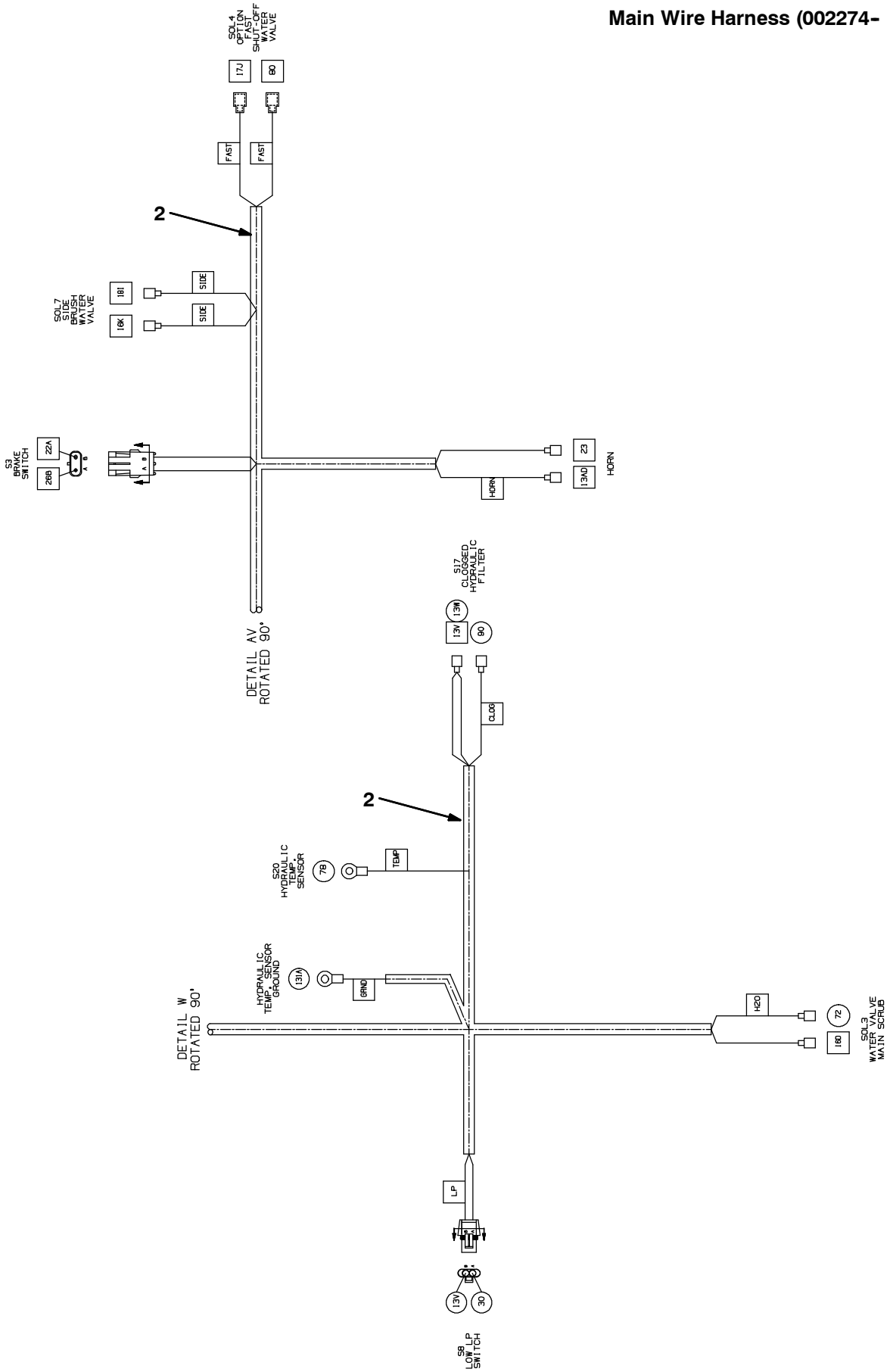

Fig. 81 - Electrical Wire Harnesses Group

Main Wire Harness (002274-)

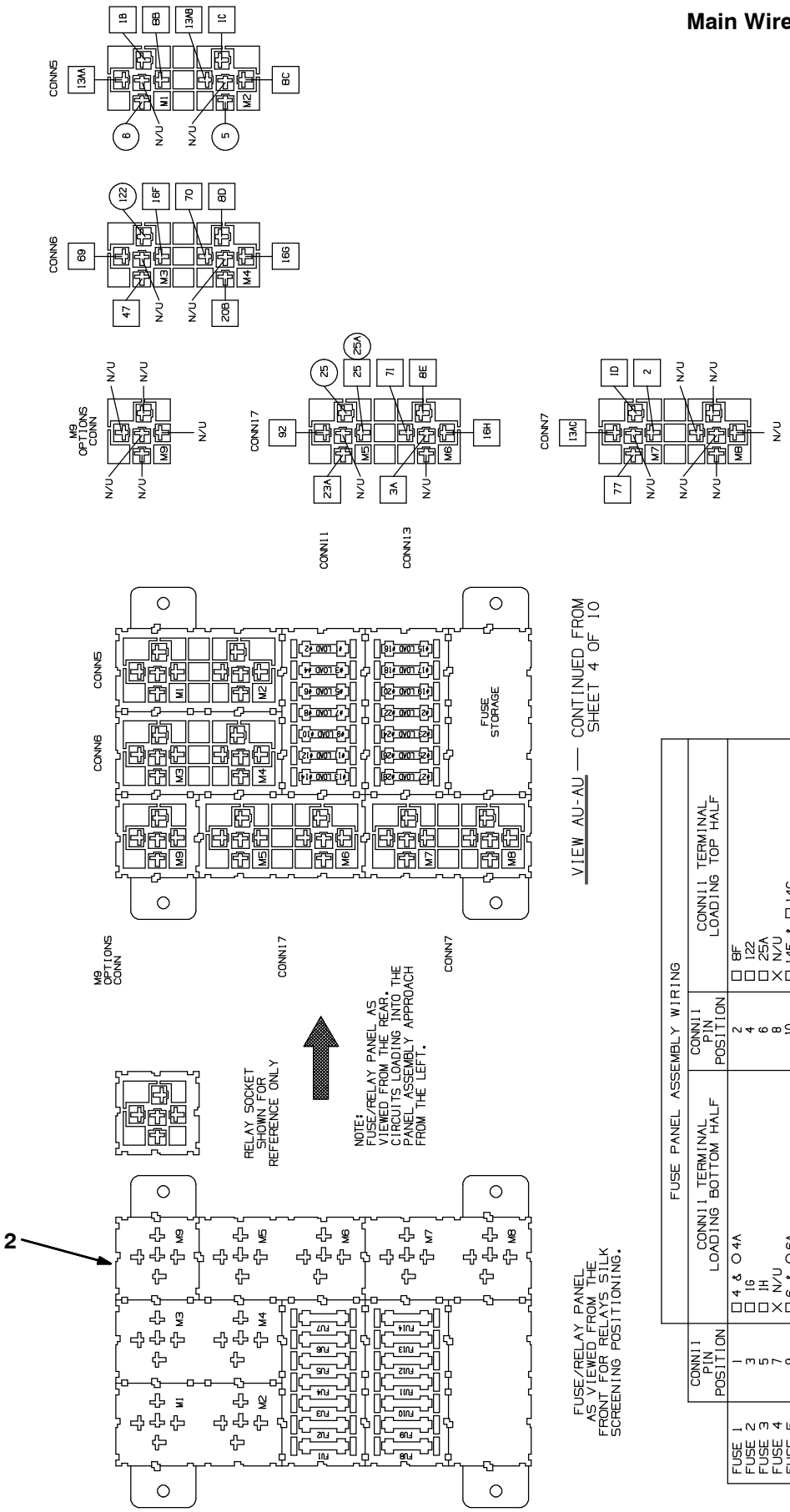

Home Find... Go To..

Fig. 81 - Electrical Wire Harnesses Group

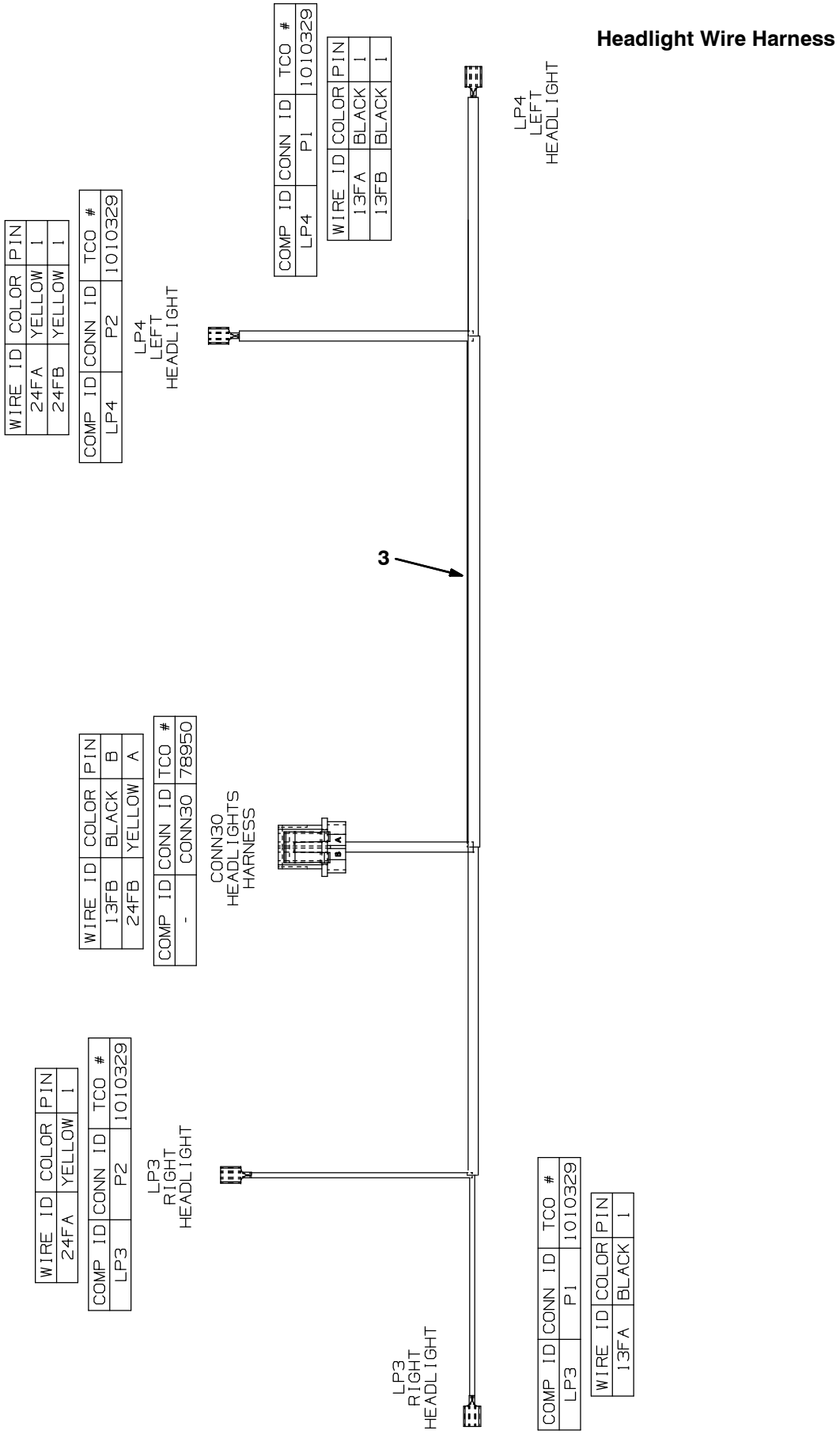

Fig. 81 - Electrical Wire Harnesses Group

Hopper Wire Harness (000000-002273)

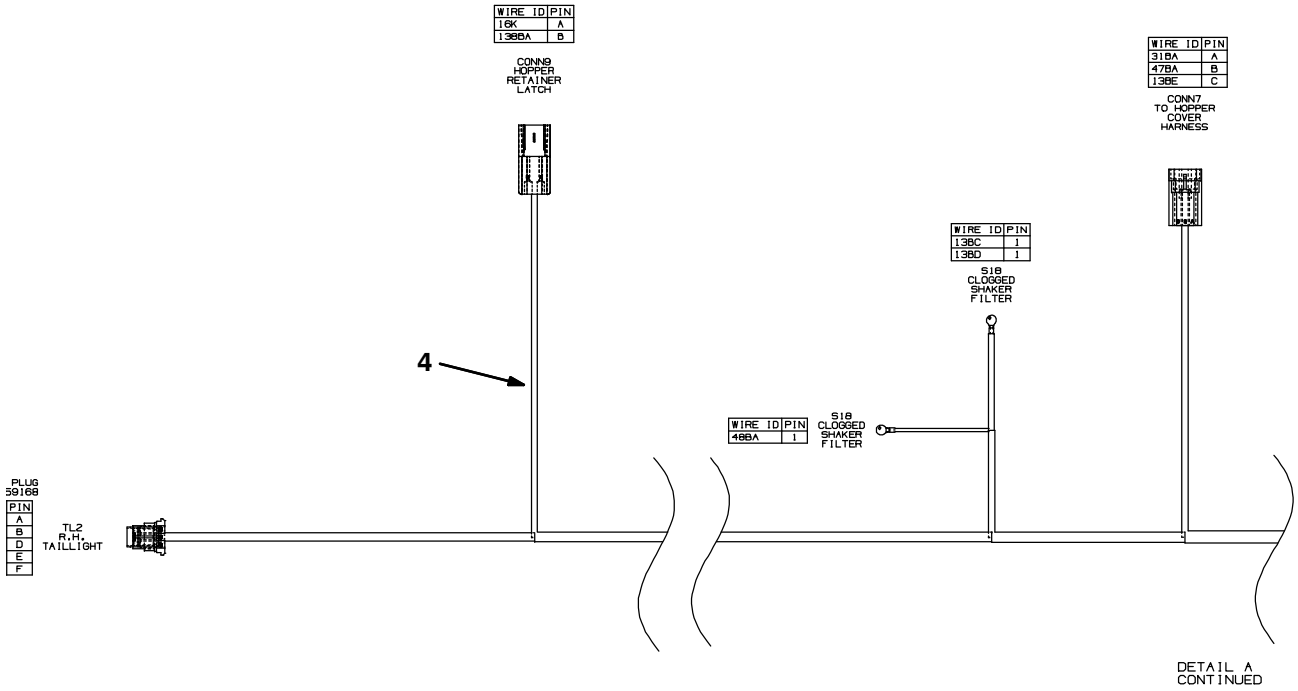

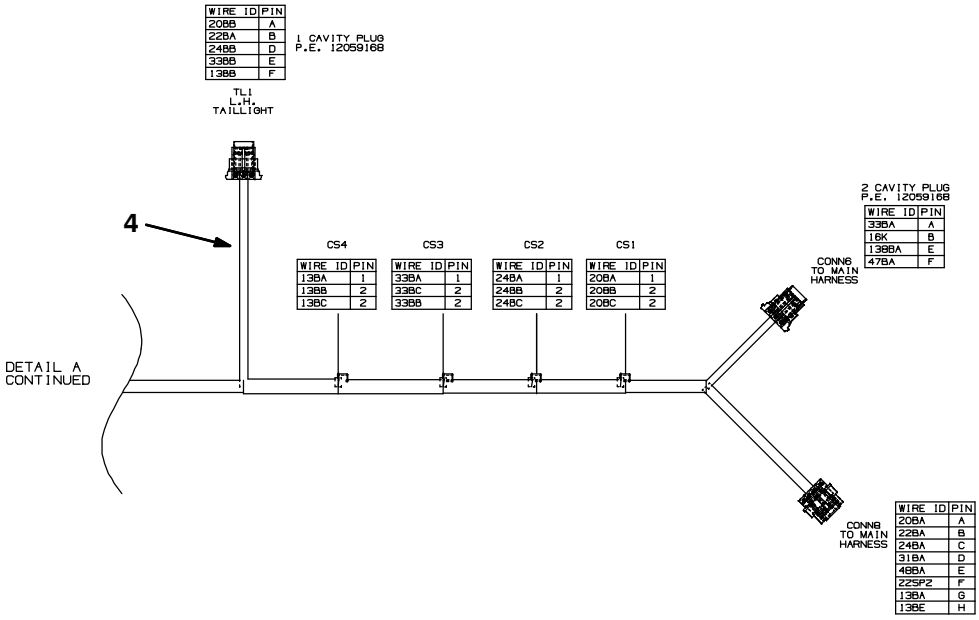

Home Find... Go To..

Fig. 81 - Electrical Wire Harnesses Group

Hopper Wire Harness (002274-)

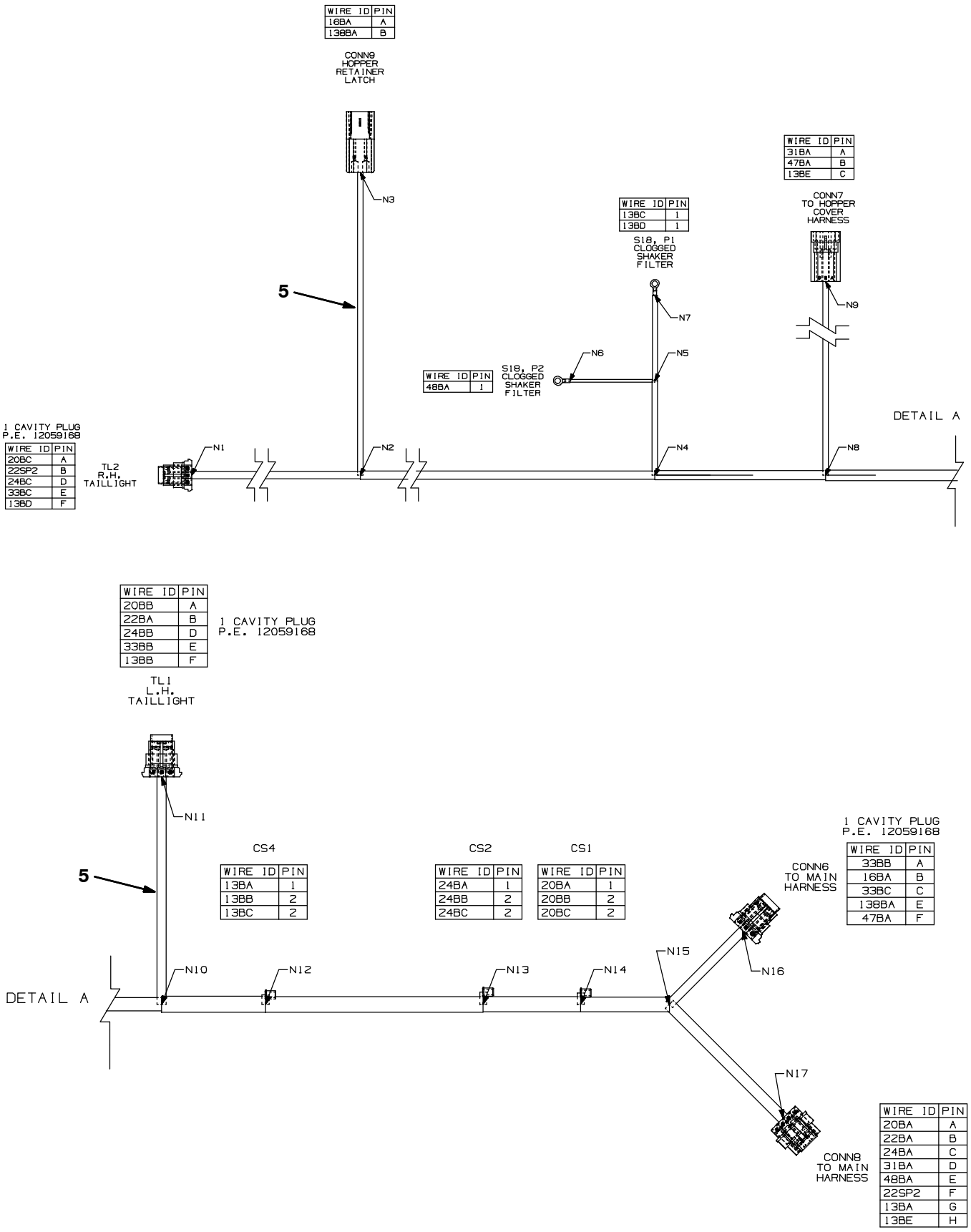

Fig. 81 - Electrical Wire Harnesses Group

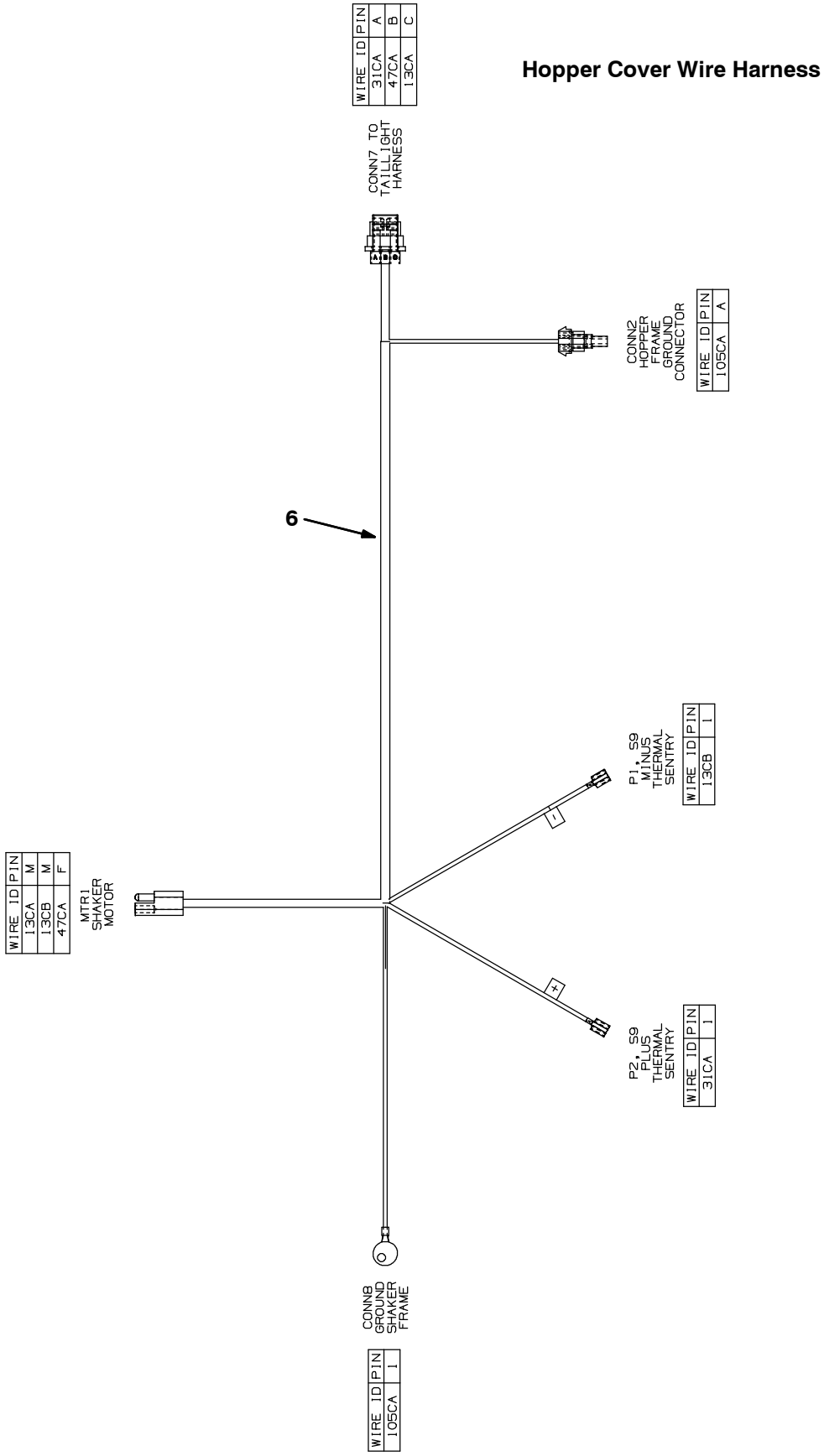

Home Find... Go To..

Fig. 81 - Electrical Wire Harnesses Group

Gasoline/LPG Engine Harness (000000-001999)

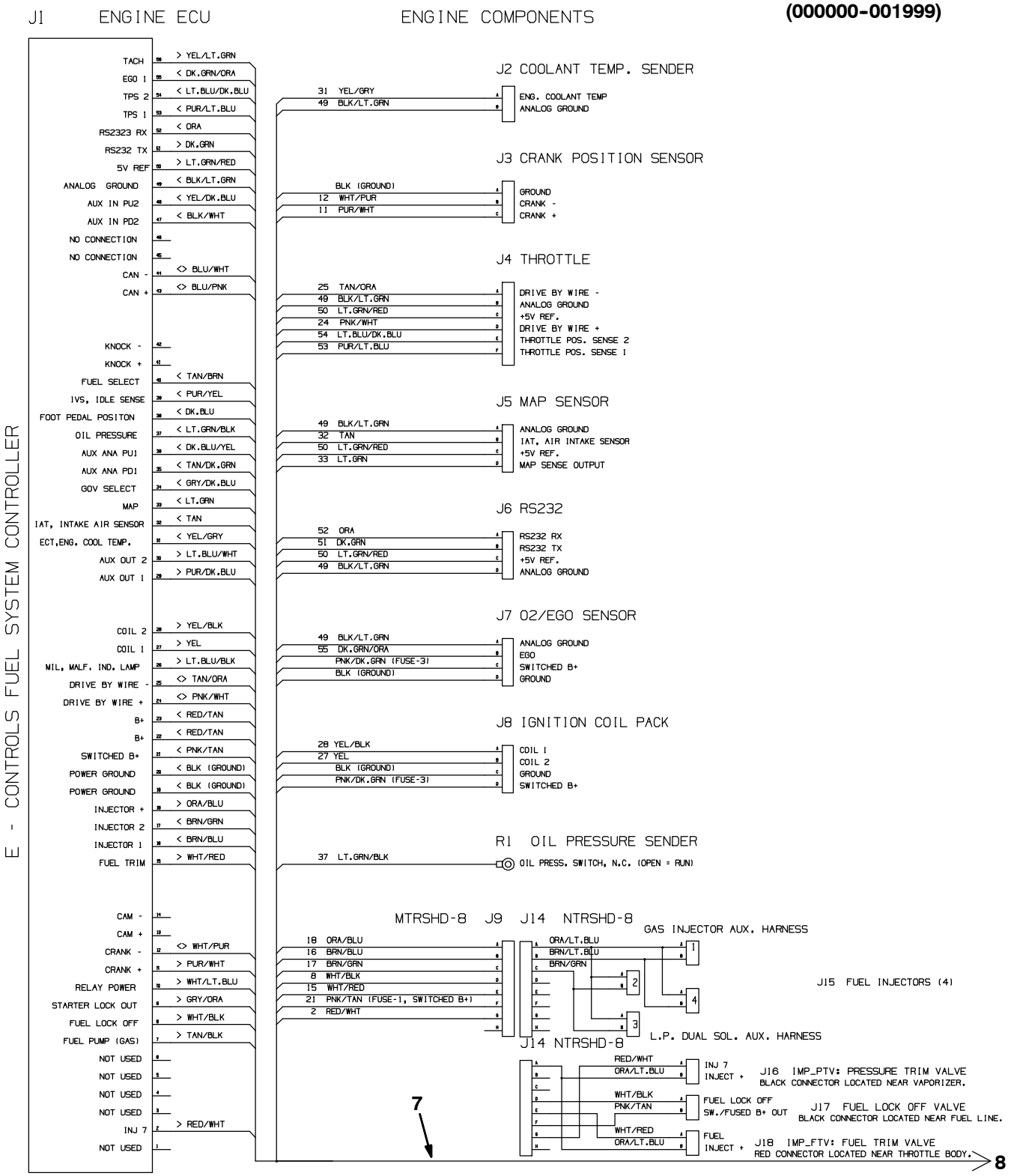

Fig. 81 - Electrical Wire Harnesses Group

Gasoline/LPG Engine Harness (000000-001999)

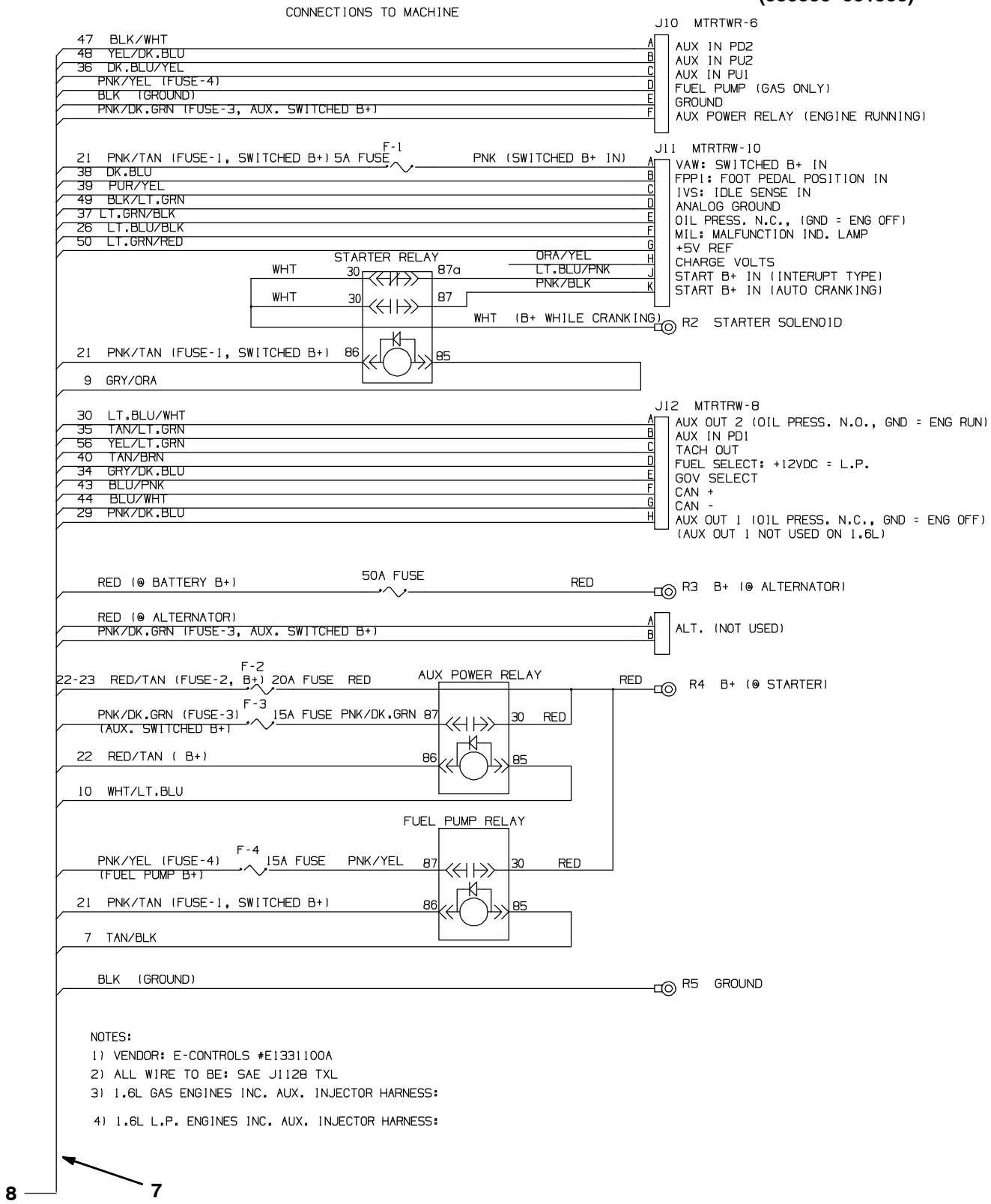

1018547

Home Find... Go To..

Fig. 81 - Electrical Wire Harnesses Group

Gasoline/LPG Engine Harness (000000-001999)

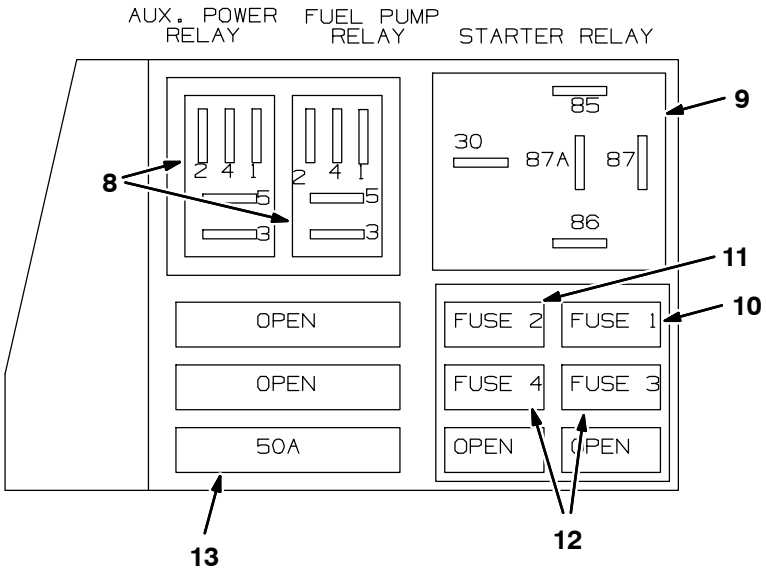

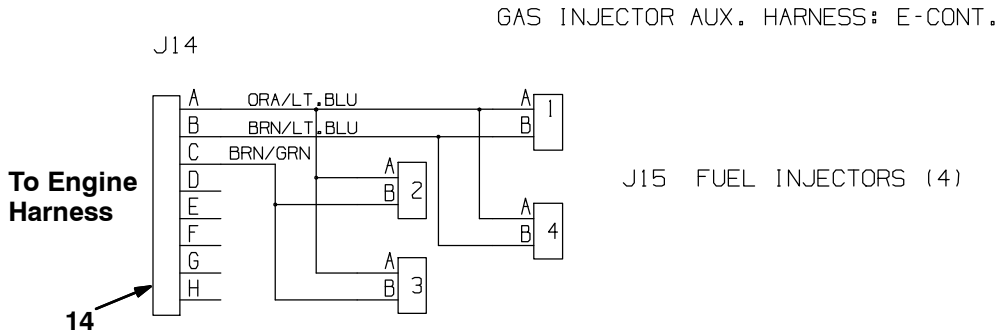

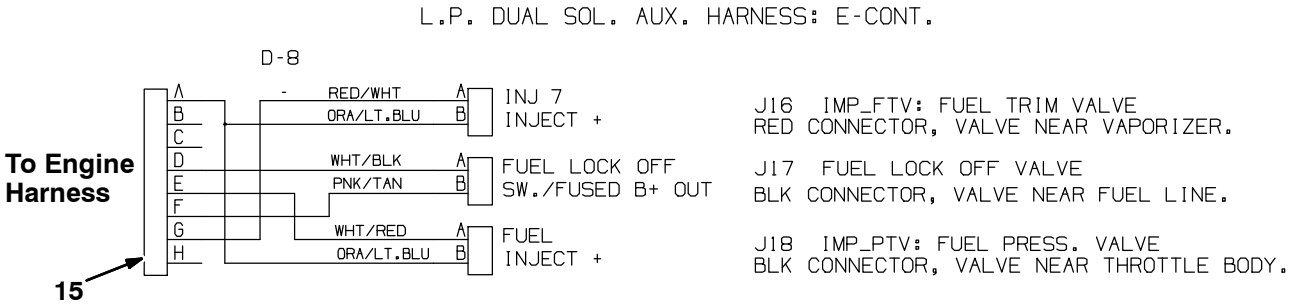

Fig. 81 - Electrical Wire Harnesses Group

Gasoline/LPG Engine Harness (002000-)

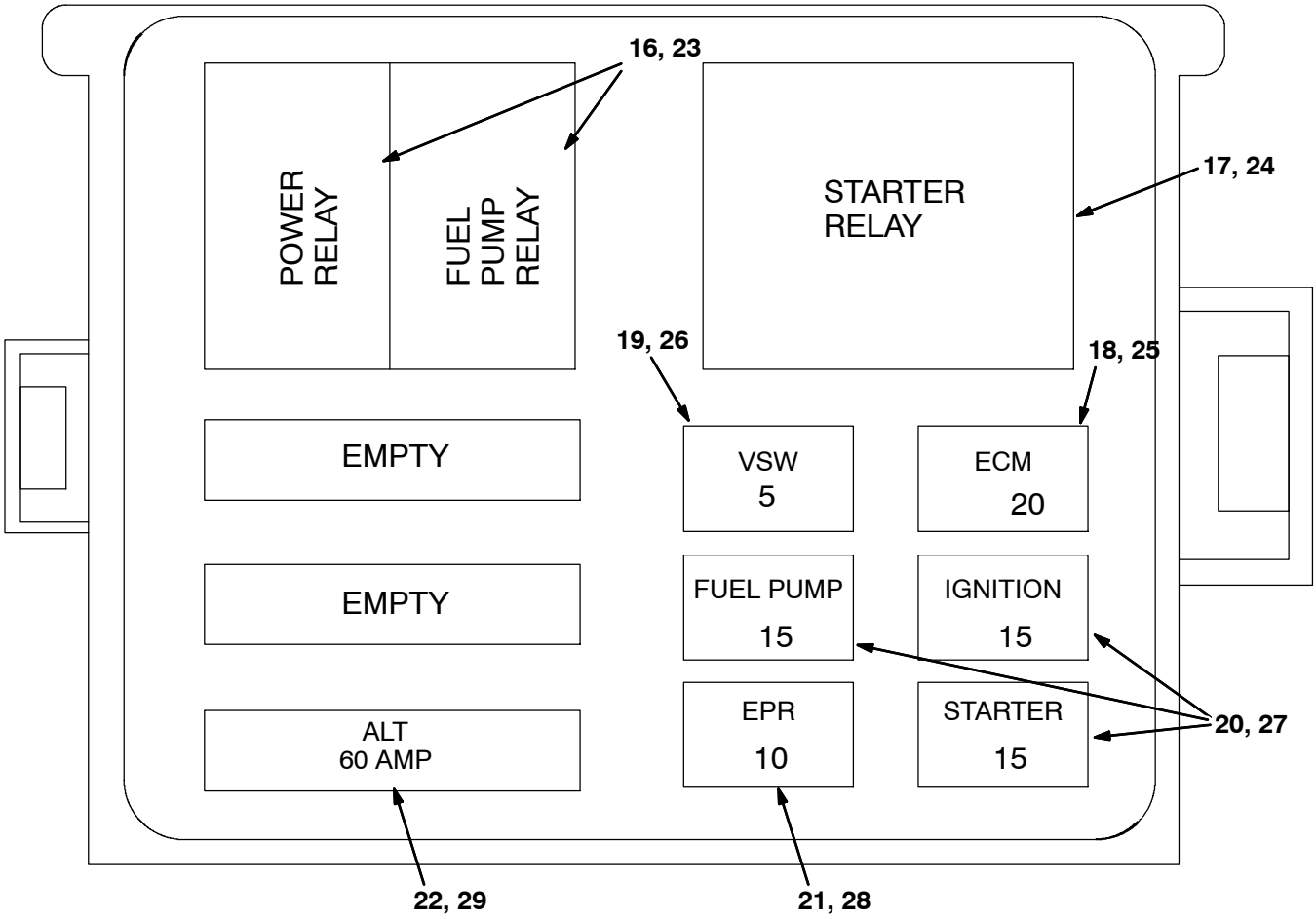

Home Find... Go To..

Fig. 81 - Electrical Wire Harnesses Group

Gasoline/LPG Engine Adapter Harness (002000-)

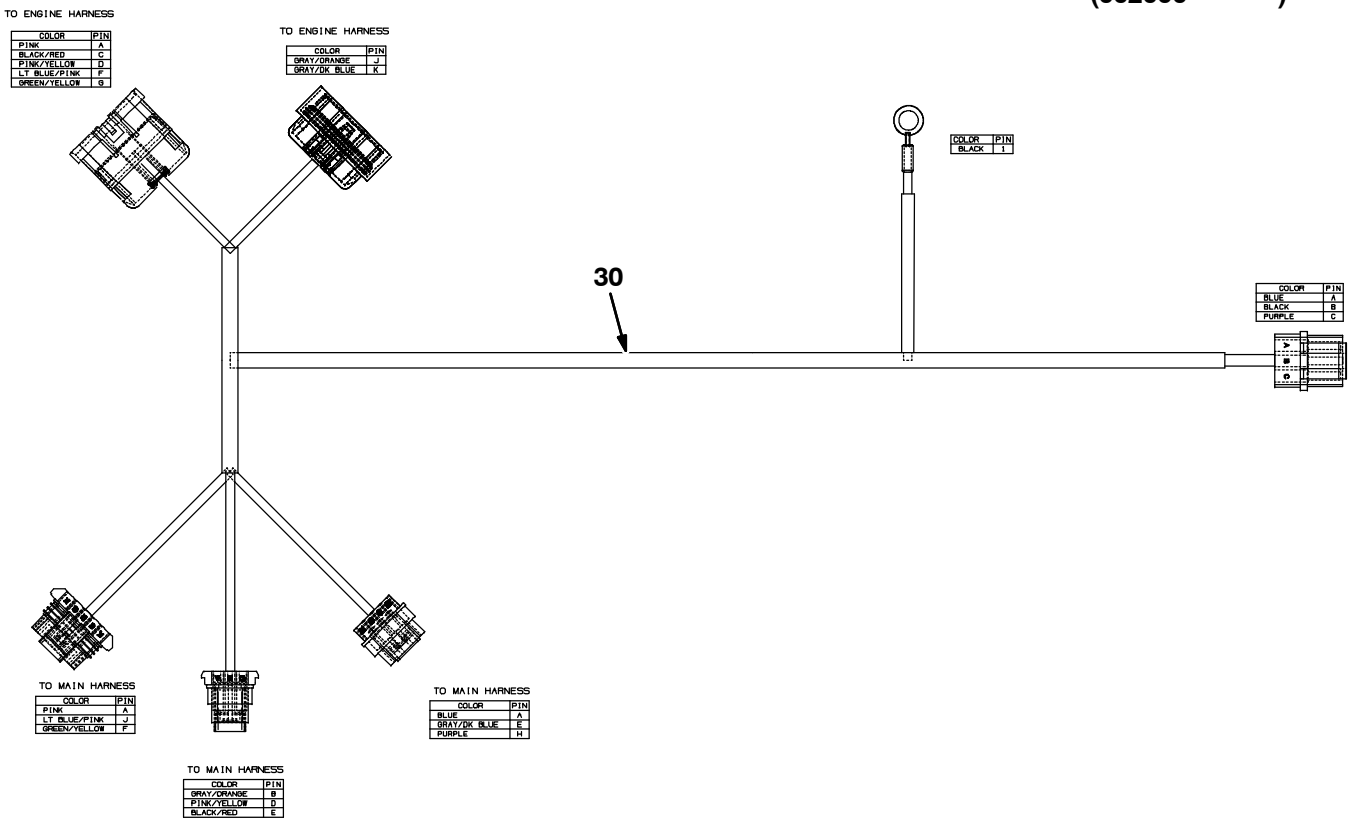

354389-354459

Fig. 81 - Electrical Wire Harnesses Group

	Ref.	Part No.	Serial Number	Description	Qty.
	1	1018549	(000000-002273)	Harness, Main [M20]	1
	2	1040620	(002274-)	Harness, Main [M20]	1
	3	1024141	(000000-)	Harness, Headlight [M20 And T20]	1
	4	1019630	(000000-002273)	Harness, Hppr [M20]	1
	5	1033624	(002274-)	Harness, Hppr [M20/M30]	1
	6	1019950	(000000-)	Harness, Hppr, Cover [M20]	1
▽	7	1011018	(000000-001999)	Harness, Eng [1.6l, Gm, E-cntrl]	1
▲	8	394916	(000000-001999)	Relay, 12vdc, 20a, Spdt	2
▲	9	57804	(000000-001999)	Relay, 12vdc, 40a, Spdt	1
▲	10	372235	(000000-001999)	Fuse, 5 Amp, [Min-5]	1
▲	11	372237	(000000-001999)	Fuse, 20 Amp, [Min-20]	1
▲	12	372236	(000000-001999)	Fuse, 15 Amp, [Min-15]	2
▲	13	394921	(000000-001999)	Fuse, 50amp	1
	14	1011019	(000000-001999)	Harness, Injector, Gas [1.6l,Gm,E-cntrl]	1
	15	1011020	(000000-001999)	Harness, Injector, Lpg [1.6l,Gm,E-cntrl]	1
▽		384997	(002000-003122)	Harness, Wire, Eng, Gas [Gm 1.6L]	1
▲	16	394916	(002000-003122)	Relay, 12vdc, 20a, Spdt	2
▲	17	57804	(002000-003122)	Relay, 12vdc, 40a, Spdt	1
▲	18	372237	(002000-003122)	Fuse, 20 Amp, [Min-20]	1
▲	19	372235	(002000-003122)	Fuse, 5 Amp, [Min-5]	1
▲	20	372236	(002000-003122)	Fuse, 15 Amp, [Min-15]	2
▲	21	384999	(002000-003122)	Fuse, 10 Amp	1
▲	22	384998	(002000-003122)	Fuse, 60 Amp	1
▽		1063457	(003123-)	Harness, Wire, Eng, Gas [Gm 1.6L 10]	1
▲	16	394916	(003123-)	Relay, 12vdc, 20a, Spdt	2
▲	17	57804	(003123-)	Relay, 12vdc, 40a, Spdt	1
▲	18	372237	(003123-)	Fuse, 20 Amp, [Min-20]	1
▲	19	372235	(003123-)	Fuse, 5 Amp, [Min-5]	1
▲	20	372236	(003123-)	Fuse, 15 Amp, [Min-15]	2
▲	21	384999	(003123-)	Fuse, 10 Amp	1
▲	22	384998	(003123-)	Fuse, 60 Amp	1
▽		384990	(002000-003122)	Harness, Wire, Eng, Lpg [Gm 1.6l]	1
▲	23	394916	(002000-003122)	Relay, 12vdc, 20a, Spdt	2
▲	24	57804	(002000-003122)	Relay, 12vdc, 40a, Spdt	1
▲	25	372237	(002000-003122)	Fuse, 20 Amp, [Min-20]	1
▲	26	372235	(002000-003122)	Fuse, 5 Amp, [Min-5]	1
▲	27	372236	(002000-003122)	Fuse, 15 Amp, [Min-15]	2
▲	28	384999	(002000-003122)	Fuse, 10 Amp	1
▲	29	384998	(002000-003122)	Fuse, 60 Amp	1
▽		1063456	(003123-)	Harness, Wire, Eng, Lpg [Gm 1.6L 10]	1
▲	23	394916	(003123-)	Relay, 12vdc, 20a, Spdt	2
▲	24	57804	(003123-)	Relay, 12vdc, 40a, Spdt	1
▲	25	372237	(003123-)	Fuse, 20 Amp, [Min-20]	1
▲	26	372235	(003123-)	Fuse, 5 Amp, [Min-5]	1
▲	27	372236	(003123-)	Fuse, 15 Amp, [Min-15]	2
▲	28	384999	(003123-)	Fuse, 10 Amp	1
▲	29	384998	(003123-)	Fuse, 60 Amp	1
	30	1032216	(002000-)	Harness, Adapter, Eng [2007]	1

Fig. 82 - Label Group

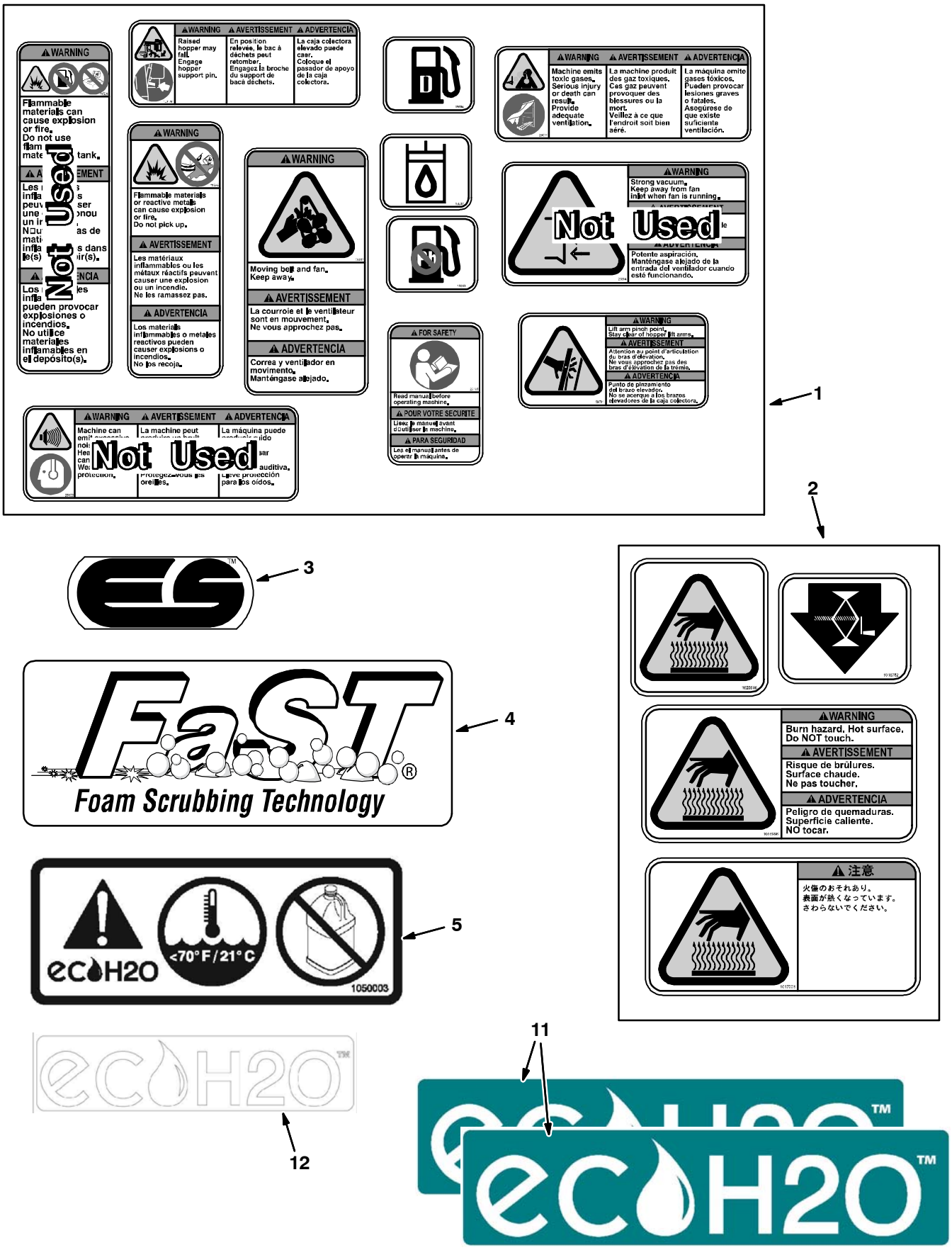

Fig. 82 - Label Group

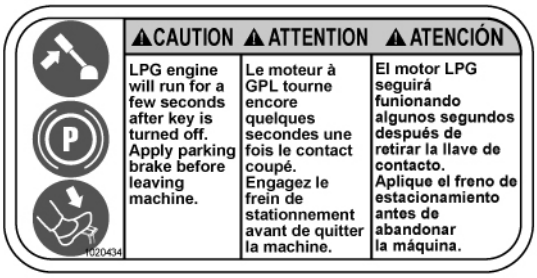

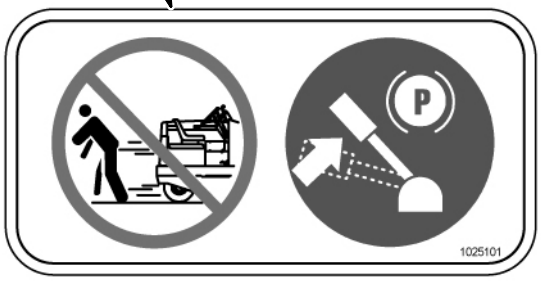

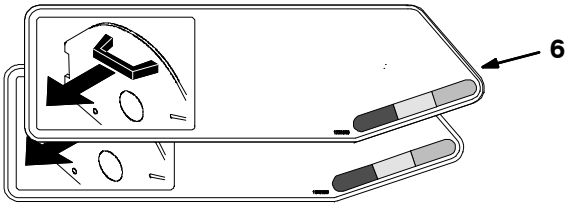

M20 - G/LP

Ref.	Part No.	Serial Number	Description	Qty.
1	77221	(000000-)	Label Set, Info/Hzrd, Swpr / Scrbr	1
2	1017141	(000000-)	Label Set, Hi Temp	1
3	1027353	(000000-)	Label, Off-White, Es (Option)	3
4	1027372	(000000-)	Label, Off-White [Fast] (Option)	3
5	1050003	(000000-)	Label [User, Attention, ec-H2O]	2
6	1031017	(000000-)	Label Set, Brush Indicator & Removal	1
7	1032450	(000000-)	Label Set, Info/Hzrd, Swpr / Scrbr, Tj (Japan Only)	1
8	1020434	(000000-)	Label, Caution [Apply Parking Brake]	1
9	1025101	(000000-)	Label, Caution [Apply Parking Brake] (Japan Only)	1
10	1061194	(000000-)	Label, Model, Bl-Gr [M20]	1
11	1050008	(000000-)	Label, Tl [ec-H2O]	2
12	1052755	(000000-)	Label, Clr [ec-H2O]	1

SECTION 3

Contents **Page**

Fig. 1 – ES Pump Group 3-2
Fig. 2 – ES Tanks Group 3-4
Fig. 3 – Side Brush Motor Group (000000–003076) 3-6
Fig. 4 – Side Brush Motor Group (003077–) 3-8
Fig. 5 – Side Brush Lift Group 3-10
Fig. 6 – Side Brush Solution Control Group . . . 3-12
Fig. 7 – Side Brush Hydraulic Valve Group 3-14
Fig. 8 – Side Brush Hydraulic Hose Group 3-16
Fig. 9 – Fast Solution Pump Group (000000–002532) 3-18
Fig. 10 – Fast Air Pump and Detergent Group (000000–002532) 3-20
Fig. 11 – Fast Foam Filter Group (000000–002532) 3-22
Fig. 12 – Fast Foam Filter Group, Side Brush (000000–002532) 3-24
Fig. 13 – Fast Wire Harness Group (000000–002532) 3-26
Fig. 14 – FaST Pumps and Detergent Group (002533–) 3-28
Fig. 15 – FaST Solution Supply Group (002533–) 3-30
Fig. 16 – FaST Solution Supply Group with Side Brush (002533–) 3-32
Fig. 17 – Fast Wire Harness Group (002533–) 3-34
Fig. 18 – ec–H20 Solution Pump Group 3-36
Fig. 19 – ec–H20 Solution Pump Supply Group . 3-38
Fig. 20 – ec–H20 Solution Supply Group 3-40
Fig. 21 – ec–H20 Solution Supply Group with Side Brush 3-42
Fig. 22 – ec–H20 Wire Harnesses Group 3-44
Fig. 23 – Backup Alarm Kit 3-47
Fig. 24 – Light Kit, Flashing 3-48
Fig. 25 – Light Kit, Revolving 3-50
Fig. 26 – Light Kit, Flashing Overhead Guard . . 3-52
Fig. 27 – Light Kit, Revolving Overhead Guard . 3-53
Fig. 28 – Overhead Guard Kit 3-54
Fig. 29 – Vacuum Wand Kit (000000–002406) . . 3-56
Fig. 30 – Vacuum Wand Kit (002407–) . . . 3-58
Fig. 31 – Spray Nozzle Kit 3-60
Fig. 32 – Transport Group 3-62
Fig. 33 – Squeegee Guard Kit 3-64
Fig. 34 – Fire Extinguisher Kit 3-66
Fig. 35 – Documentation Group 3-67

Fig. 1 - ES Pump Group

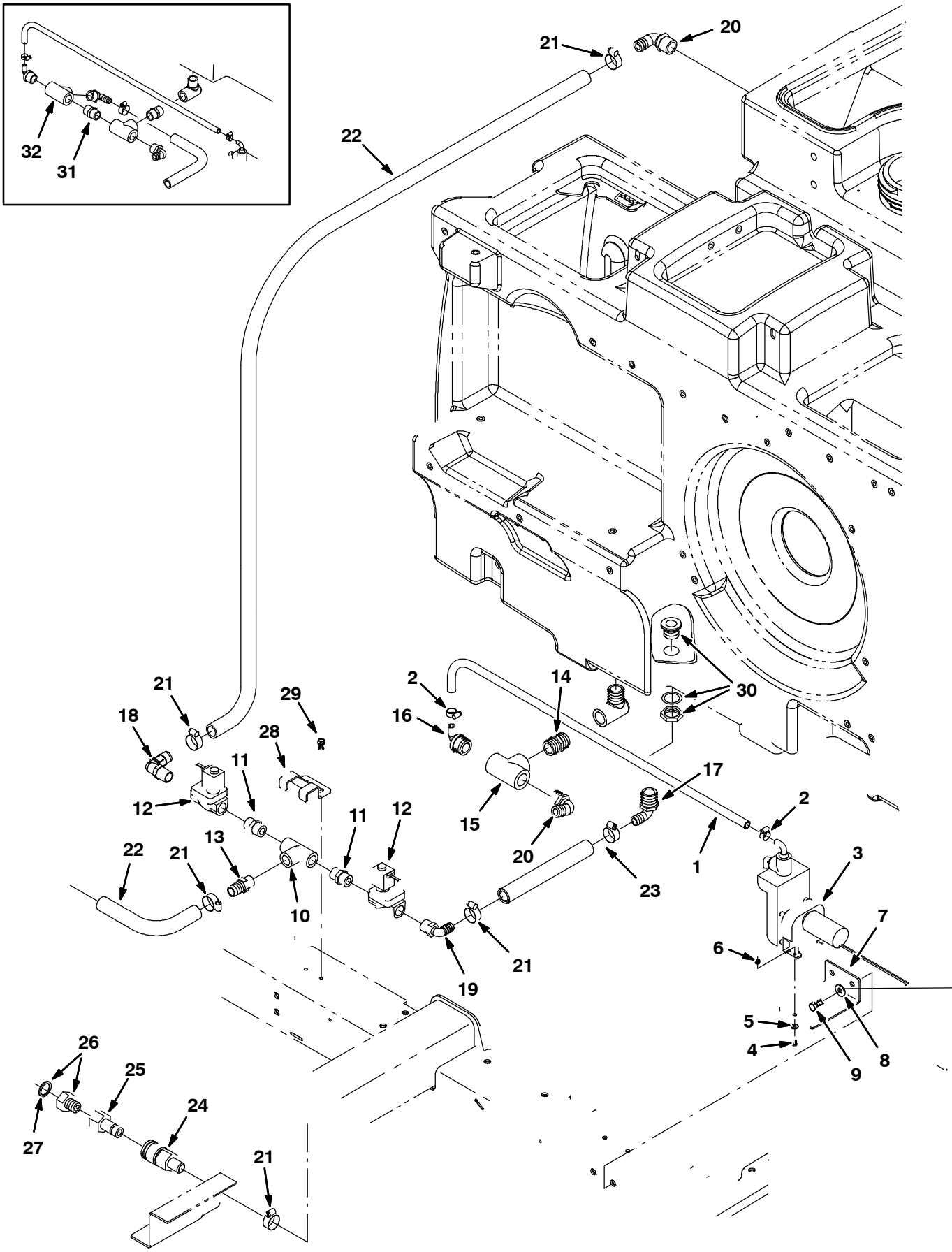

354461

Fig. 1 - ES Pump Group

	Ref.	Part No.	Serial Number	Description	Qty.
	1	41295	(000000-)	Hose, Pvc, Clr, 0.38id 0.56od 48.00l	1
	2	43844	(000000-)	Clamp, Hose, Wormdrive, 0.25-0.62d, .31w	2
	3	73260	(000000-)	Pump, Detgt, 14vdc, 150ml/Min 20psi (See Breakdown)	1
	4	24265	(000000-)	Screw, Pan, M4 X 0.7 X 16, Ss	2
	5	01683	(000000-)	Washer, Flat, #10, Ss	2
	6	33932	(000000-)	Nut, Hex, Lock, M4 X 0.7, Nl, Ss	2
	7	1021325	(000000-)	Bracket, Mtg, Valve	1
	8	01685	(000000-)	Washer, Flat, 0.31, Ss	2
	9	09740	(000000-)	Screw, Hex, M8 X 1.25 X 20, Ss	2
	10	79497	(000000-)	Fitting, Plstc, Tee, Pf08/Pf08/Pf08	1
	11	86508	(000000-)	Fitting, Plstc, Str, Pm08/Pm08	2
	12	73433	(000000-)	Valve, Water, Solenoid, 12vdc 0.08pf	2
	13	78398	(000000-)	Fitting, Plstc, Str, Bm12/Pm08, Nyl	1
	14	24544	(000000-)	Fitting, Plstc, Str, Pm12/Pm12 1.60l	1
	15	42133A	(000000-)	Fitting, Plstc, Tee, Pf12/Pf12/Pf12	1
	16	79484	(000000-)	Fitting, Plstc, E90, Bm06/Pm12, Nyl	1
	17	73468	(000000-)	Fitting, Plstc, E90, Bm10/Pm12	1
	18	63244-2	(000000-)	Fitting, Plstc, E90, Bm12/Pm08	1
	19	630371	(000000-)	Fitting, Plstc, E90, Bm10/Pm08	1
	20	14877	(000000-)	Fitting, Plstc, E90, Bm12/Pm12	2
	21	63810	(000000-)	Clamp, Hose, Wormdrive, 0.56-1.06d, .56w	6
	22	1015045	(000000-)	Hose, Afmkt, Pvc, Brd 0.75id 08ft	1
	23	369811	(000000-)	Hose, Pvc, Brd, 0.62id 0.88od 09.00l	1
	24	24105	(000000-)	Fitting, Brs, Qdc, Bm12/Qf08	1
	25	33295	(000000-)	Fitting, Brs, Qdc, Pf08 [Parker Bh3f]	1
▽	26	375322	(000000-)	Fitting Kit, Hose, Garden	1
▲	27	01316	(000000-)	Washer, Flat, 0.66b 1.00d .12, Rbr	1
	28	1016837	(000000-)	Bracket, Mtg, Valve	1
	29	361339	(000000-)	Screw, Hex, M6 X 1.0 X 16, Fmg	2
	30	377349	(xxxxxx-)	Fitting, Plstc, Pf12/Pf12, Bh	1
	31	24544	(000000-xxxxxx)	Fitting, Plstc, Str, Pm12/Pm12 1.60l	1
	32	42133A	(000000-xxxxxx)	Fitting, Plstc, Tee, Pf12/Pf12/Pf12	1

Fig. 2 - ES Tanks Group

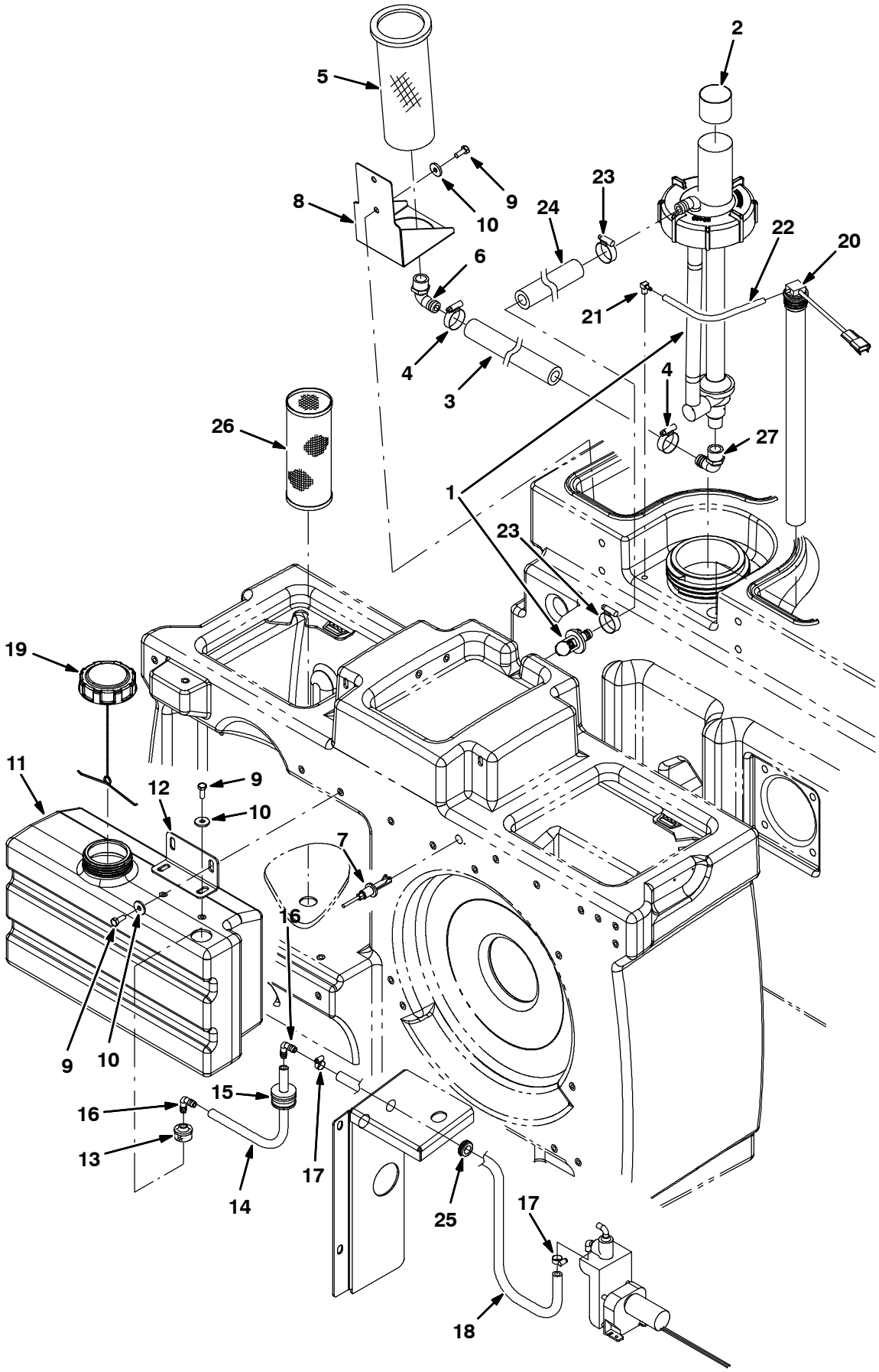

354462

Fig. 2 - ES Tanks Group

Ref.	Part No.	Serial Number	Description	Qty.
1	1021210	(000000-)	Pump Assy, Column, Es (See Breakdown)	1
2	1028697	(000000-)	Sleeve, Rbr, 3.50b 3.58d 1.8l	1
3	1015033	(000000-)	Hose, Afmkt, Pvc, Brd 0.62id 01ft	1
4	63810	(000000-)	Clamp, Hose, Wormdrive, 0.56-1.06d, .56w	2
5	386652	(000000-)	Strainer, Soltn, 20 Mesh, Cyl 3.5d 9.5l	1
6	24543	(000000-)	Fitting, Plstc, E90, Bm12/Pf12	1
7	385685	(000000-)	Sensor, Level, Liq, 14vdc 01a .62-11	1
8	1019636	(000000-)	Bracket, Mtg, Strainer	1
9	09740	(000000-)	Screw, Hex, M8 X 1.25 X 20, Ss	6
10	1017218	(000000-)	Washer, Flat, 0.32b 1.00d .12, Ss	6
11	1022229	(000000-)	Tank, Detgt, Trimmed	1
12	1025159	(000000-)	Bracket, Mtg, Detgt And Spray Wand	1
13	20952	(000000-)	Screen, Pump	1
14	1014974	(000000-)	Hose, Afmkt, Pvc, Brd 0.38id 02ft	1
15	20944	(000000-)	Grommet, Pye, 0.37id, F/1.5h, .13 Matl	1
16	20951	(000000-)	Fitting, Plstc, E90, Bm06/Bm06	2
17	43844	(000000-)	Clamp, Hose, Wormdrive, 0.25-0.62d, .31w	2
18	41295	(000000-)	Hose, Pvc, Clr, 0.38id 0.56od 48.00l	1
19	1011885	(000000-)	Cap, Tank	1
20	1029497	(000000-)	Switch Assy, Press, 3.0, 19.5l Tube	1
21	32183	(000000-)	Fitting, Brs, E90, Pm02/Bm03	1
22	1031572	(000000-)	Hose, Afmkt, Vacuum, 0.16id 01ft	1
23	63810	(000000-)	Clamp, Hose, Wormdrive, 0.56-1.06d, .56w	2
24	1015047	(000000-)	Hose, Afmkt, Pvc, Brd 0.75id 02ft	1
25	10632-2	(000000-)	Grommet, Rbr, 0.62id, F/0.9h, .12 Matl	1
26	1039019	(000000-)	Filter, Soltn, 020mesh, Pm12 3.2d 08.0l	1
27	14877	(000000-)	Fitting, Plstc, E90, Bm12/Pm12	1

Fig. 3 - Side Brush Motor Group (000000-003076)

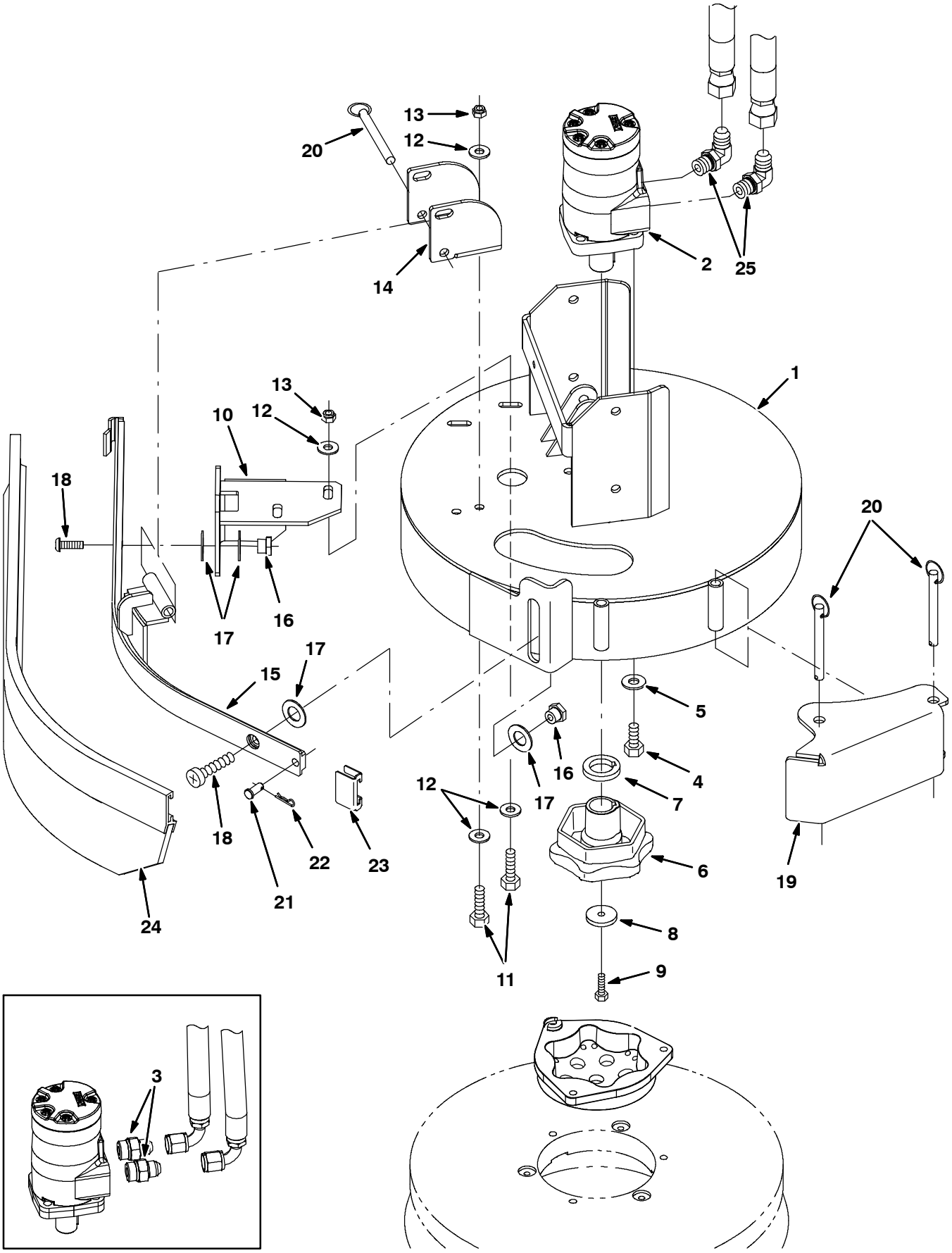

354463

Fig. 3 - Side Brush Motor Group (000000-003076)

Ref.	Part No.	Serial Number	Description	Qty.
1	1021794	(000000-003076)	Bracket Wldt, Mtg, Side Brush	1
2	1029379	(000000-003076)	Motor, Hyd, Gear, Int 08.9 Bi-Dir 2500 (See Breakdown)	1
3	56692	(000000-001337)	Fitting, Hyd, Str, Jm08/Om10	2
4	01762	(000000-003076)	Screw, Hex, .38-16 X 0.75, Nl	4
5	32492	(000000-003076)	Washer, Flat, 0.38 Std	4
6	1042968	(000000-003076)	Hub, Drive, Brush, Disk, 1.00b [6t]	1
7	25611	(000000-003076)	Spacer, Hub, Keyed	1
8	19191	(000000-003076)	Spacer	1
9	25046	(000000-003076)	Screw, Hex, .25-20 X 1.00, 5	1
10	1022135	(000000-003076)	Bracket, Mtg, Sqge	1
11	09010	(000000-003076)	Screw, Hex, M8 X 1.25 X 25, Ss	4
12	01685	(000000-003076)	Washer, Flat, 0.31, Ss	8
13	08713	(000000-003076)	Nut, Hex, Lock, M8 X 1.25, Nl, Ss	4
14	1022188	(000000-003076)	Bar, Retainer	1
15	1022111	(000000-003076)	Frame Wldt, Sqge, Side Brush	1
16	1022302	(000000-003076)	Nut, T, M8 X 1.25 X 14.5od X 9.5l	2
17	64425	(000000-003076)	Washer, Thrust, 0.61b 1.25d .06, Fgl	4
18	223470	(000000-003076)	Screw, Btn, M8 X 1.25 X 25, Ss	2
19	1022260	(000000-003076)	Bumper Wldt, Brush, Side	1
20	369359	(000000-003076)	Pin, Hitch, .375d X 3.12l, Pl	3
21	46800	(000000-003076)	Pin, Clevis, 0.31d X 0.75l	1
22	08179	(000000-003076)	Pin, Cotter, .094 X 1.00	1
23	86759	(000000-003076)	Retainer, Sqge	1
24	1025005	(000000-003076)	Squeegee Assy, Sba, Linatex	1
24	1027716	(000000-003076)	Squeegee Assy, Sba, Ure	1
25	56821	(001338-003076)	Fitting, Hyd, E90, Jm08/Om10	1

Fig. 4 - Side Brush Motor Group (003077-)

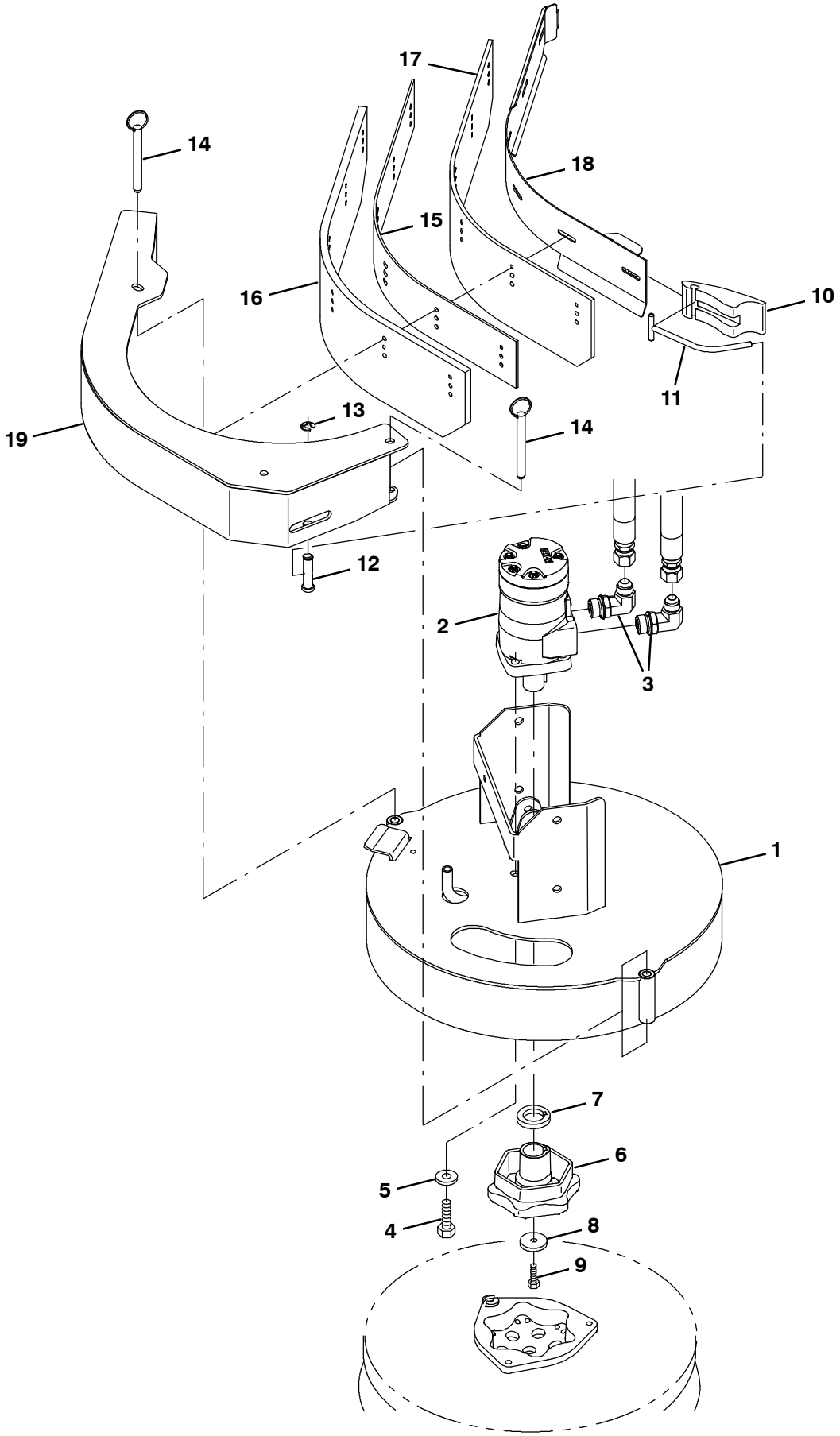

354463

Fig. 4 - Side Brush Motor Group (003077-)

Ref.	Part No.	Serial Number	Description	Qty.
1	1047002	(003077-)	Bracket Wldt, Mtg, Side Brush Fixed	1
2	1029379	(003077-)	Motor, Hyd, Gear, Int 08.9 Bi-Dir 2500 (See Breakdown)	1
3	56821	(003077-)	Fitting, Hyd, E90, Jm08/Om10	2
4	01762	(003077-)	Screw, Hex, .38-16 X 0.75, Nl	4
5	32492	(003077-)	Washer, Flat, 0.38 Std	4
6	1042968	(003077-)	Hub, Drive, Brush, Disk, 1.00b [6t]	1
7	25611	(003077-)	Spacer, Hub, Keyed	1
8	19191	(003077-)	Spacer	1
9	25046	(003077-)	Screw, Hex, .25-20 X 1.00, 5	1
10	21601	(003077-)	Cam, Front	1
11	386298	(003077-)	Pin Wldt, Front	1
12	21603	(003077-)	Pin, Grvd, 0.43d 01.8l [303ss]	1
13	24555	(003077-)	Ring, Retaining, Ext, 0.38d, [E-Ring]	1
14	369359	(003077-)	Pin, Hitch, .375d X 3.12l, Pl	2
15	1046995	(003077-)	Spacer, Sqge, Side Brush, Rbr	1
16	1046980	(003077-)	Blade, Sqge, Side Brush, Linatex	1
16	1059091	(003077-)	Blade, Sqge, Side Brush, Urethane	1
17	1047238	(003077-)	Blade, Sqge, Side Brush, Linatex	1
17	1059092	(003077-)	Blade, Sqge, Side Brush, Urethane	1
18	1047060	(003077-)	Plate Wldt, Retainer, Sqge	1
19	1046976	(003077-)	Bumper Wldt, Brush, Side	1

Fig. 5 - Side Brush Lift Group

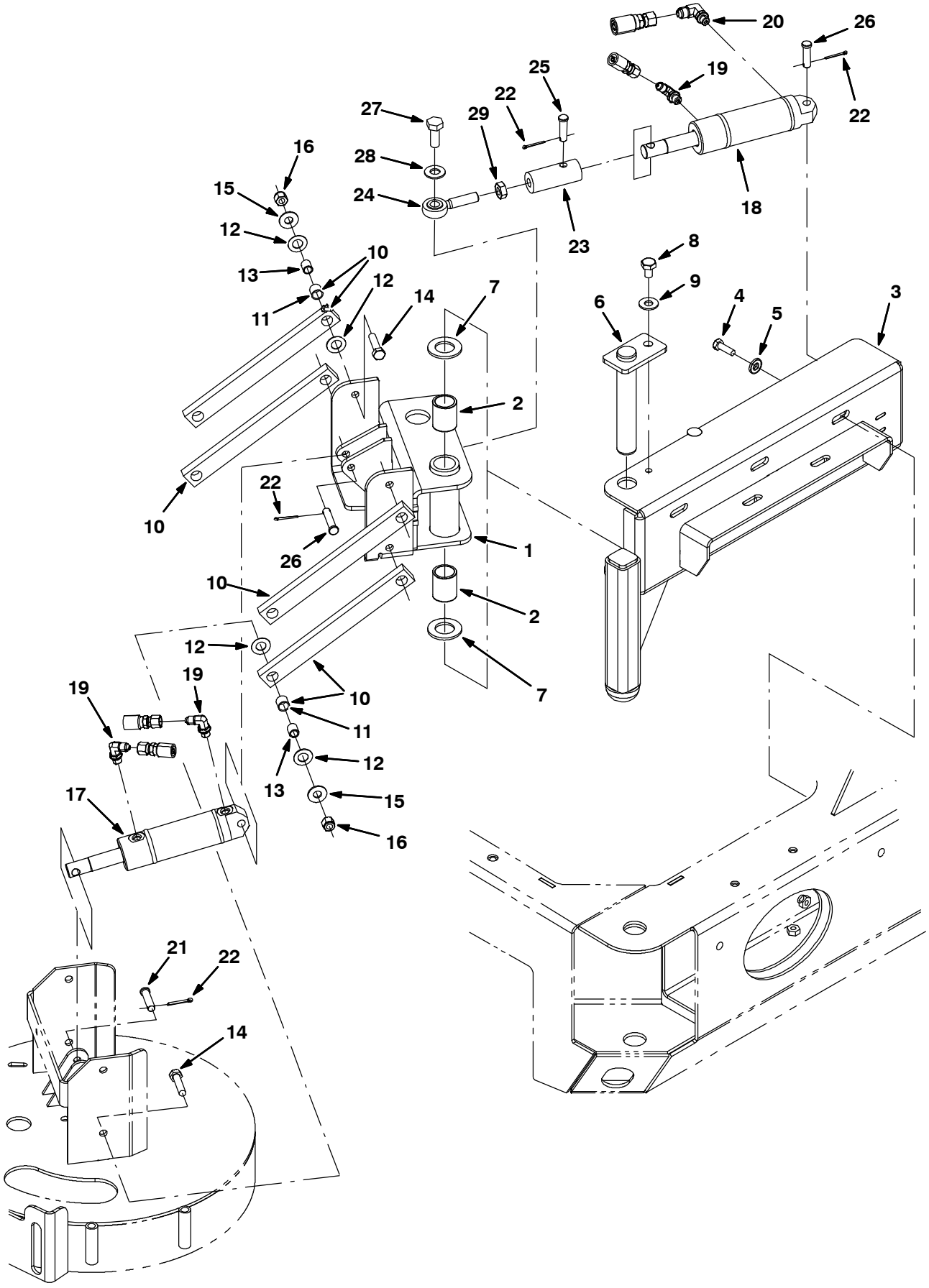

354464

Fig. 5 - Side Brush Lift Group

	Ref.	Part No.	Serial Number	Description	Qty.
	1	1021439	(000000-)	Pivot Wldt, Brush, Side	1
	2	71868	(000000-)	Bushing, Sleeve, 1.00b 1.13d 1.50l, Fgl	2
	3	1021473	(000000-)	Channel Wldt, Pivot	1
	4	09010	(000000-)	Screw, Hex, M8 X 1.25 X 25, Ss	5
	5	41186	(000000-)	Washer, Flat, Belleville, .31	5
	6	1021617	(000000-)	Pin Wldt	1
	7	71869	(000000-)	Washer, Thrust, 1.00b 1.75d 0.13w, Fbr	2
	8	16735	(000000-)	Screw, Hex, M8 X 1.25 X 16, 8.8	1
	9	32491	(000000-)	Washer, Flat, 0.31, Std	1
▽	10	63175-1	(000000-)	Arm, Link	4
▲	11	63233	(000000-)	Bushing, Sleeve, 0.50b 0.59d 0.50l, Bnz	2
	12	59633	(000000-)	Bearing, Thrust, 0.53b 1.00d 0.03w	16
	13	1027926	(000000-)	Sleeve, P/M, 0.37b 0.50d 0.6l [430ss]	8
	14	36845	(000000-)	Screw, Hex, .38-16 X 1.50, Ss	8
	15	01685	(000000-)	Washer, Flat, 0.31, Ss	8
	16	59156	(000000-)	Nut, Hex, Lock, .38-16, Nl, Ss	8
	17	1038137	(000000-)	Cylinder, Hyd, 1.5b 07.8l 02.80strk 2500	1
	18	1038115	(000000-)	Cylinder, Hyd, 1.5b 07.8l 02.75strk 2500	1
	19	77097	(000000-)	Fitting, Hyd, E90, Jm04/Om04	3
	20	77098	(000000-)	Fitting, Hyd, E90, Jm06/Om04	1
	21	29558	(000000-)	Pin, Clevis, 0.37d X 1.50l	1
	22	08179	(000000-)	Pin, Cotter, .094 X 1.00	4
	23	1021564	(000000-)	Adapter, Rod-End, Side Brush	1
	24	71874	(000000-)	Rod-End, .50-20rh Mal 0.50b	1
	25	29557	(000000-)	Pin, Clevis, 0.37d X 1.31l	1
	26	17461	(000000-)	Pin, Clevis, 0.37d X 1.75l	2
	27	41346	(000000-)	Screw, Hex, M12 X 1.75 X 30, 8.8	1
	28	32486	(000000-)	Washer, Flat, 0.50 Sae	1
	29	48985	(000000-)	Nut, Hex, Jam, .50-20	1

Fig. 6 - Side Brush Solution Control Group

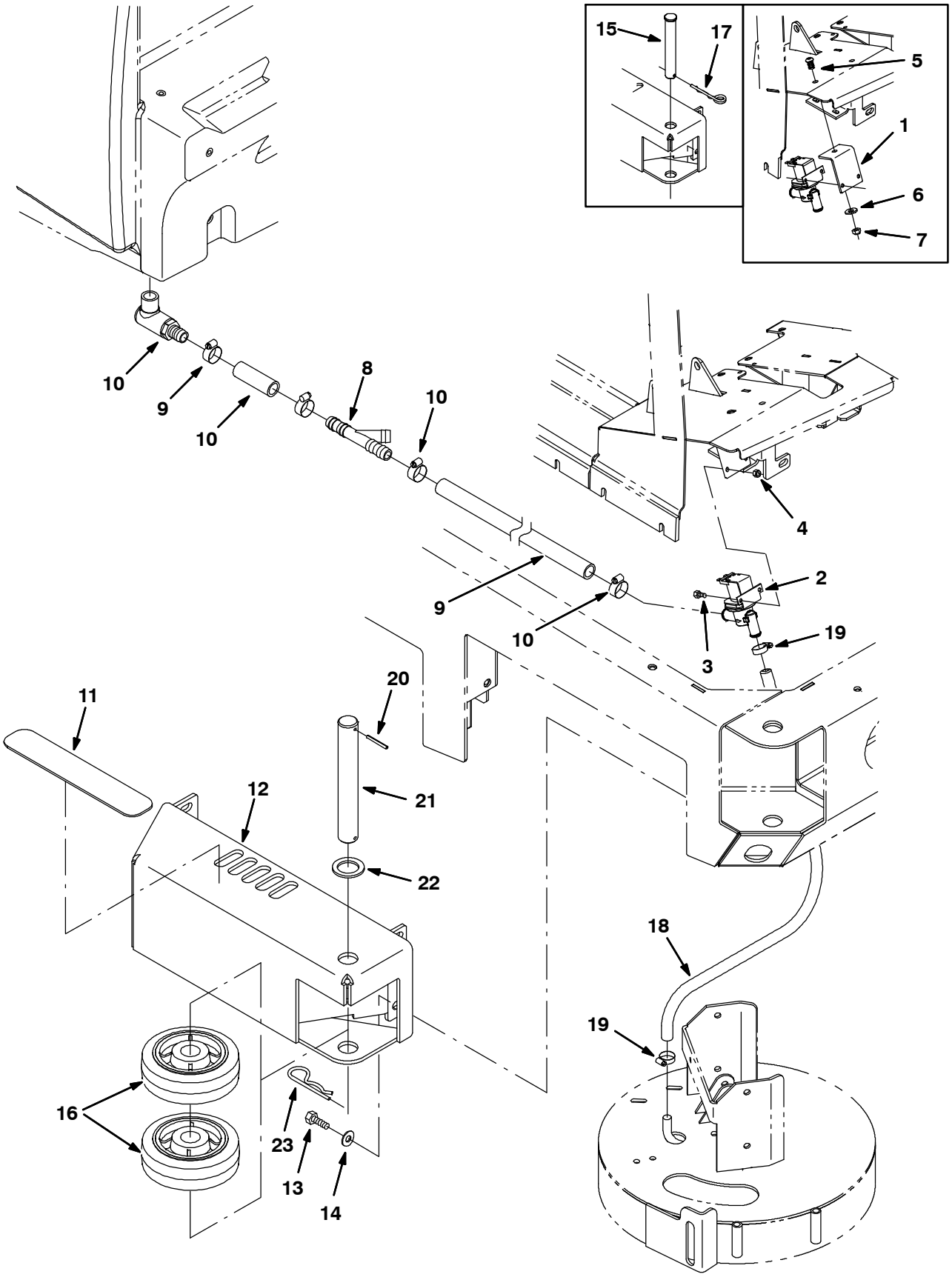

354465

Fig. 6 - Side Brush Solution Control Group

Ref.	Part No.	Serial Number	Description	Qty.
1	1040834	(000000-002241)	Angle, Mtg, Valve	1
2	1022106	(000000-)	Valve Assy, Water, Solenoid, 12vdc	1
3	09738	(000000-)	Screw, Hex, M5 X 0.8 X 12, Ss	2
4	09739	(000000-)	Nut, Hex, Lock, M5 X 0.8, Nl, Ss	2
5	17284	(000000-002241)	Screw, Btn, M8 X 1.25 X 16, Ss	1
6	32491	(000000-002241)	Washer, Flat, 0.31, Std	1
7	08713	(000000-002241)	Nut, Hex, Lock, M8 X 1.25, Nl, Ss	1
8	393255	(000000-)	Fitting, Plstc, Tee, Bm12/Bm12/Bm12	1
9	1015045	(000000-)	Hose, Afmkt, Pvc, Brd 0.75id 08ft	1
10	63810	(000000-)	Clamp, Hose, Wormdrive, 0.56-1.06d, .56w	4
11	82839	(000000-)	Tread, Non-Skid, 02.2w 11.5l	1
12	1022318	(000000-)	Guard Wldt, Brush, Side	1
13	12317	(000000-)	Screw, Hex, M10 X 1.5 X 30, Ss	4
14	01686	(000000-)	Washer, Flat, 0.44b 1.00d .08, Ss	4
15	9006334	(000000-003062)	Pin Kit, Wheel, Ci [M20/T20/M30]	1
16	1060130	(000000-)	Wheel, 06.0D 2.00W 1.19B, Gray Rbr	2
17	761490	(000000-003062)	Pin, Cotter, Hair, Dbl	1
18	50178	(000000-)	Hose, Pvc, Clr, 0.50id 0.69od 26.00l	1
19	54333	(000000-)	Clamp, Hose, Wormdrive, 0.31-0.88d, .31w	2
20	23146	(003063-)	Pin, Roll, .187d X 1.62l, .187/.192	1
21	1053838	(003063-)	Pin, 30mmd X 215mml	1
22	47719	(003063-)	Washer, Flat, 1.26b 1.88d .13, Stl	1
23	34411	(003063-)	Pin, Cotter, Hair, 1.00d .178 Wir	1

Fig. 7 - Side Brush Hydraulic Valve Group

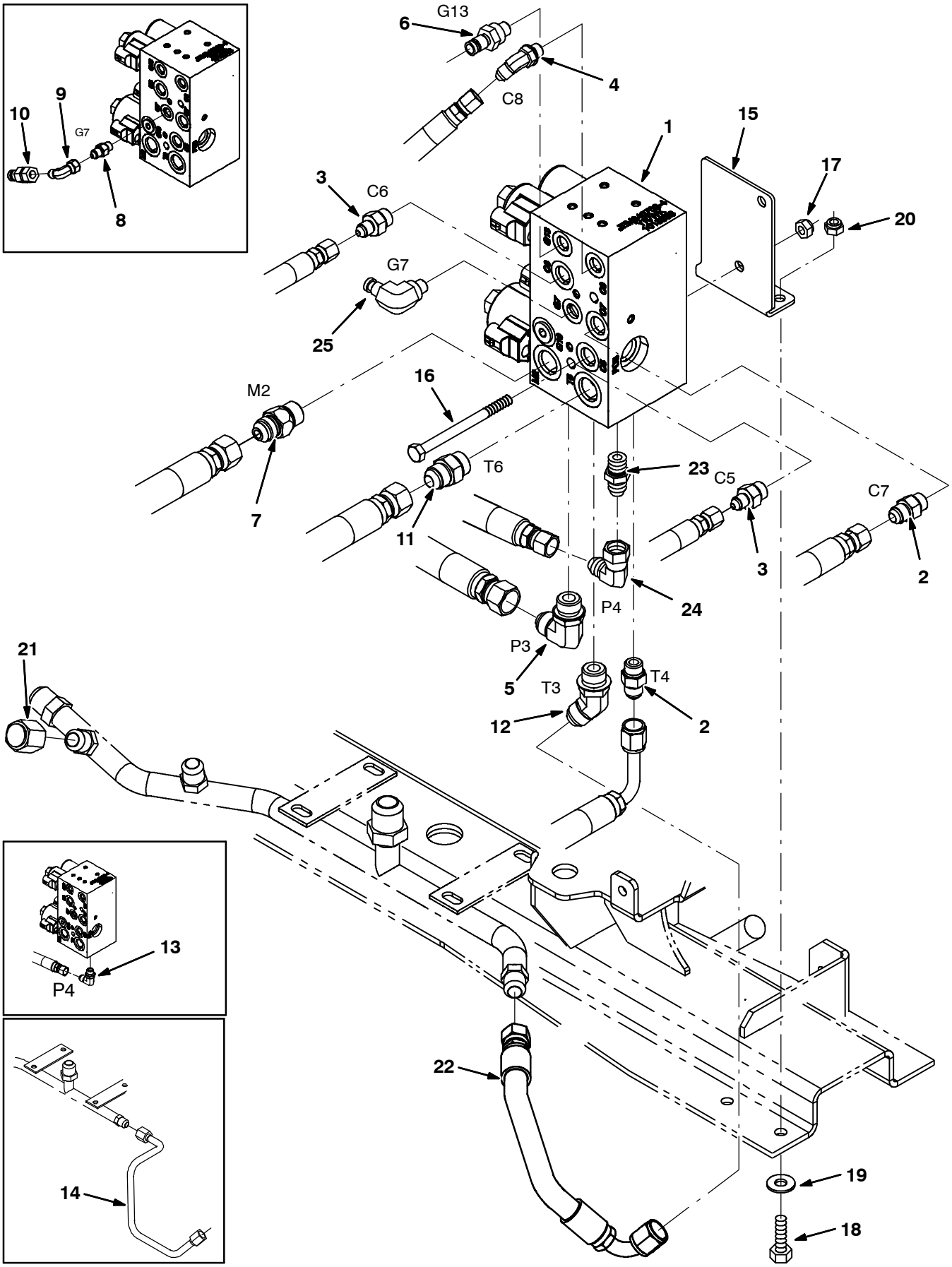

354466

Fig. 7 - Side Brush Hydraulic Valve Group

Ref.	Part No.	Serial Number	Description	Qty.
1	1018938	(000000-002015)	Valve, Cntrl, Hyd [M20 And T20] (See Breakdown)	1
1	1037805	(002016-)	Valve, Hyd, Solenoid 12vdc 3000psi (See Breakdown)	1
2	56690	(000000-)	Fitting, Hyd, Str, Jm06/Om06	2
3	55685	(000000-)	Fitting, Hyd, Str, Jm04/Om06	2
4	34359	(000000-)	Fitting, Hyd, E45, Jm04/Om04	1
5	44868	(000000-)	Fitting, Hyd, E90, Jm08/Om08	1
6	395973	(000000-)	Fitting, Hyd, Str, Om04/Qm04	1
7	1026119	(000000-)	Valve, Hyd, Check, Jm08/Om08 5000psi	1
8	55586	(000000-002951)	Fitting, Hyd, Str, Jm04/Om04	1
9	39210	(000000-002951)	Fitting, Hyd, E90, Jf04/Jm04	1
10	396476	(000000-002951)	Fitting, Hyd, Str, Jf04/Qm04	1
11	44869	(000000-)	Fitting, Hyd, Str, Jm08/Om08	1
12	42226	(000000-)	Fitting, Hyd, E45, Jm08/Om08	1
13	56820	(000000-002015)	Fitting, Hyd, E90, Jm06/Om06	1
14	1025405	(000000-001357)	Tube, Hyd, 08 Jf08/Jf08	1
15	1045272	(000000-)	Bracket, Valve, Sba [M20 And T20]	1
16	364441	(000000-)	Screw, Hex, M8 X 1.25 X 110, Ss	2
17	08709	(000000-)	Nut, Hex, Lock, M8 X 1.25, Nl	2
18	09010	(000000-)	Screw, Hex, M8 X 1.25 X 25, Ss	2
19	32491	(000000-)	Washer, Flat, 0.31, Std	2
20	08713	(000000-)	Nut, Hex, Lock, M8 X 1.25, Nl, Ss	2
21	60090	(000000-)	Fitting, Hyd, Cap, Jf08	1
22	1037011	(001358-)	Hose, Hyd, Tc08, Jf08str/Jf08e90, 012.0	1
23	56690	(002016-)	Fitting, Hyd, Str, Jm06/Om06	1
24	47504	(002016-)	Fitting, Hyd, E90, Jf06/Jm06	1
25	395974	(002952-)	Fitting, Hyd, E90, Om04/Qm04	1

Fig. 8 - Side Brush Hydraulic Hose Group

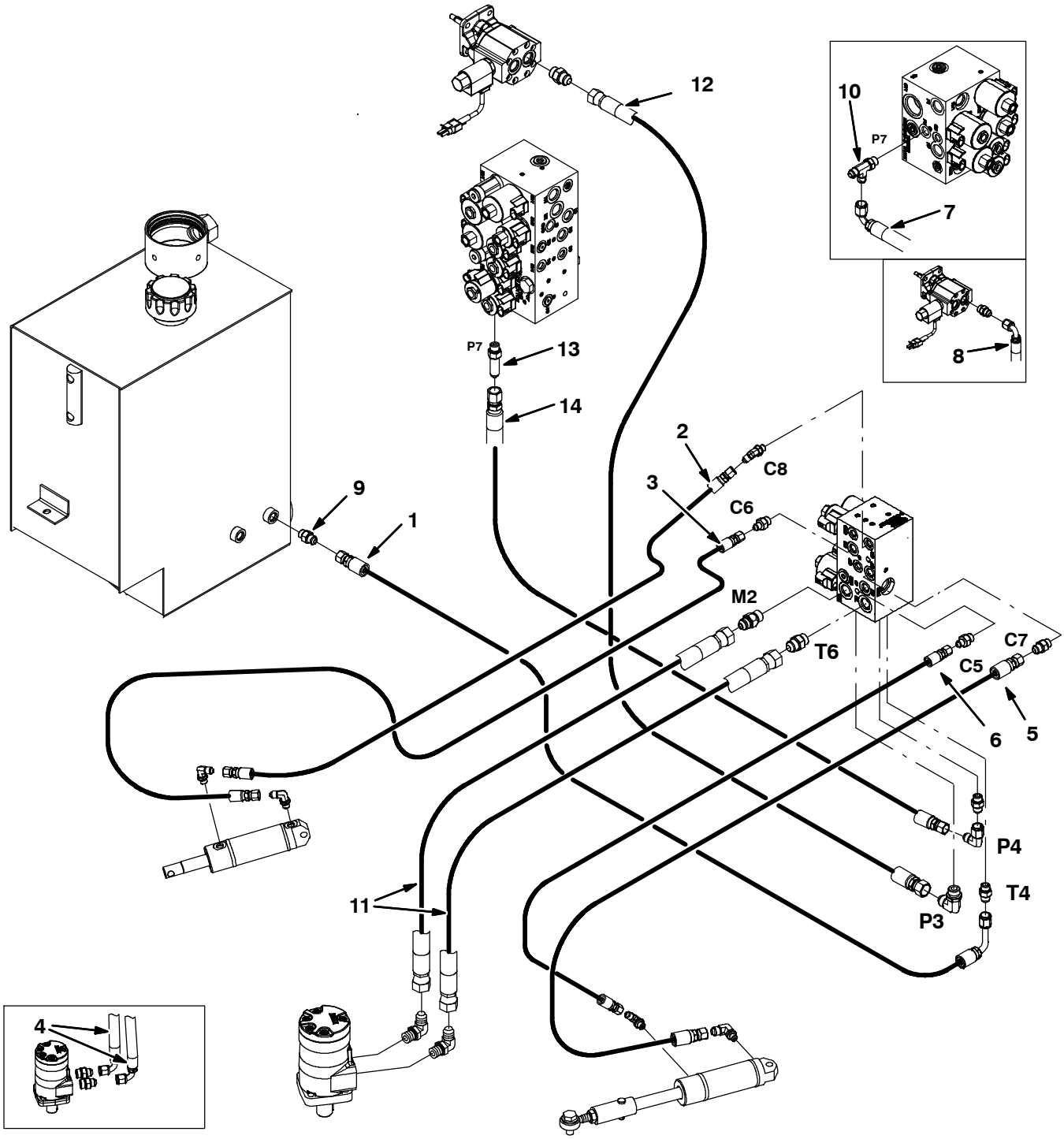

354467

Fig. 8 - Side Brush Hydraulic Hose Group

Ref.	Part No.	Serial Number	Description	Qty.
1	361047	(000000-)	Hose, Hyd, Med06, Jf06e90l/Jf06str,038.0	1
2	1023485	(000000-)	Hose, Hyd, Tc06, Jf06str/Jf06str, 033.0	1
3	1025990	(000000-)	Hose, Hyd, Tc04, Jf04str /Jf04str, 39.0	1
4	1023486	(000000-001337)	Hose, Hyd, Tc08, Jf08e90/Jf08str, 034.0	2
5	1025991	(000000-)	Hose, Hyd, Tc06, Jf06str /Jf06str, 23.0	1
6	1025992	(000000-)	Hose, Hyd, Tc04, Jf04str /Jf04str, 20.0	1
7	1025445	(000000-026999)	Hose, Hyd, Tc06, Jf06str /Jf06e90, 74.0	1
8	365004	(000000-001337)	Hose, Hyd, Tc08, Jf08e90/Jf08str, 056.0	1
9	56690	(000000-)	Fitting, Hyd, Str, Jm06/Om06	1
10	76316	(000000-026999)	Fitting, Hyd, Tee, Jm06/Jm06/Om06, Run	1
11	1036965	(001338-)	Hose, Hyd, Tc08, Jf08str/Jf08str, 034.0	1
12	1036944	(001338-)	Hose, Hyd, Tc08, Jf08str/Jf08str, 056.0	1
13	59577	(027000-)	Fitting, Hyd, Str, Jm06/Om06, Long	1
14	377236	(027000-)	Hose, Hyd, Tc06, Jf06Str/Jf06Str, 062.0	1

Fig. 9 - Fast Solution Pump Group (000000-002532)

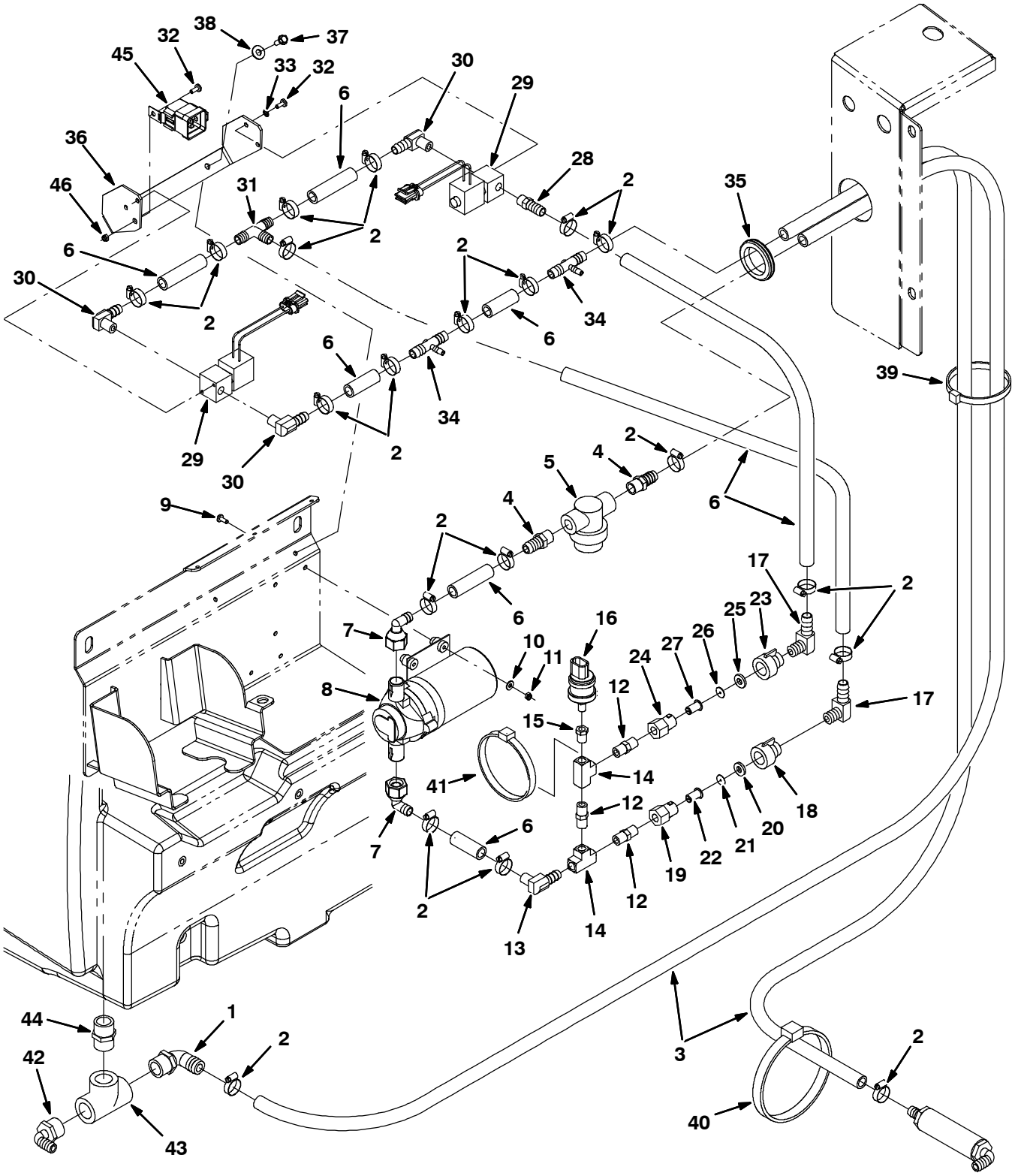

354468

Fig. 9 - Fast Solution Pump Group (000000-002532)

	Ref.	Part No.	Serial Number	Description	Qty.
	1	1005552	(000000-002532)	Fitting, Plstc, E90, Bm08/Pm12, Nyl	1
	2	54333	(000000-002532)	Clamp, Hose, Wormdrive, 0.31-0.88d, .31w	1
	3	1011412	(000000-002532)	Hose, Afmkt, Pvc, Brd 0.50id 08ft	1
	4	64743	(000000-002532)	Fitting, Plstc, Str, Bm08/Pm06	2
	5	1005302	(000000-002532)	Filter, In-Line, Pf06/Pf06, 80 Mesh	1
	6	1006401	(000000-002532)	Hose, Afmkt, Pvc, Brd 0.50id 03ft	1
	7	1018499	(000000-002532)	Fitting, Plstc, E90, Bm08/Pf08s, Swivel	2
	8	1030878	(000000-002532)	Pump, Soltn, Ele, 12vdc [W/O Chk Valve]	1
	9	17185	(000000-002532)	Screw, Pan, M5 X 0.8 X 40, Ss	4
	10	01683	(000000-002532)	Washer, Flat, #10, Ss	4
	11	09739	(000000-002532)	Nut, Hex, Lock, M5 X 0.8, Nl, Ss	4
	12	398468	(000000-002532)	Fitting, Brs, Str, Pm04/Pm04	3
	13	1010836	(000000-002532)	Fitting, Brs, E90, Bm08/Pm04	1
	14	398474	(000000-002532)	Fitting, Brs, Tee, Pf04/Pf04/Pf04	2
	15	150100	(000000-002532)	Fitting, Brs, Str, Pf02/Pm04	1
	16	1028582	(000000-002532)	Switch, Press, 10psi, Spst	1
	17	1010836	(000000-002532)	Fitting, Brs, E90, Bm08/Pm04	2
▽		1030864	(000000-002532)	Fitting Assy, Orifice, 0.070b, Pf04/Pf04	1
▲	18	1005506	(000000-002532)	Fitting, Plstc, Cap, Spray, Pf04	1
▲	19	1005507	(000000-002532)	Fitting, Plstc, Body, Spray, Pf04	1
▲	20	1005508	(000000-002532)	Washer, Flat, 0.34b 0.75d .12 [Viton]	1
▲	21	1018883	(000000-002532)	Plate, Orifice, 0.070id	1
▲	22	1006447	(000000-002532)	Vr, Filter, Screen, 50 Mesh .59d .8l Ss	1
▽		1030863	(000000-002532)	Fitting Assy, Orifice, 0.093b, Pf04/Pf04	1
▲	23	1005506	(000000-002532)	Fitting, Plstc, Cap, Spray, Pf04	1
▲	24	1005507	(000000-002532)	Fitting, Plstc, Body, Spray, Pf04	1
▲	25	1005508	(000000-002532)	Washer, Flat, 0.34b 0.75d .12 [Viton]	1
▲	26	1018884	(000000-002532)	Plate, Orifice, 0.093id	1
▲	27	1006447	(000000-002532)	Vr, Filter, Screen, 50 Mesh .59d .8l Ss	1
	28	762249	(000000-002532)	Fitting, Brs, Str, Bm08/Pm04	1
	29	1018098	(000000-002532)	Valve, Water, 12vdc, 6.0mm, 04pf	2
	30	1010836	(000000-002532)	Fitting, Brs, E90, Bm08/Pm04	3
	31	63245-1	(000000-002532)	Fitting, Plstc, Tee, Bm08/Bm08/Bm08	1
	32	09200	(000000-002532)	Screw, Pan, M5 X 0.8 X 12, Ss	5
	33	07514	(000000-002532)	Washer, Lock, Int, #10, Ss	4
	34	1010684	(000000-002532)	Fitting, Plstc, Tee, Bm04/Bm08/Bm08, Br	2
	35	10632-19	(000000-002532)	Grommet, Rbr, 2.13id, F/2.5h, .12 Matl	1
	36	1026074	(000000-002532)	Plate, Hsng [Fast]	1
	37	361339	(000000-002532)	Screw, Hex, M6 X 1.0 X 16, Fmg	4
	38	32490	(000000-002532)	Washer, Flat, 0.25 Std	4
	39	49266	(000000-002532)	Tie, Cable, Nyl, 07.3l .19w 1.8 Max D	1
	40	763116	(000000-002532)	Tie, Cable, Nyl, 15.3l . W 4.5 Max D	1
	41	763114	(000000-002532)	Tie, Cable, 11.3l, 2.75d Max	1
	42	14877	(000000-002532)	Fitting, Plstc, E90, Bm12/Pm12	1
	43	42133A	(000000-002532)	Fitting, Plstc, Tee, Pf12/Pf12/Pf12	1
	44	24544	(000000-002532)	Fitting, Plstc, Str, Pm12/Pm12 1.60l	1
	45	56186	(000000-002532)	Relay, 12vdc, 40a, Spdt N/O	1
	46	09739	(000000-002532)	Nut, Hex, Lock, M5 X 0.8, Nl, Ss	1

Fig. 10 - Fast Air Pump and Detergent Group (000000-002532)

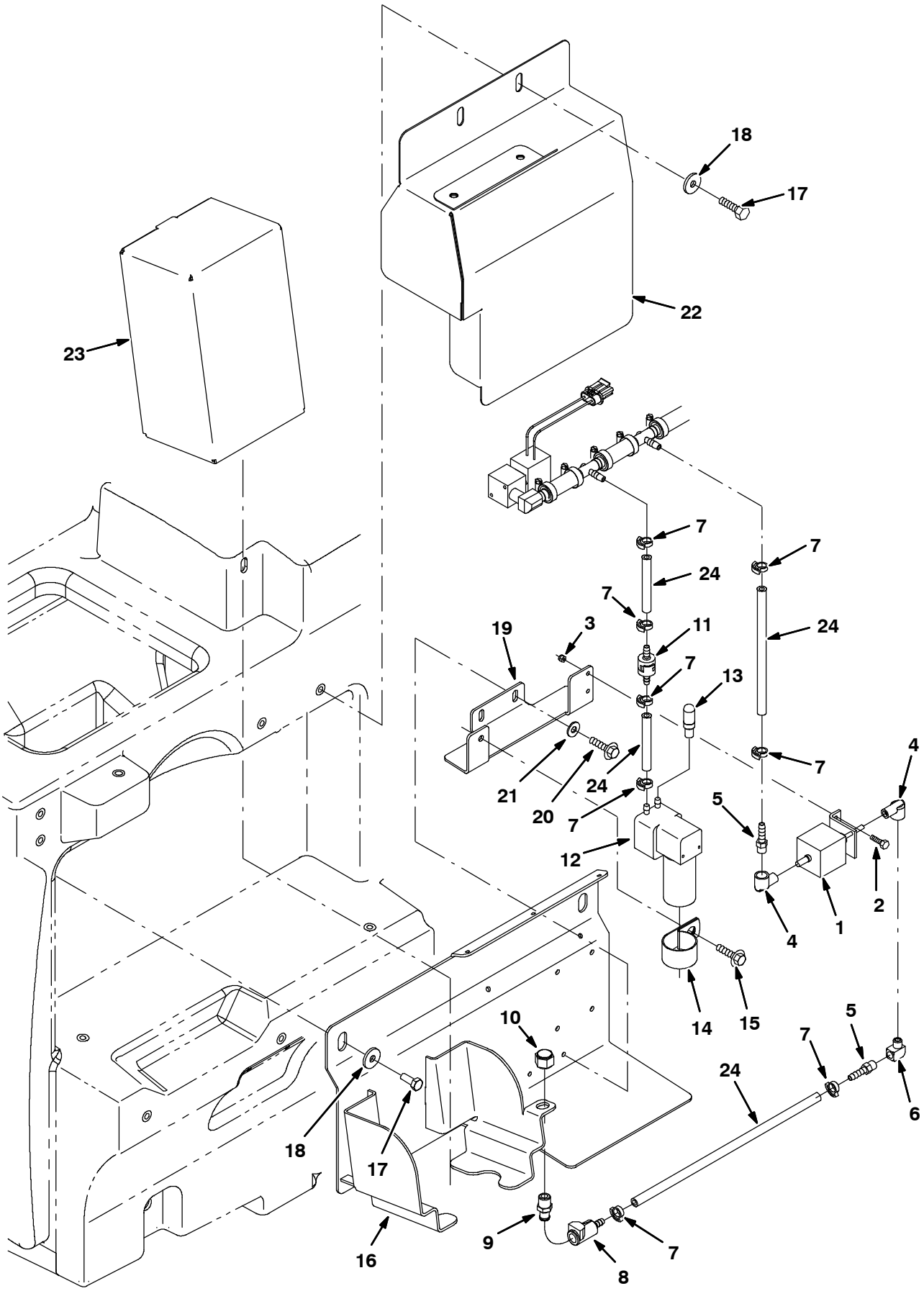

354469

Fig. 10 - Fast Air Pump and Detergent Group (000000-002532)

Ref.	Part No.	Serial Number	Description	Qty.
1	1018097	(000000-002532)	Pump, Detgt, 12vdc	1
2	09206	(000000-002532)	Screw, Hex, M4 X 0.7 X 12, 8.8	2
3	02850	(000000-002532)	Nut, Hex, Lock, M4 X 0.7, Nl	2
4	1014082	(000000-002532)	Fitting, Brs, E90, Cf03/Pf02	2
5	150525	(000000-002532)	Fitting, Brs, Str, Bm04/Pm02	2
6	11984	(000000-002532)	Fitting, Pipe, E90, Pf02/Pm02	1
7	1014575	(000000-002532)	Clamp, Hose, Plstc .351-.394 Id	8
8	1002898	(000000-002532)	Fitting, Plstc, Str, Bm04, Cplg, Fem	1
9	1002899	(000000-002532)	Fitting, Plstc, Str, Pm04, Cplg, Mal	1
10	1005435	(000000-002532)	Fitting, Plstc, Pipe, Cap, Pf04	1
11	1013902	(000000-002532)	Valve, Check, 0002psi Bm04/Bm04	1
12	1018780	(000000-002532)	Pump, Air, Ele, 12vdc	1
13	1005255	(000000-002532)	Filter Assy, Air, Mold, Ure	1
14	53466	(000000-002532)	Clamp, Cable, Stl, 1.50d X 1.00w, 1h	1
15	76099	(000000-002532)	Screw, Hex, M8 X 1.25 X 25, Fmg	1
16	1026067	(000000-002532)	Bracket Wldt, Mtg [Fast]	1
17	09740	(000000-002532)	Screw, Hex, M8 X 1.25 X 20, Ss	4
18	1017218	(000000-002532)	Washer, Flat, 0.32b 1.00d .12, Ss	4
19	1029118	(000000-002532)	Bracket, Mtg [Fast]	1
20	361339	(000000-002532)	Screw, Hex, M6 X 1.0 X 16, Fmg	2
21	32490	(000000-002532)	Washer, Flat, 0.25 Std	2
22	1033297	(000000-002532)	Cover Wldt [Fast]	1
23	1021878	(000000-002532)	Detergent Pkg, 4 Liter, Sgl [Tco 665]	1
24	1006415	(000000-002532)	Hose, Afmkt, Pvc, Clr 0.25id 03ft	1

Fig. 11 - Fast Foam Filter Group (000000-002532)

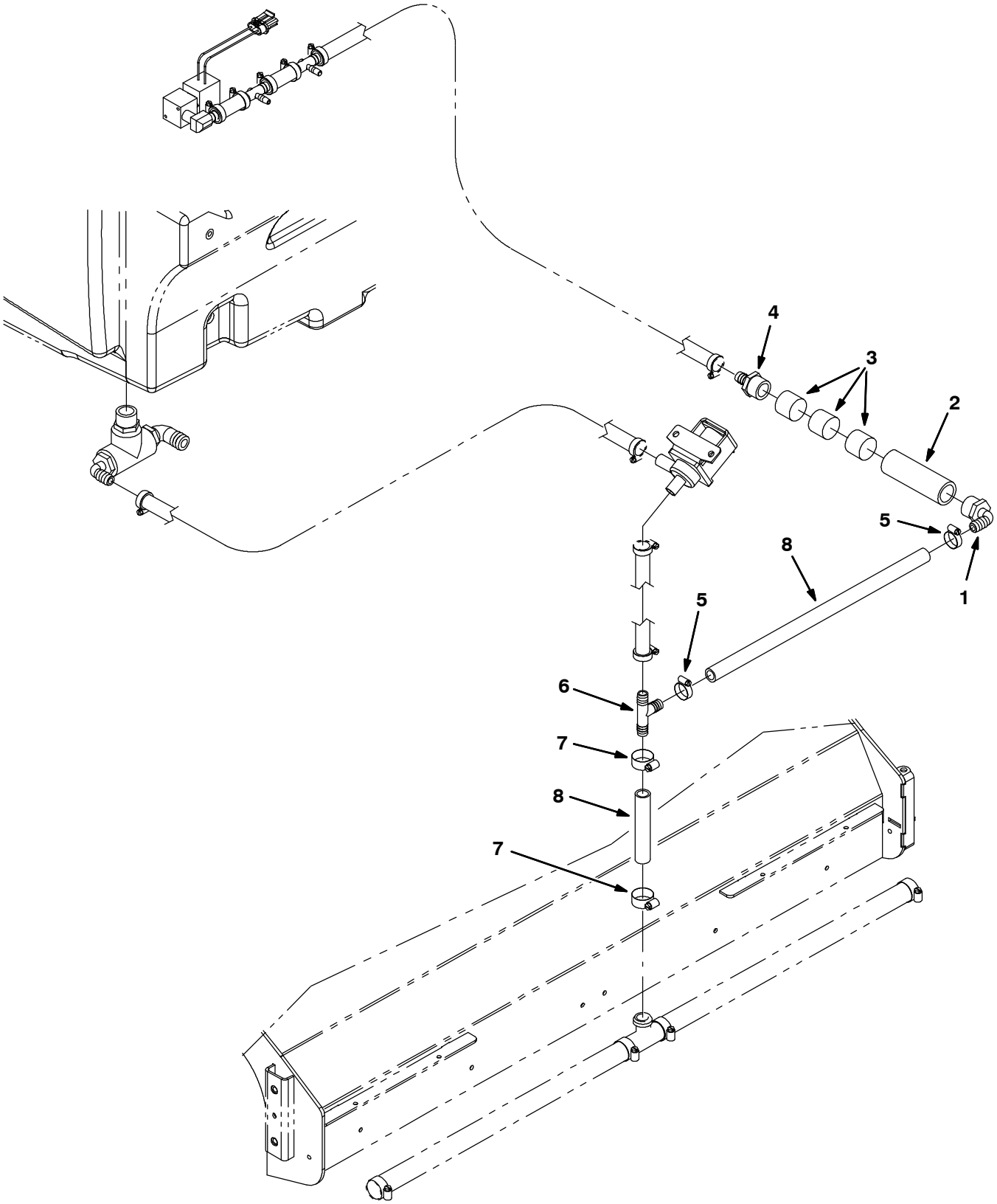

354470

Fig. 11 - Fast Foam Filter Group (000000-002532)

Ref.	Part No.	Serial Number	Description	Qty.
1	1005552	(000000-002532)	Fitting, Plstc, E90, Bm08/Pm12, Nyl	1
2	1005086	(000000-002532)	Tube, Pvc, Clr, 4.0l [Shc80]	1
3	1002789	(000000-002532)	Filter, Foam, Rbr, 1.20d, 1.0l	3
4	79273-1	(000000-002532)	Fitting, Plstc, Str, Bm08/Pm12	1
5	54333	(000000-002532)	Clamp, Hose, Wormdrive, 0.31-0.88d, .31w	2
6	385644	(000000-002532)	Fitting, Plstc, Tee, Bm08/Bm12/Bm12, Br	1
7	63810	(000000-002532)	Clamp, Hose, Wormdrive, 0.56-1.06d, .56w	2
8	1011521	(000000-002532)	Hose, Afmkt, Pvc, Brd 0.50id 02ft	1

Fig. 12 - Fast Foam Filter Group, Side Brush (000000-002532)

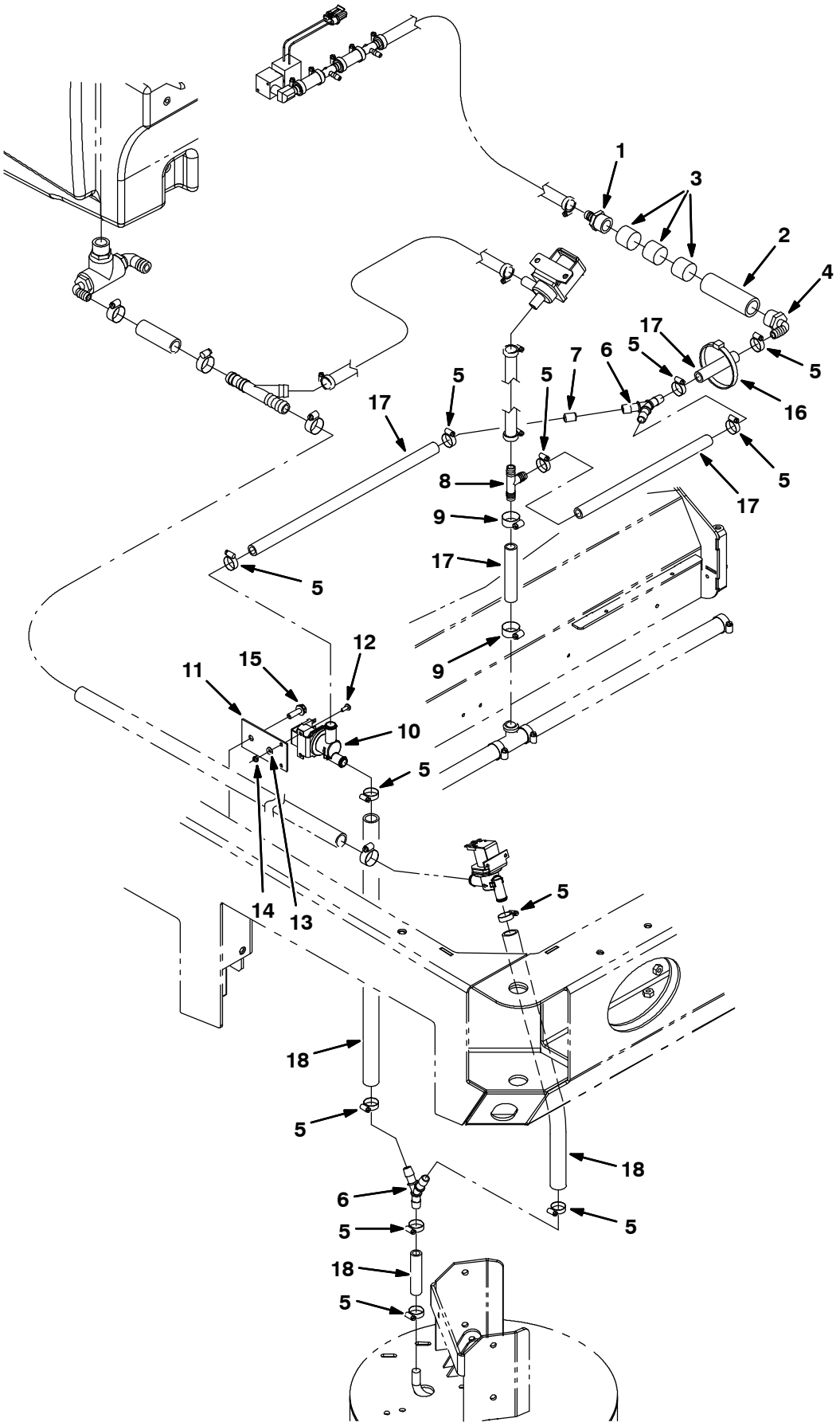

354471

Fig. 12 - Fast Foam Filter Group, Side Brush (000000-002532)

Ref.	Part No.	Serial Number	Description	Qty.
1	79273-1	(000000-002532)	Fitting, Plstc, Str, Bm08/Pm12	1
2	1005086	(000000-002532)	Tube, Pvc, Clr, 4.0l [Shc80]	1
3	1002789	(000000-002532)	Filter, Foam, Rbr, 1.20d, 1.0l	3
4	1005552	(000000-002532)	Fitting, Plstc, E90, Bm08/Pm12, Nyl	1
5	54333	(000000-002532)	Clamp, Hose, Wormdrive, 0.31-0.88d, .31w	10
6	1010668	(000000-002532)	Fitting, Plstc, Y, Bm08/Bm08/Bm08, Nyl	2
7	1018333	(000000-002532)	Fitting, Plstc, Rst, .50od /.13id	1
8	385644	(000000-002532)	Fitting, Plstc, Tee, Bm08/Bm12/Bm12, Br	1
9	63810	(000000-002532)	Clamp, Hose, Wormdrive, 0.56-1.06d, .56w	2
10	1037825	(000000-002532)	Valve, Solenoid, 12vdc, Water Flow	1
11	1030511	(000000-002532)	Plate, Mtg, Valve	11
12	09200	(000000-002532)	Screw, Pan, M5 X 0.8 X 12, Ss	2
13	01683	(000000-002532)	Washer, Flat, #10, Ss	2
14	09739	(000000-002532)	Nut, Hex, Lock, M5 X 0.8, Nl, Ss	2
15	76099	(000000-002532)	Screw, Hex, M8 X 1.25 X 25, Fmg	1
16	763116	(000000-002532)	Tie, Cable, Nyl, 15.3l . W 4.5 Max D	1
17	1011412	(000000-002532)	Hose, Afmkt, Pvc, Brd 0.50id 08ft	1
18	1015067	(000000-002532)	Hose, Afmkt, Pvc, Clr 0.50id 08ft	1

Fig. 13 - Fast Wire Harness Group (000000-002532)

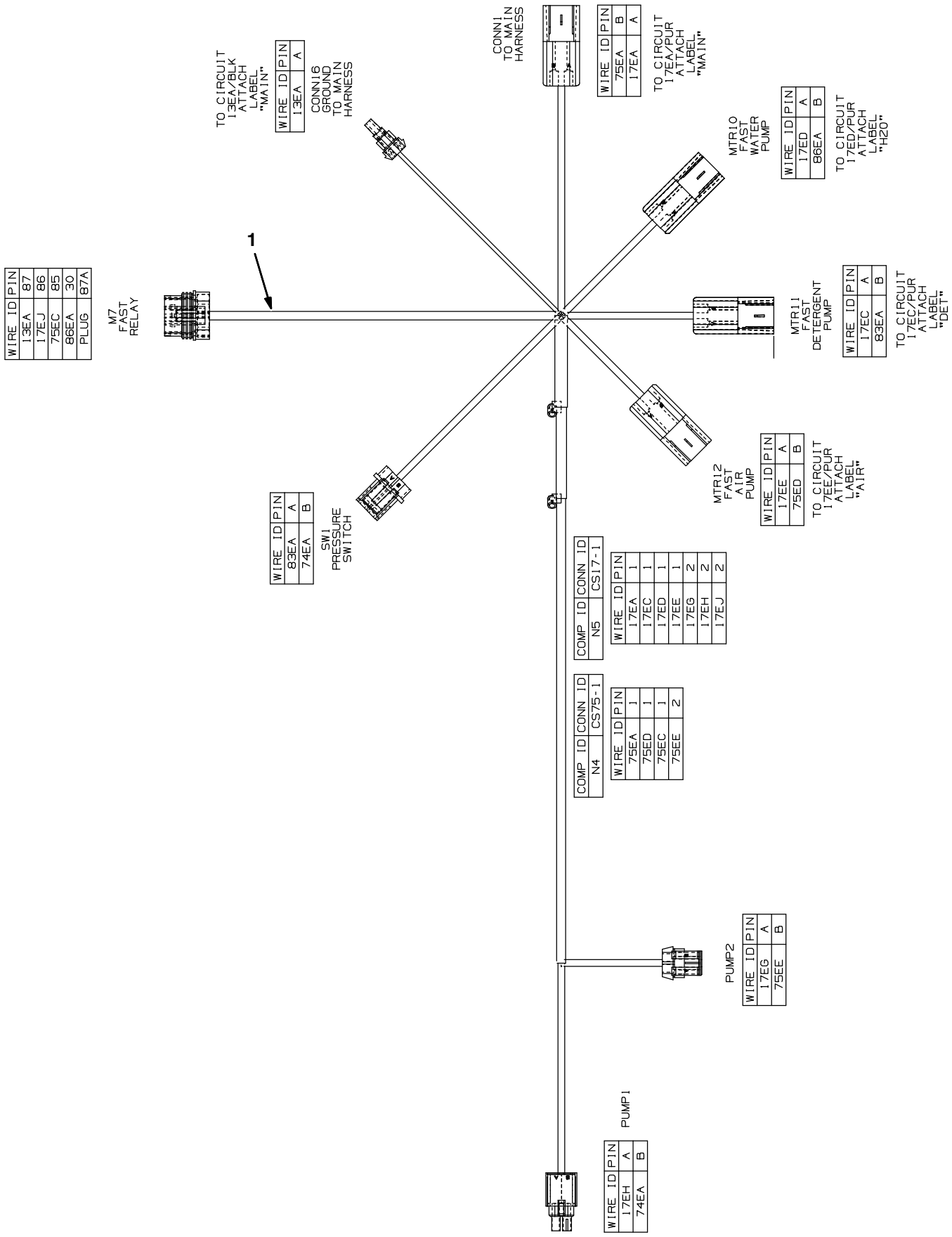

1019646-354472

Fig. 13 - Fast Wire Harness Group (000000-002532)

Ref.	Part No.	Serial Number	Description	Qty.
1	1019646	(000000-002532)	Harness [Fast, M20 And T20]	1

Fig. 14 - FaST Pumps and Detergent Group (002533-)

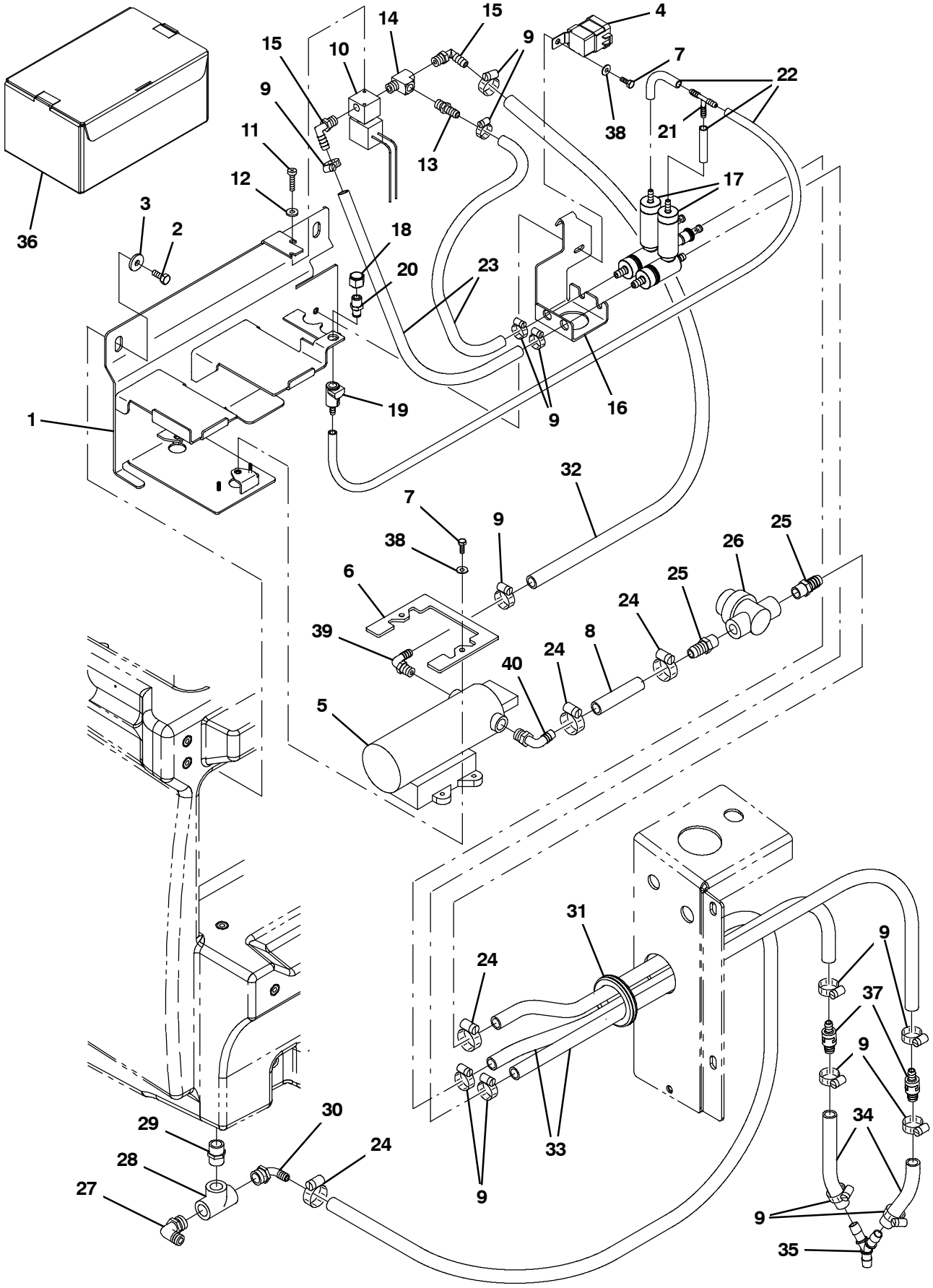

354789

Fig. 14 - FaST Pumps and Detergent Group (002533-)

Ref.	Part No.	Serial Number	Description	Qty.
1	1044342	(002533-)	Bracket Wldt, Mtg [Fast Gen 2+]	1
2	09740	(002533-)	Screw, Hex, M8 X 1.25 X 20, Ss	2
3	1017218	(002533-)	Washer, Flat, 0.32b 1.00d .12, Ss	2
4	56186	(002533-)	Relay, 12vdc, 040a, Spdt No	1
5	1036801	(002533-)	Pump, Soltn, 13.7vdc, 65psi [Fast Ii+]	1
6	1039357	(002533-)	Bracket, Retainer, Pump	1
7	15678	(002533-)	Screw, Hex, M6 X 1.00 X 16, Ss	3
8	1011403	(002533-)	Hose, Afmkt, Pvc, Brd, 0.50Id, 01Ft, Clr	1
9	43844	(002533-)	Clamp, Hose, Wormdrive, 0.25-0.62d, .31w	14
10	1018098	(002533-)	Valve, Water, Solenoid, 12vdc 6.0mm Pf04	1
11	09200	(002533-)	Screw, Pan, Phl, M5 X 0.80 X 12, Ss	2
12	01683	(002533-)	Washer, Flat, 10, Ss	2
13	150540	(002533-)	Fitting, Plstc, Str, Bm06/Pm04	1
14	150709	(002533-)	Fitting, Brs, Tee, Pm04/Pf04/Pf04, Run	1
15	57248	(002533-)	Fitting, Plstc, E90, Bm06/Pm04, Nyl	2
16	1044343	(002533-)	Bracket, Mtg [Fast Gen 2+]	1
17	9004515	(002533-)	Fast Kit, Injector, Ci[M20/M30 FaST II+]	2
18	1005435	(002533-)	Fitting, Plstc, Pipe, Cap, Pf04	1
19	1002898	(002533-)	Fitting, Plstc, Str, Bm04, Cplg, Fem	1
20	1002899	(002533-)	Fitting, Plstc, Str, Pm04, Cplg, Mal	2
21	150713	(002533-)	Fitting, Plstc, Tee, Bm04/Bm04/Bm04	1
22	1014986	(002533-)	Hose, Afmkt, Pvc, Clr, 0.25id, 02ft	1
23	1006416	(002533-)	Hose, Afmkt, Pvc, Clr, 0.38id, 03ft	1
24	54333	(002533-)	Clamp, Hose, Wormdrive, 0.31-0.88d, .31w	8
25	150538	(002533-)	Fitting, Plstc, Str, Bm06/Pm06	2
26	1005302	(002533-)	Filter, In-Line, Pf06/Pf06 080mesh 02.6l	1
27	14877	(002533-)	Fitting, Plstc, E90, Bm12/Pm12	1
28	42133A	(002533-)	Fitting, Plstc, Tee, Pf12/Pf12/Pf12	1
29	24544	(002533-)	Fitting, Plstc, Str, Pm12/Pm12 1.60l	1
30	1005552	(002533-)	Fitting, Plstc, E90, Bm08/Pm12, Nyl	1
31	10632-19	(002533-)	Grommet, Rbr, 2.13id, F/2.5h, .12 Matl	1
32	1006400	(002533-)	Hose, Afmkt, Pvc, Brd, 0.38id, 03ft, Clr	1
33	1024237	(002533-)	Hose, Afmkt, Pvc, Wir, 0.50id, 03ft, Clr	1
34	1014929	(002533-)	Hose, Afmkt, Pvc, Clr, 0.38id, 01ft	1
35	1010668	(002533-)	Fitting, Plstc, Y, Bm08/Bm08/Bm08, Nyl	1
36	1021878	(002533-)	Fast 665 4 Ltr, Detergent	1
37	1035794	(002533-)	Valve, Check, 0005psi Bm06/Bm08	2
38	01684	(002533-)	Washer, Flat, 0.27B 0.69D .05, Ss	3
39	1049254	(002533-)	Fitting, Nyl, Qdc, E90, Bm08/ Qm10	1
40	1049259	(002533-)	Fitting, NylY, Qdc, E90, Bm06/ Qm10	1

Fig. 15 - FaST Solution Supply Group (002533-)

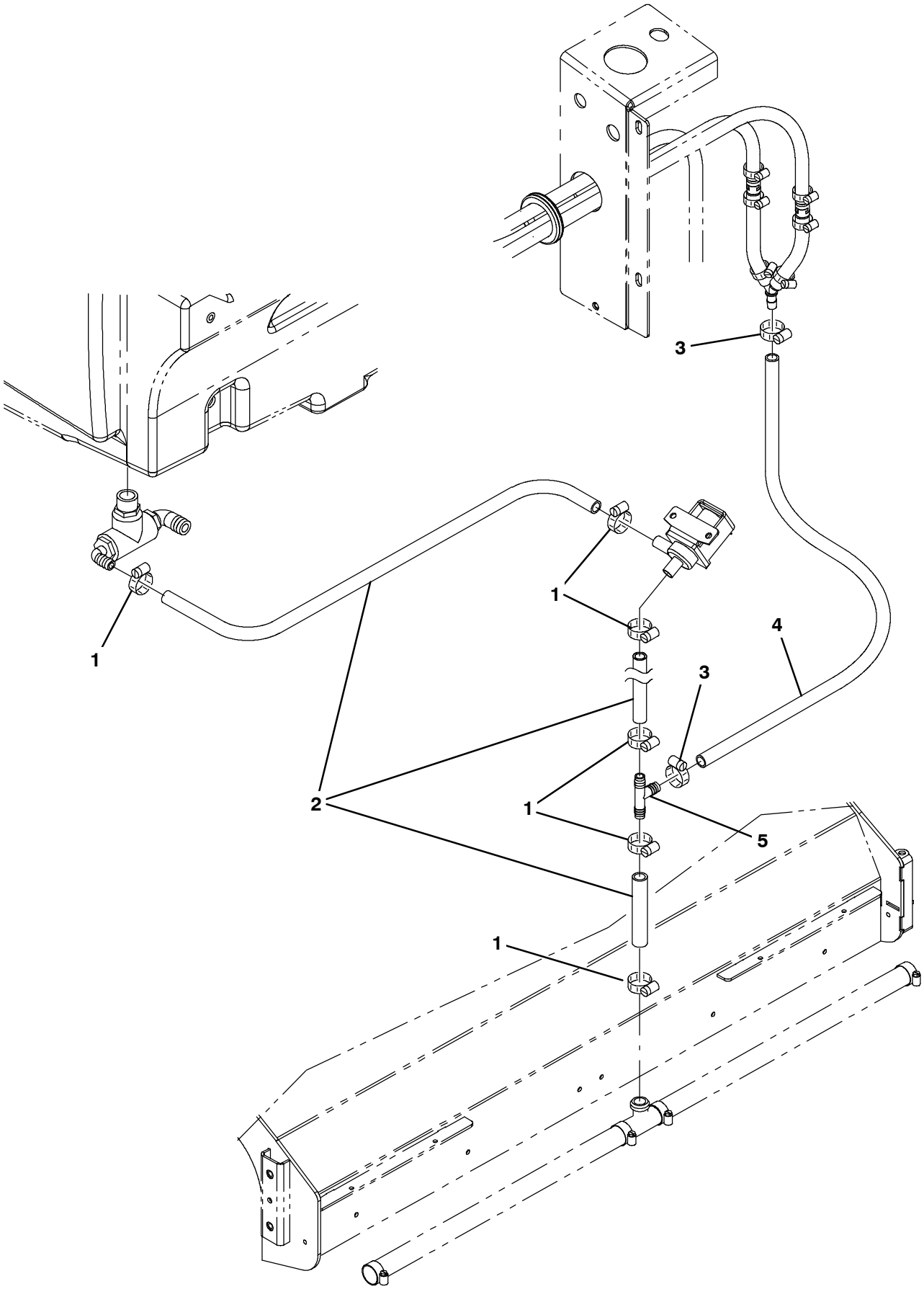

354791

Fig. 15 - FaST Solution Supply Group (002533-)

Ref.	Part No.	Serial Number	Description	Qty.
1	63810	(002533-)	Clamp, Hose, Wormdrive, 0.56-1.06d, .56w	6
2	1015045	(002533-)	Hose, Afmkt, Pvc, Brd, 0.75id, 08ft, Clr	1
3	54333	(002533-)	Clamp, Hose, Wormdrive, 0.31-0.88d, .31w	2
4	1011412	(002533-)	Hose, Afmkt, Pvc, Brd, 0.50id, 08ft, Clr	1
5	385644	(002533-)	Fitting, Plstc, Tee, Bm08/Bm12/Bm12, Br	1

Fig. 16 - FaST Solution Supply Group with Side Brush (002533-)

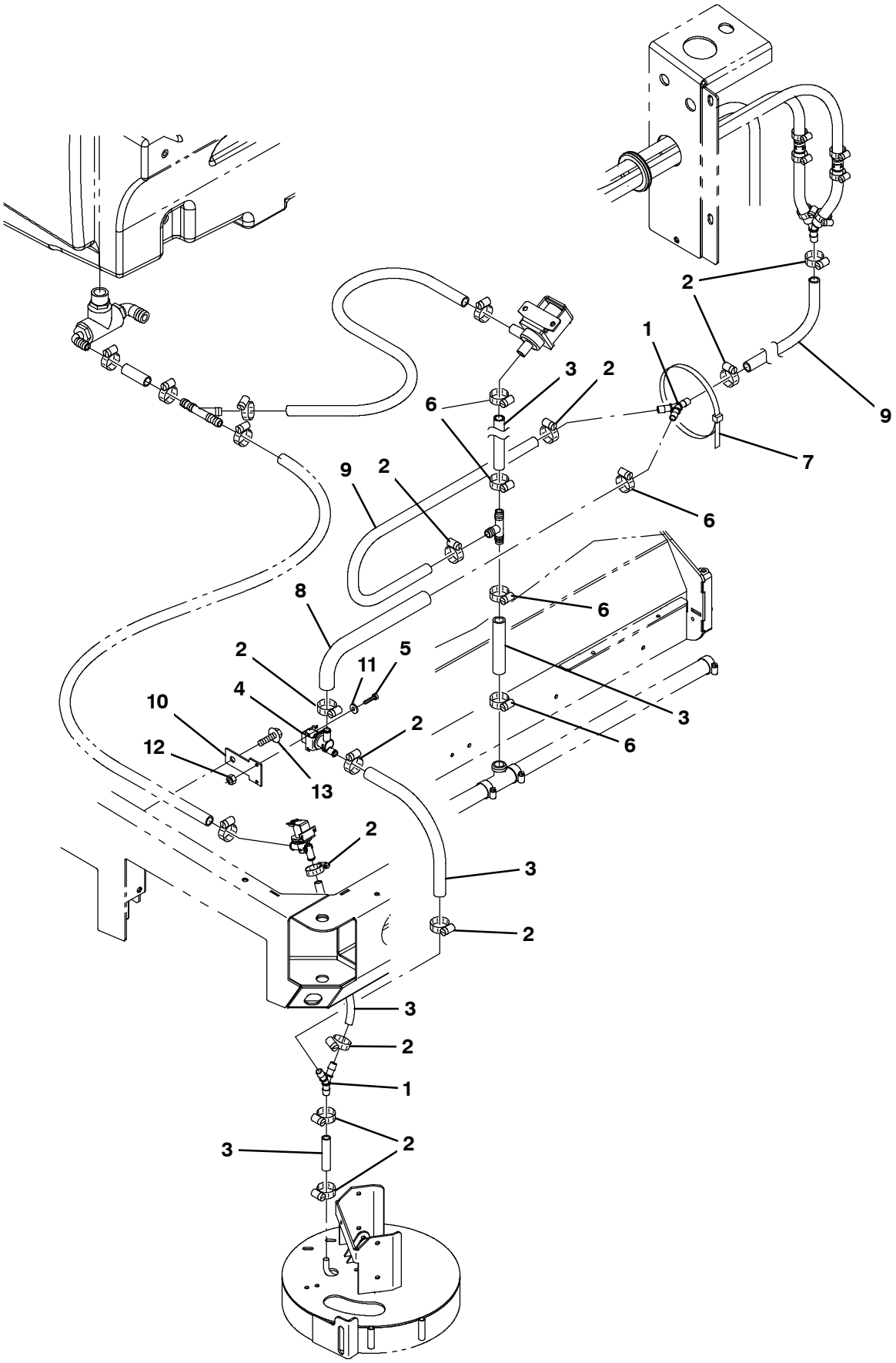

354792

Fig. 16 - FaST Solution Supply Group with Side Brush (002533-)

Ref.	Part No.	Serial Number	Description	Qty.
1	1010668	(002533-)	Fitting, Plstc, Y, Bm08/Bm08/Bm08, Nyl	2
2	54333	(002533-)	Clamp, Hose, Wormdrive, 0.31-0.88d, .31w	11
3	1015067	(002533-)	Hose, Afmkt, Pvc, Clr, 0.50id, 08ft	1
4	1037825	(002533-)	Valve, Solenoid, 12vdc, Water Flow	1
5	09200	(002533-)	Screw, Pan, Phl, M5 X 0.80 X 12, Ss	2
6	63810	(002533-)	Clamp, Hose, Wormdrive, 0.56-1.06d, .56w	5
7	763116	(002533-)	Tie, Cable, Nyl, 15.3l . W 4.5 Max D	1
8	31543	(002533-)	Hose, Heater, E90, 0.62id, 24.0 4.0	1
9	1011412	(002533-)	Hose, Afmkt, Pvc, Brd, 0.50id, 08ft, Clr	1
10	1030511	(002533-)	Plate, Mtg, Valve	1
11	01683	(002533-)	Washer, Flat, 10, Ss	2
12	09739	(002533-)	Nut, Hex, Lock, M5 X 0.80, Nl, Ss	2
13	76099	(002533-)	Screw, Hex, M8 X 1.25 X 25, Fmg	1

Fig. 17 - Fast Wire Harness Group (002533-)

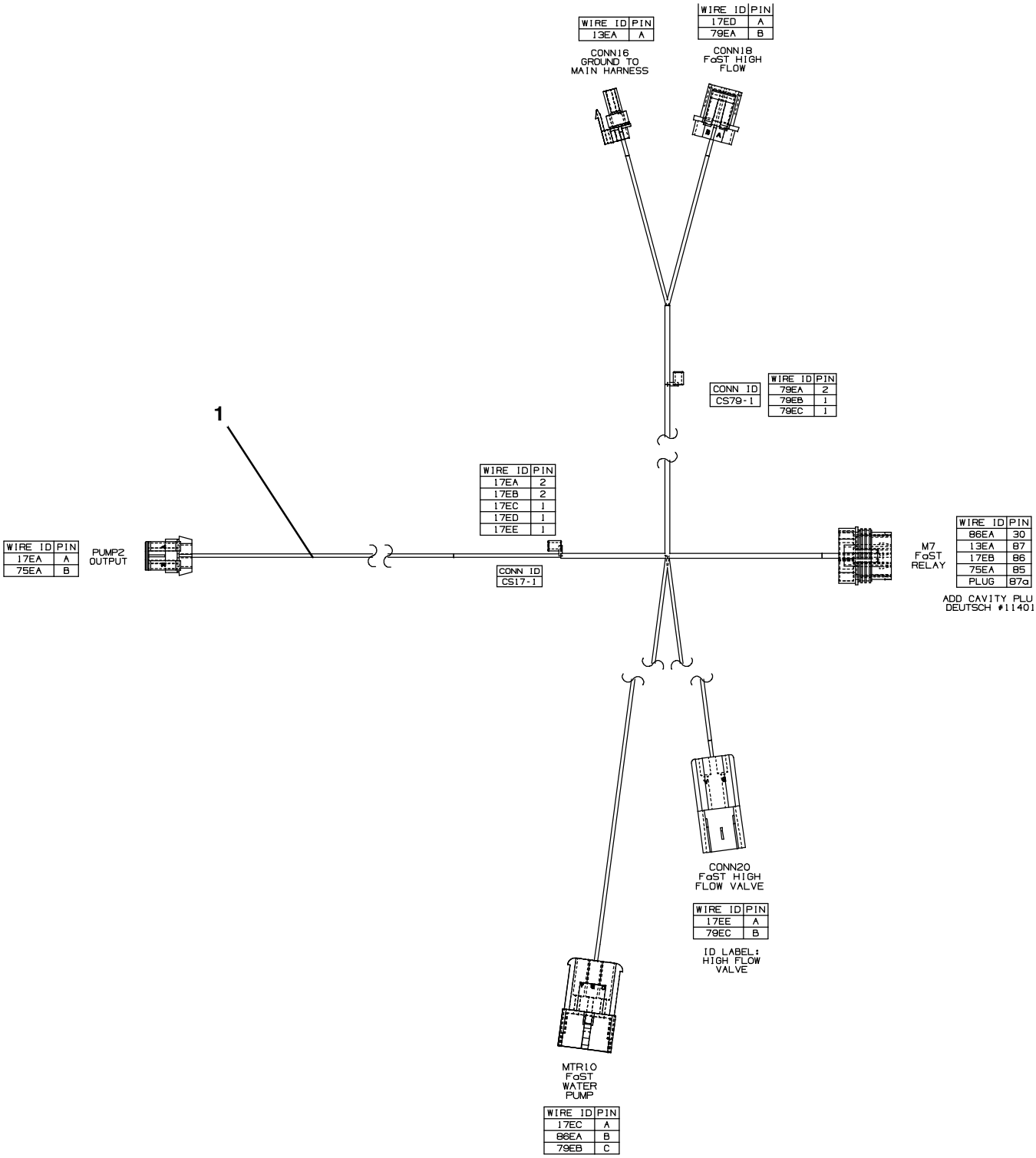

354724

Fig. 17 - Fast Wire Harness Group (002533-)

Ref.	Part No.	Serial Number	Description	Qty.
1	1037809	(002533-)	Harness, Wire [Fast Gen 2]	1

Fig. 18 - ec-H20 Solution Pump Group

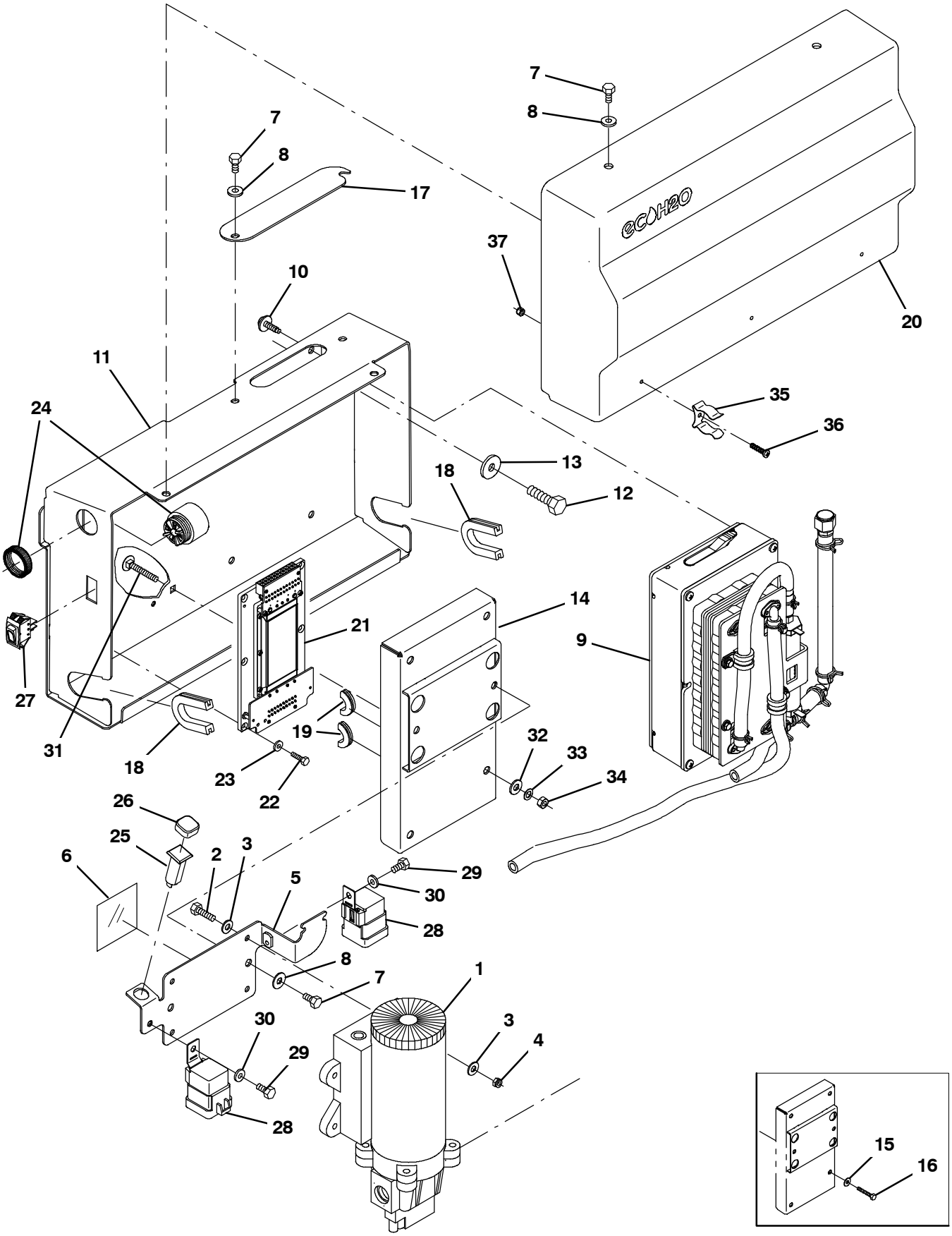

356033

Fig. 18 - ec-H20 Solution Pump Group

Ref.	Part No.	Serial Number	Description	Qty.
1	1060624	(000000-)	Pump, Soltn, Ele, 13.7vdc,12/28psi	1
2	09252	(000000-)	Screw, Hex, M5 X 0.80 X 20, 8.8	4
3	19066	(000000-)	Washer, Flat, 10	8
4	06549	(000000-)	Nut, Hex, Lock, M5 X 0.80, Nl	4
5	1060273	(000000-)	Plate, Mtg, Pump	1
6	1059677	(000000-)	Strip, Rbr, 0.06 03.54w 03.5l [Neo/60]	1
7	09744	(000000-)	Screw, Hex, M6 X 1.00 X 12, Ss	6
8	01684	(000000-)	Washer, Flat, 0.27b 0.69d .05, Ss	6
9	9007882	(000000-)	Module Kit, Replmt [Ec-H20] (See Breakdowns)	1
10	1040467	(000000-)	Screw, Hex, M6 X 1.00 X 20, 9.8, Sems	4
11	1060292	(000000-)	Plate Wldt, Mtg	1
12	09740	(000000-)	Screw, Hex, M8 X 1.25 X 20, Ss	2
13	1017218	(000000-)	Washer, Flat, 0.32b 1.00d .12, Ss	2
14	1060185	(000000-)	Cover Wldt, Power Supply	1
15	01684	(000000-xxxxxx)	Washer, Flat, 0.27b 0.69d .05, Ss	4
16	07805	(000000-xxxxxx)	Screw, Hex, M6 X 1.00 X 35, Ss	4
17	1060291	(000000-)	Plate, Inspection	1
18	1020168	(000000-)	Molding, Afmkt, Trim, Pvc, .08 .11, 01Ft	1
19	10632-4	(000000-)	Grommet, Rbr, 0.62id, F/0.9h, .06 Matl	1
20	1060719	(000000-)	Cover, Trimmed	1
21	1058963	(000000-)	Converter, Ele, 12-36 Vdc	1
22	09206	(000000-)	Screw, Hex, M4 X 0.70 X 12, 8.8	4
23	19065	(000000-)	Washer, Flat, 08	4
24	1052726	(000000-)	Alarm, 9-48vdc, 95 Db(A) [Ec-H20]	1
25	1053078	(000000-)	Circuitbreaker, 2.0a, Resetable	1
26	1046173	(000000-)	Boot, Circuitbreaker	1
27	1044393	(000000-)	Switch, Rocker, Spst, Mom	1
28	56186	(000000-)	Relay, 12vdc, 040a, Spdt No	2
29	09738	(000000-)	Screw, Hex, M5 X 0.80 X 12, Ss	2
30	01683	(000000-)	Washer, Flat, 10, Ss	2
31	1062804	(xxxxxx-)	Bolt, Carriage, M06 X 1.00 X 40, 4.6	4
32	41359	(xxxxxx-)	Nut, Hex, Std, M6 X 1.00, 8	4
33	32982	(xxxxxx-)	Washer, Lock, Int, 0.25	4
34	32483	(xxxxxx-)	Washer, Flat, 0.25, Sae	4
35	1029057	(000000-)	Clip, Grip, Finger, 0.88-1.25d	3
36	12323	(000000-)	Screw, Pan, Phl, M4 X 0.70 X 20, Ss	3
37	33932	(000000-)	Nut, Hex, Lock, M4 X 0.70, Nl, Ss	3

Fig. 19 - ec-H20 Solution Pump Supply Group

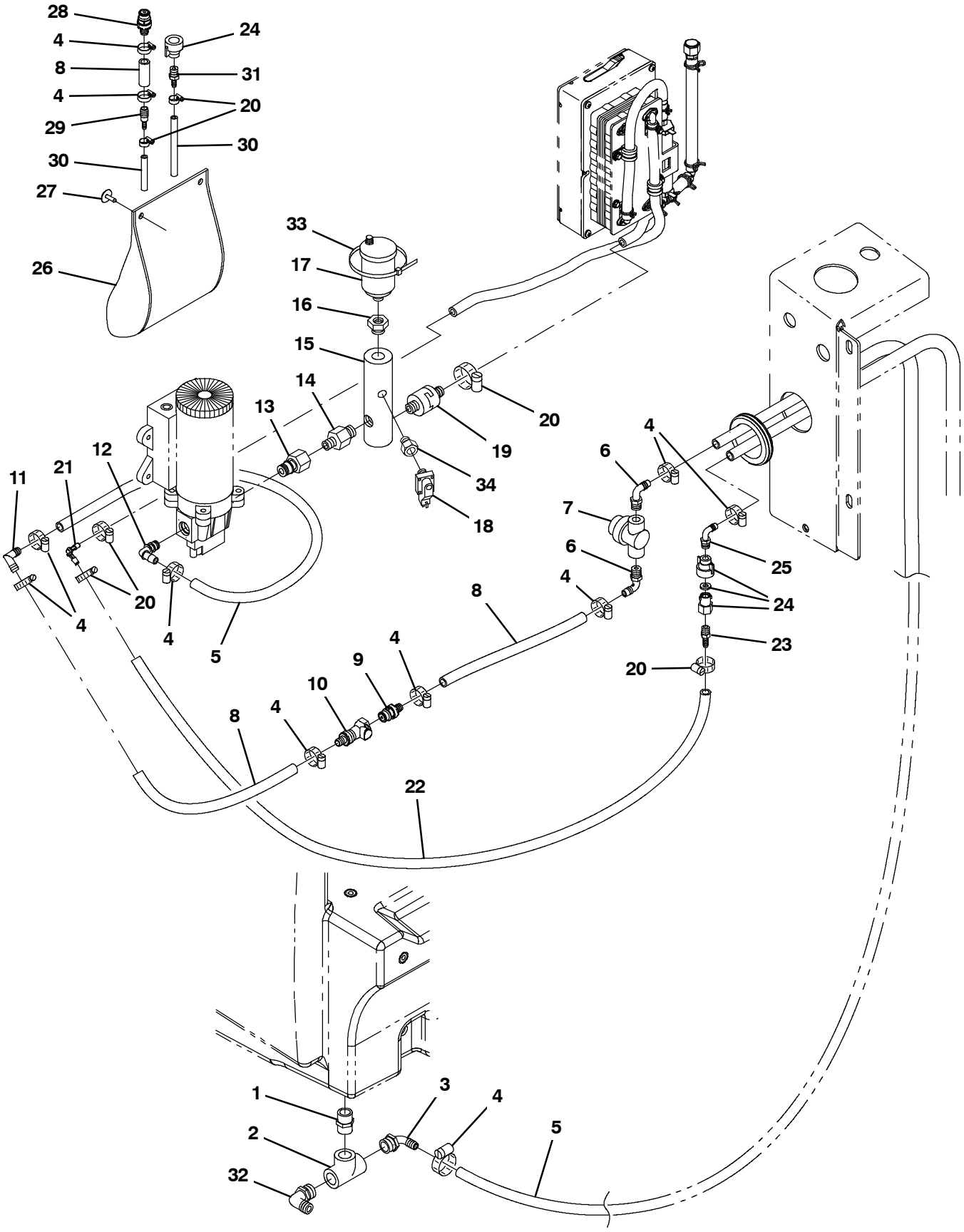

356034

Fig. 19 - ec-H20 Solution Pump Supply Group

Ref.	Part No.	Serial Number	Description	Qty.
1	24544	(000000-)	Fitting, Plstc, Str, Pm12/Pm12 1.60l	1
2	42133A	(000000-)	Fitting, Plstc, Tee, Pf12/Pf12/Pf12	1
3	1005552	(000000-)	Fitting, Plstc, E90, Bm08/Pm12, Nyl	1
4	54333	(000000-)	Clamp, Hose, Wormdrive, 0.31-0.88d, .31w	1
5	1011521	(000000-)	Hose, Afmkt, Pvc, Brd, 0.50id, 02ft, Clr	2
6	64778	(000000-)	Fitting, Plstc, E90, Bm08/Pm06	2
7	1005302	(000000-)	Filter, In-Line, Pf06/Pf06 080mesh 02.6l	1
8	1011403	(000000-)	Hose, Afmkt, Pvc, Brd, 0.50id, 01ft, Clr	3
9	1017415	(000000-)	Insert, Cplg, Qm, Bm08	1
10	1017413	(000000-)	Housing, Cplg, Qf / Pm08	1
11	63987-1	(000000-)	Fitting, Plstc, E90, Bm08/Bm08	1
12	1049254	(000000-)	Fitting, Nyl, Qdc, E90, Bm08/ Qm10	1
13	1059372	(000000-)	Fitting, Plstc, Str, Pf06/Qm10, Pvc	1
14	1005219	(000000-)	Fitting, Plstc, Str, Pm04/Pm06, Nyl	1
15	1060596	(000000-)	Manifold, Water	1
16	24698	(000000-)	Fitting, Brs, Str, Pf02/Pm06	1
17	1017386	(000000-)	Valve, Vent, Air, Float Type	1
18	1058935	(000000-)	Switch, Press, 50 Psi, Pm02	1
19	1060693	(000000-)	Valve, Check, 0005psi Pm04/Bm06	1
20	43844	(000000-)	Clamp, Hose, Wormdrive, 0.25-0.62d, .31w	1
21	1059391	(000000-)	Fitting, Plstc, E90, Bm05/Bm05, Nyl	1
22	1052336	(000000-)	Hose, Afmkt, PVC, Brd, 0.31Id, 03Ft, Clr	2
23	1052017	(000000-)	Fitting, Plstc, Str, Bm05/Pm04	1
24	1043866	(000000-)	Fitting Assy, Qdc, Pf04	2
25	65581	(000000-)	Fitting, Plstc, E90, Bm08/Pm04	1
26	48790	(000000-)	Pouch	1
27	72968	(000000-)	Rivet, Plstc, .250d X 0.90	2
28	1017415	(000000-)	Insert, Cplg, Qm, Bm08	1
29	630164	(000000-)	Fitting, Plstc, Str, Bm04/Bm08	1
30	1006415	(000000-)	Hose, Afmkt, Pvc, Clr, 0.25id, 03ft	2
31	50901	(000000-)	Fitting, Plstc, Str, Bm04/Pm04	1
32	14877	(000000-)	Fitting, Plstc, E90, Bm12/Pm12	1
33	130773	(000000-)	Tie, Cable, Nyl, 11.0L, .14W, 3.0 Max. D	1
34	1062403	(000000-)	Fitting, Brs, Snubber, Pm02/Pf02	1

Fig. 20 - ec-H20 Solution Supply Group

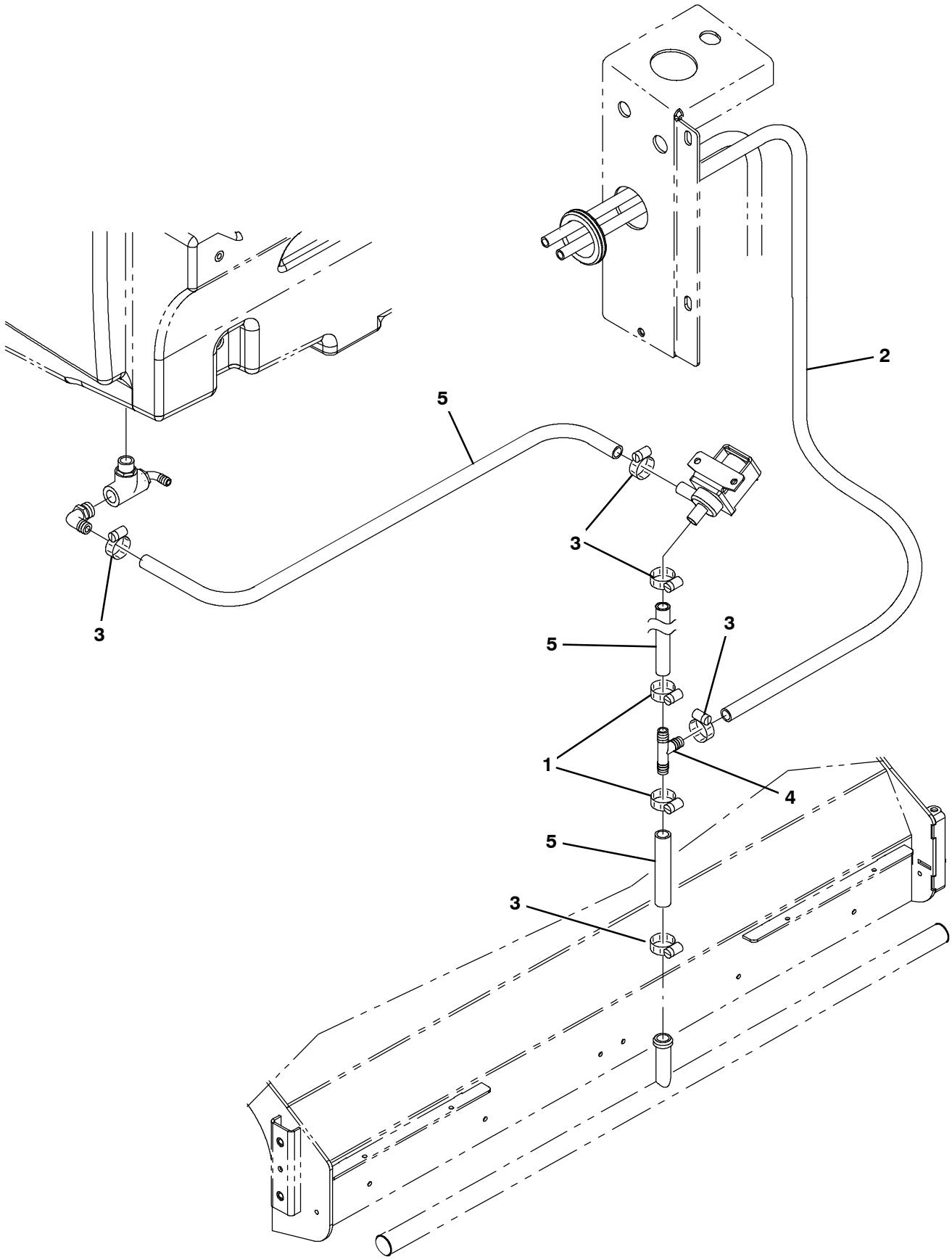

356037

Fig. 20 - ec-H20 Solution Supply Group

Ref.	Part No.	Serial Number	Description	Qty.
1	63810	(000000-)	Clamp, Hose, Wormdrive, 0.56-1.06d, .56w	2
2	1011837	(000000-)	Hose, Afmkt, Pvc, Brd, 0.50id, 12ft, Clr	1
3	54333	(000000-)	Clamp, Hose, Wormdrive, 0.31-0.88d, .31w	2
4	385644	(000000-)	Fitting, Plstc, Tee, Bm08/Bm12/Bm12, Br	1
5	1015045	(000000-)	Hose, Afmkt, Pvc, Brd, 0.75id, 08ft, Clr	1

Fig. 21 - ec-H20 Solution Supply Group with Side Brush

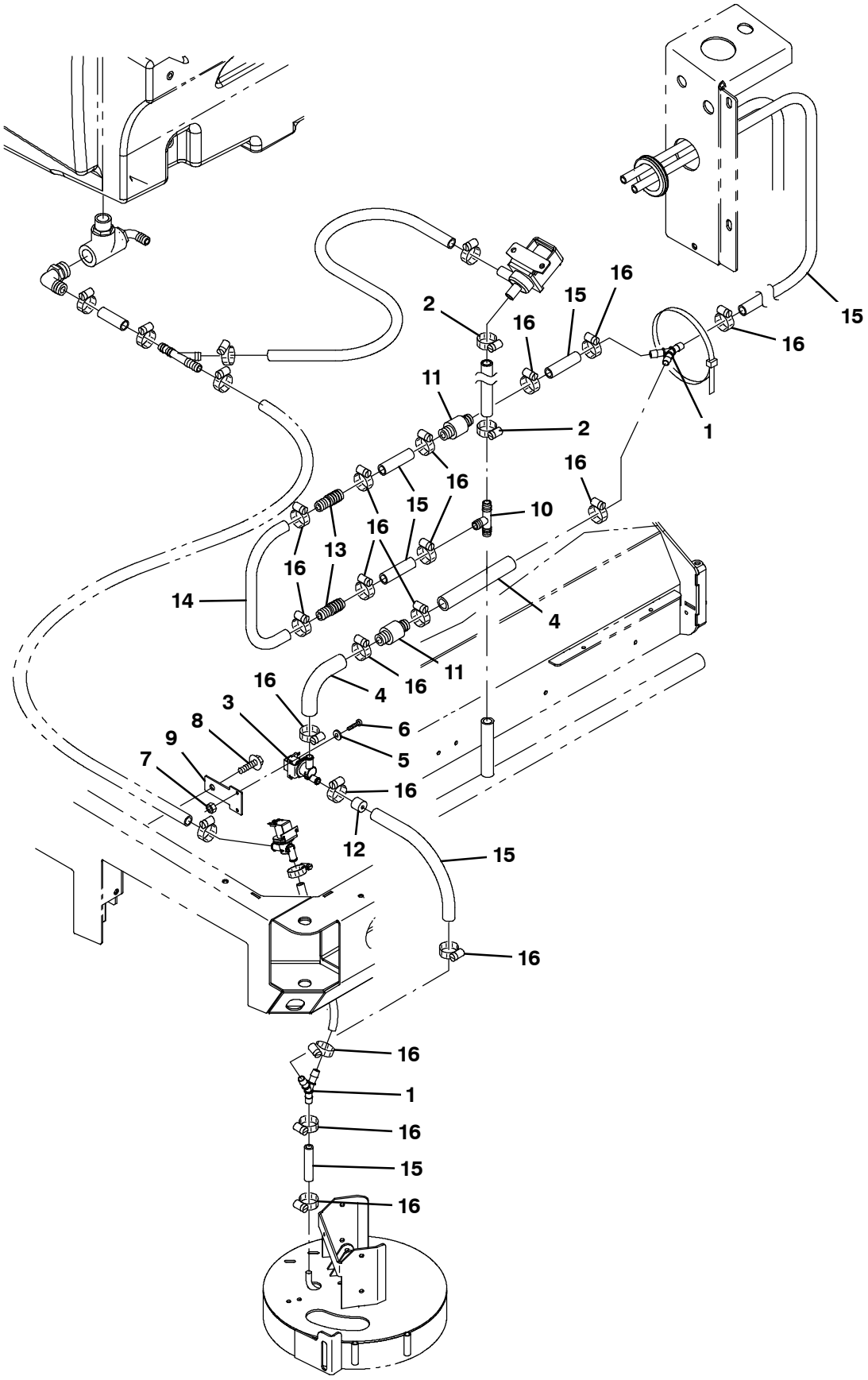

356038

Fig. 21 - ec-H20 Solution Supply Group with Side Brush

Ref.	Part No.	Serial Number	Description	Qty.
1	1010668	(000000-)	Fitting, Plstc, Y, Bm08/Bm08/Bm08, Nyl	1
2	63810	(000000-)	Clamp, Hose, Wormdrive, 0.56-1.06d, .56w	2
3	1037825	(000000-)	Valve Assy, Water, Solenoid, 12vdc	1
4	31543	(000000-)	Hose, Heater, E90, 0.62id, 24.0 4.0	1
5	01683	(000000-)	Washer, Flat, 10, Ss	2
6	09200	(000000-)	Screw, Pan, Phl, M5 X 0.80 X 12, Ss	2
7	09739	(000000-)	Nut, Hex, Lock, M5 X 0.80, Nl, Ss	2
8	76099	(000000-)	Screw, Hex, M8 X 1.25 X 25, Fmg	1
9	1030511	(000000-)	Plate, Mtg, Valve	1
10	385644	(000000-)	Fitting, Plstc, Tee, Bm08/Bm12/Bm12, Br	1
11	1010614	(000000-)	Valve, Check, 2gpm .5psi Bm08/Bm08	2
12	1061045	(000000-)	Plug, Restrictor	1
13	222375	(000000-)	Fitting, Plstc, Str, Bm06/Bm08	2
14	1014974	(000000-)	Hose, Afmkt, Pvc, Brd, 0.38id, 02ft, Clr	1
15	1011412	(000000-)	Hose, Afmkt, Pvc, Brd, 0.50id, 08ft, Clr	1
16	54333	(000000-)	Clamp, Hose, Wormdrive, 0.31-0.88d, .31w	18

Fig. 22 - ec-H20 Wire Harnesses Group

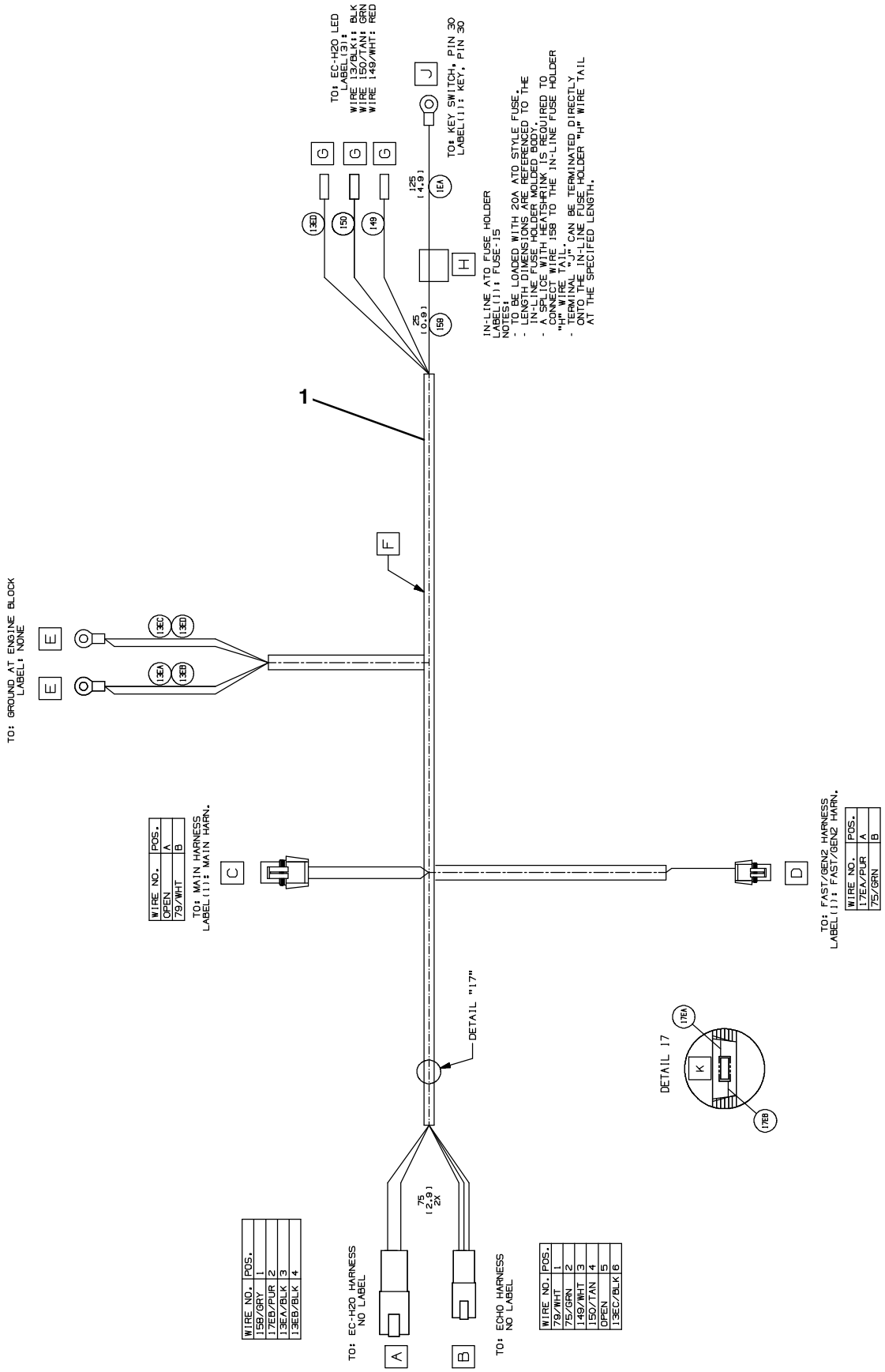

Fig. 22 - ec-H20 Wire Harnesses Group

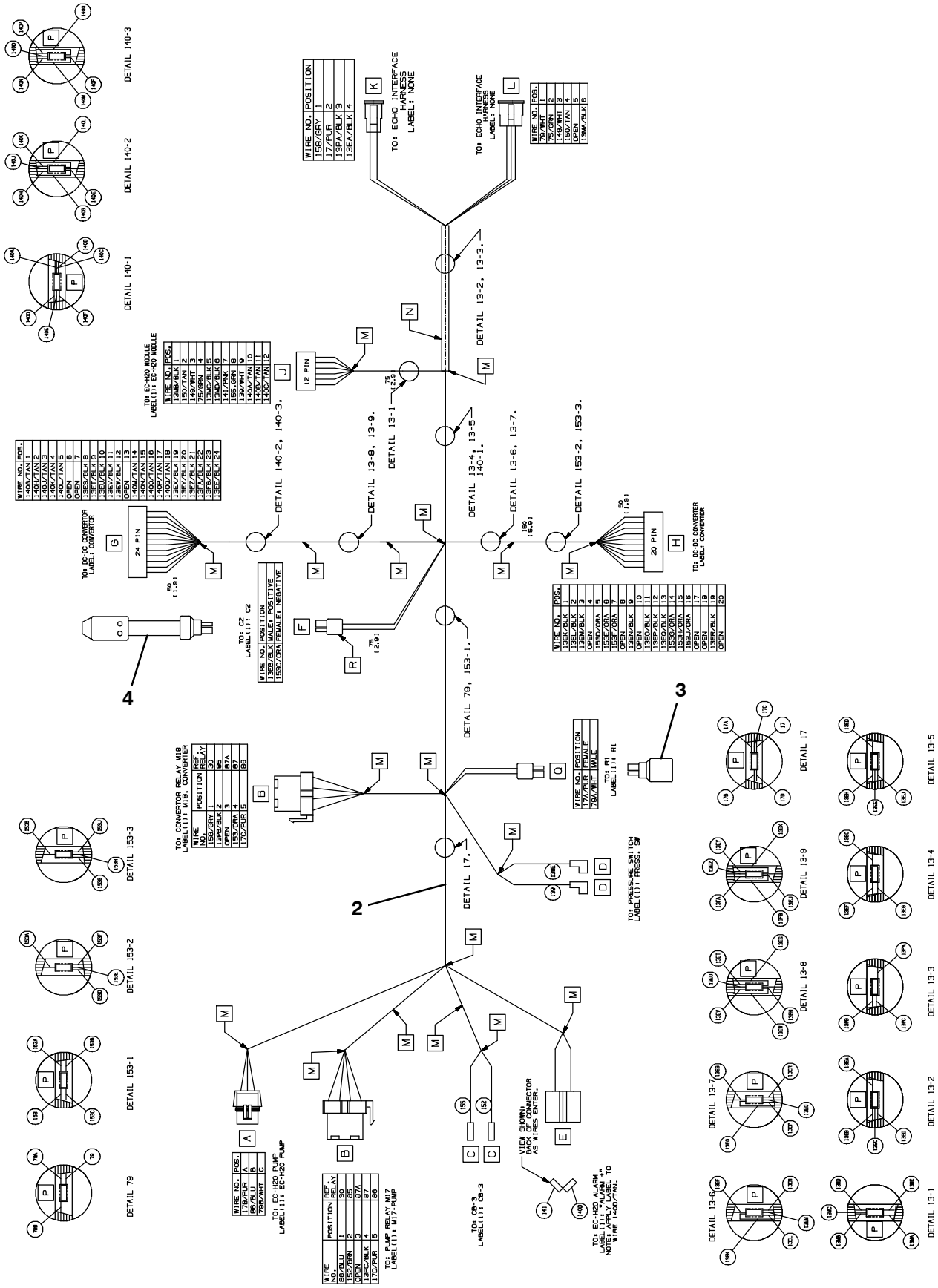

Home Find... Go To..

356038

Fig. 22 - ec-H20 Wire Harnesses Group

Ref.	Part No.	Serial Number	Description	Qty.
1	1060870	(000000-)	Harness, Wire, Interface [Ec-H2o]	1
2	1060871	(000000-)	Harness, Wire [Ec-H2o]	1
3	1060880	(000000-)	Resistor, Ele, Plug [430 , 2w]	1
4	1060881	(000000-)	Capacitor, Plug [4700uf, 25v]	1

Fig. 23 - Backup Alarm Kit

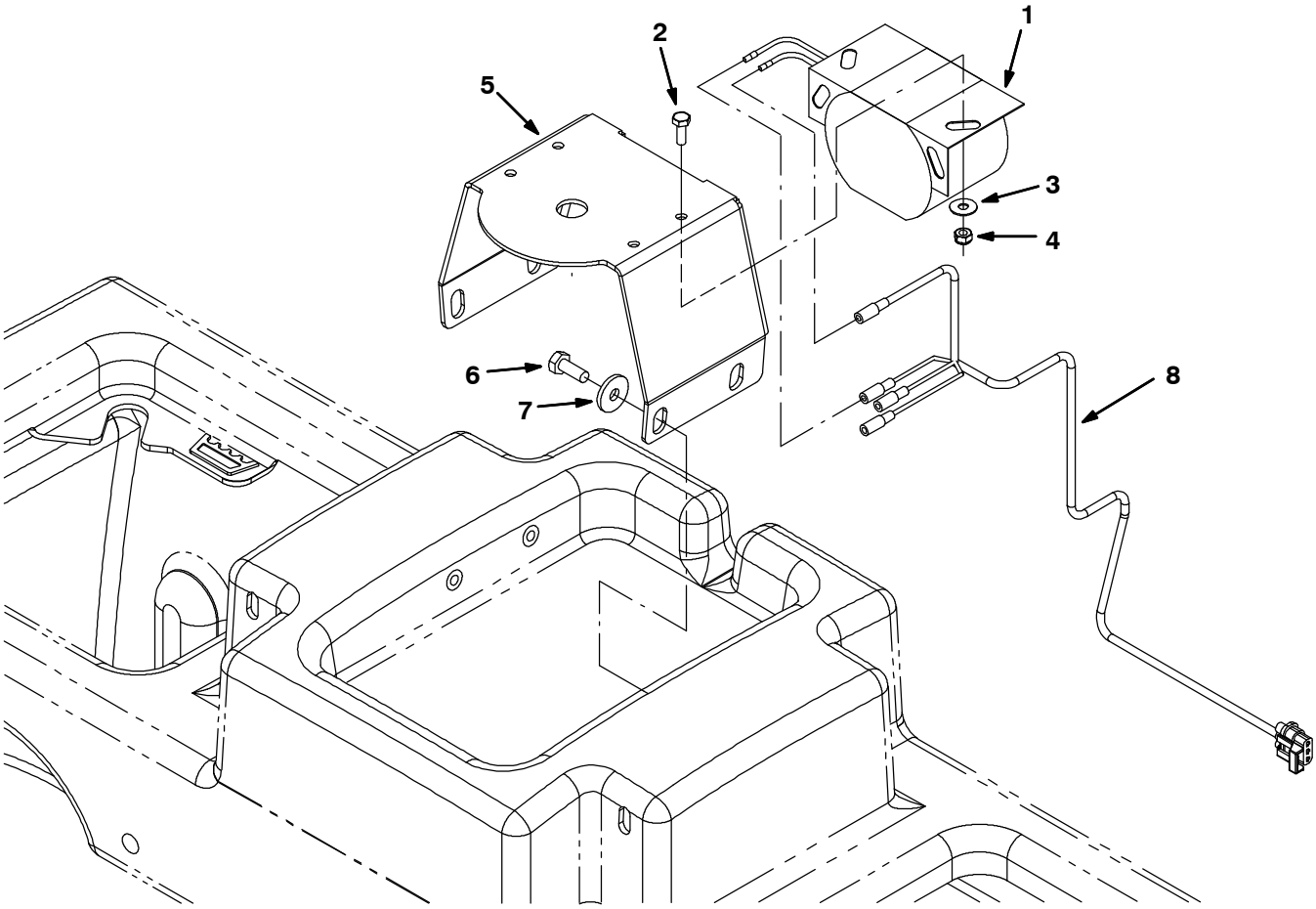

354473

	Ref.	Part No.	Serial Number	Description	Qty.
▽		9001321	(000000-)	Alarm Kit, Backup, Ci [M20 And T20]	1
▲	1	61920	(000000-)	Alarm Assy, Backup, 12-24vdc 82-107dba	1
▲	2	24196	(000000-)	Screw, Pan, Phl, M5 X 0.80 X 20, Ss	2
▲	3	19066	(000000-)	Washer, Flat, 10	2
▲	4	09739	(000000-)	Nut, Hex, Lock, M5 X 0.80, Nl, Ss	2
▲	5	1019445	(000000-)	Bracket, Sppt, Revl Light	1
▲	6	09740	(000000-)	Screw, Hex, M8 X 1.25 X 20, Ss	4
▲	7	1017218	(000000-)	Washer, Flat, 0.32b 1.00d .12, Ss	4
▲	8	1019971	(000000-)	Harness, Warning / Backup [M20 & T20]	1

Fig. 24 - Light Kit, Flashing

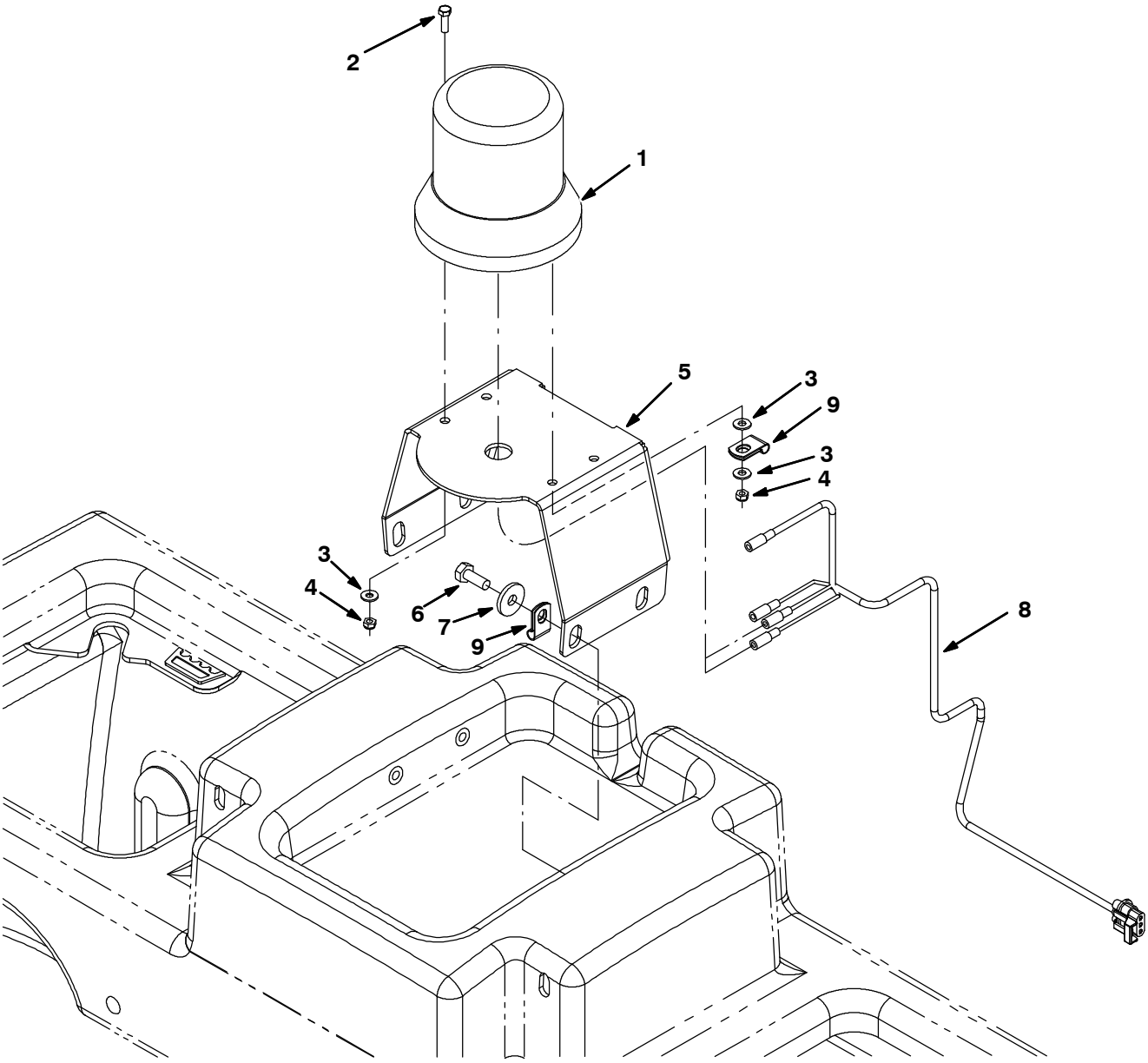

354475

Fig. 24 - Light Kit, Flashing

	Ref.	Part No.	Serial Number	Description	Qty.
▽		9001327	(000000-)	Light Kit, Flsh, Ci [M20 And T20]	1
▲▽	1	1017248	(000000-)	Lamp, Flasher, Amb [12-48 Vdc]	1
▲▲		9000879	(000000-)	Lens, Lamp, Amb, Strobe/Flasher	1
▲▲		9000846	(000000-)	Lamp, Bulb, Flsh	1
▲▲		1027800	(000000-)	Lens, Blue, Option, F/ Revl / Flsh Light	1
▲▲		1027798	(000000-)	Lens, Red, Option, F/ Revl / Flsh Light	1
▲		55272	(000000-)	Terminal, Bullet, Mal, .157d, 12ga	2
▲	2	24196	(000000-)	Screw, Pan, Phl, M5 X 0.80 X 20, Ss	2
▲	3	19066	(000000-)	Washer, Flat, 10	2
▲	4	09739	(000000-)	Nut, Hex, Lock, M5 X 0.80, Nl, Ss	2
▲	5	1019445	(000000-)	Bracket, Sppt, Revl Light	1
▲	6	09740	(000000-)	Screw, Hex, M8 X 1.25 X 20, Ss	4
▲	7	1017218	(000000-)	Washer, Flat, 0.32b 1.00d .12, Ss	4
▲	8	1019971	(000000-)	Harness, Warning / Backup [M20 & T20]	1
▲	9	46236	(000000-)	Clamp, Cable, Stl, 0.25D X 0.56W, 1Hole	2

Fig. 25 - Light Kit, Revolving

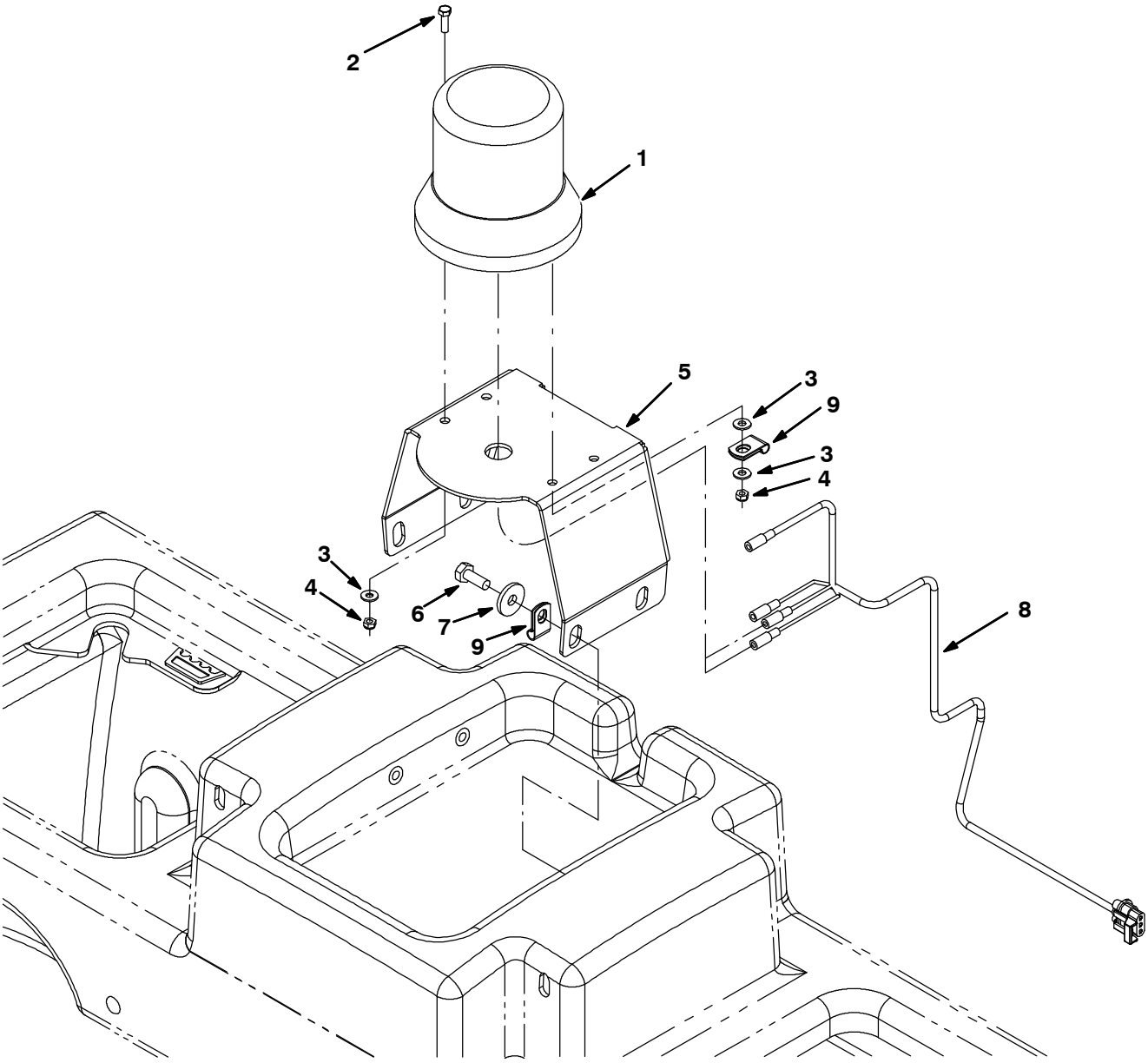

354475

Fig. 25 - Light Kit, Revolving

	Ref.	Part No.	Serial Number	Description	Qty.
▽		9001331	(000000-)	Light Kit, Revl, Ci [M20 And T20]	1
▲▽	1	1017250	(000000-)	Lamp Strobe, Amb [12-48 Vdc]	1
▲▲		9000879	(000000-)	Lens, Lamp, Amb, Strobe/Flasher	1
▲▲		9000845	(000000-)	Lamp, Bulb, Strobe	1
▲▲		1027800	(000000-)	Lens, Blue, Option, F/ Revl / Flsh Light	1
▲▲		1027798	(000000-)	Lens, Red, Option, F/ Revl / Flsh Light	1
▲		55272	(000000-)	Terminal, Bullet, Mal, .157d, 12ga	2
▲	2	24196	(000000-)	Screw, Pan, Phl, M5 X 0.80 X 20, Ss	2
▲	3	19066	(000000-)	Washer, Flat, 10	2
▲	4	09739	(000000-)	Nut, Hex, Lock, M5 X 0.80, Nl, Ss	2
▲	5	1019445	(000000-)	Bracket, Sppt, Revl Light	1
▲	6	09740	(000000-)	Screw, Hex, M8 X 1.25 X 20, Ss	4
▲	7	1017218	(000000-)	Washer, Flat, 0.32b 1.00d .12, Ss	4
▲	8	1019971	(000000-)	Harness, Warning / Backup [M20 & T20]	1
▲	9	46236	(000000-)	Clamp, Cable, Stl, 0.25D X 0.56W, 1Hole	2

Fig. 26 - Light Kit, Flashing Overhead Guard

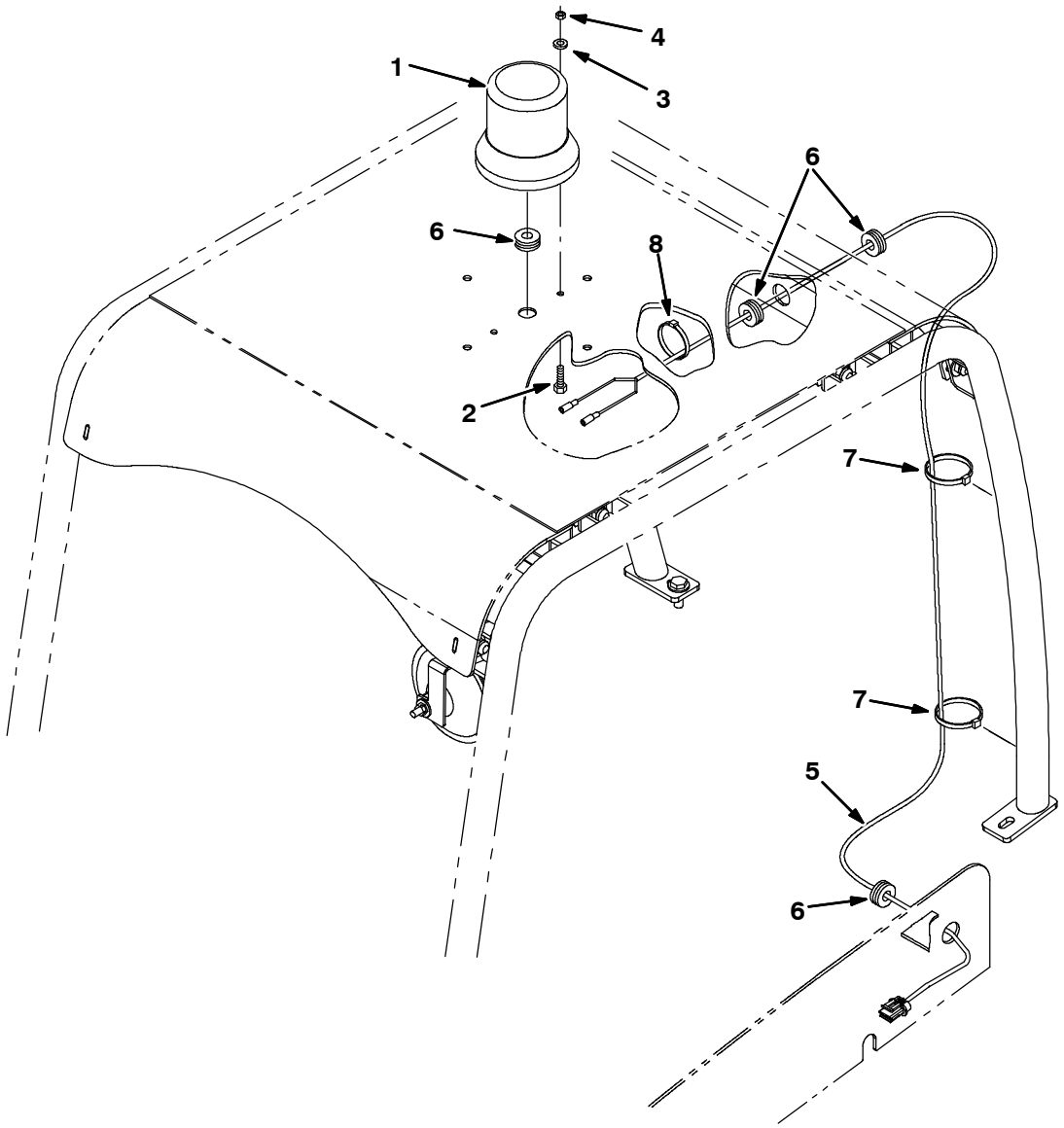

354477

	Ref.	Part No.	Serial Number	Description	Qty.
▽		9001718	(000000-)	Light Kit, Flsh, W/Ohg, Ci[M20 And T20]	1
▲▽	1	1017248	(000000-)	Lamp, Flasher, Amb [12-48 Vdc]	1
▲▲		9000879	(000000-)	Lens, Lamp, Amb, Strobe/Flasher	1
▲▲		9000846	(000000-)	Lamp, Bulb, Flsh	1
▲▲		1027800	(000000-)	Lens, Blue, Option, F/ Revl / Flsh Light	1
▲▲		1027798	(000000-)	Lens, Red, Option, F/ Revl / Flsh Light	1
▲		55272	(000000-)	Terminal, Bullet, Mal, .157d, 12ga	2
▲	2	24196	(000000-)	Screw, Pan, Phl, M5 X 0.80 X 20, Ss	2
▲	3	19066	(000000-)	Washer, Flat, 10	2
▲	4	09739	(000000-)	Nut, Hex, Lock, M5 X 0.80, Nl, Ss	2
▲	5	1019647	(000000-)	Harness, Warning / Ohg [M20]	1
▲	6	10632-17	(000000-)	Grommet, Rbr, 0.50id, F/0.8h, .12 Matl	4
▲	7	763115	(000000-)	Tie, Cable, 6.0l, 1.25d Max	4
▲	8	49266	(000000-)	Tie, Cable, Nyl, 07.3l .19w 1.8 Max D	2

Fig. 27 - Light Kit, Revolving Overhead Guard

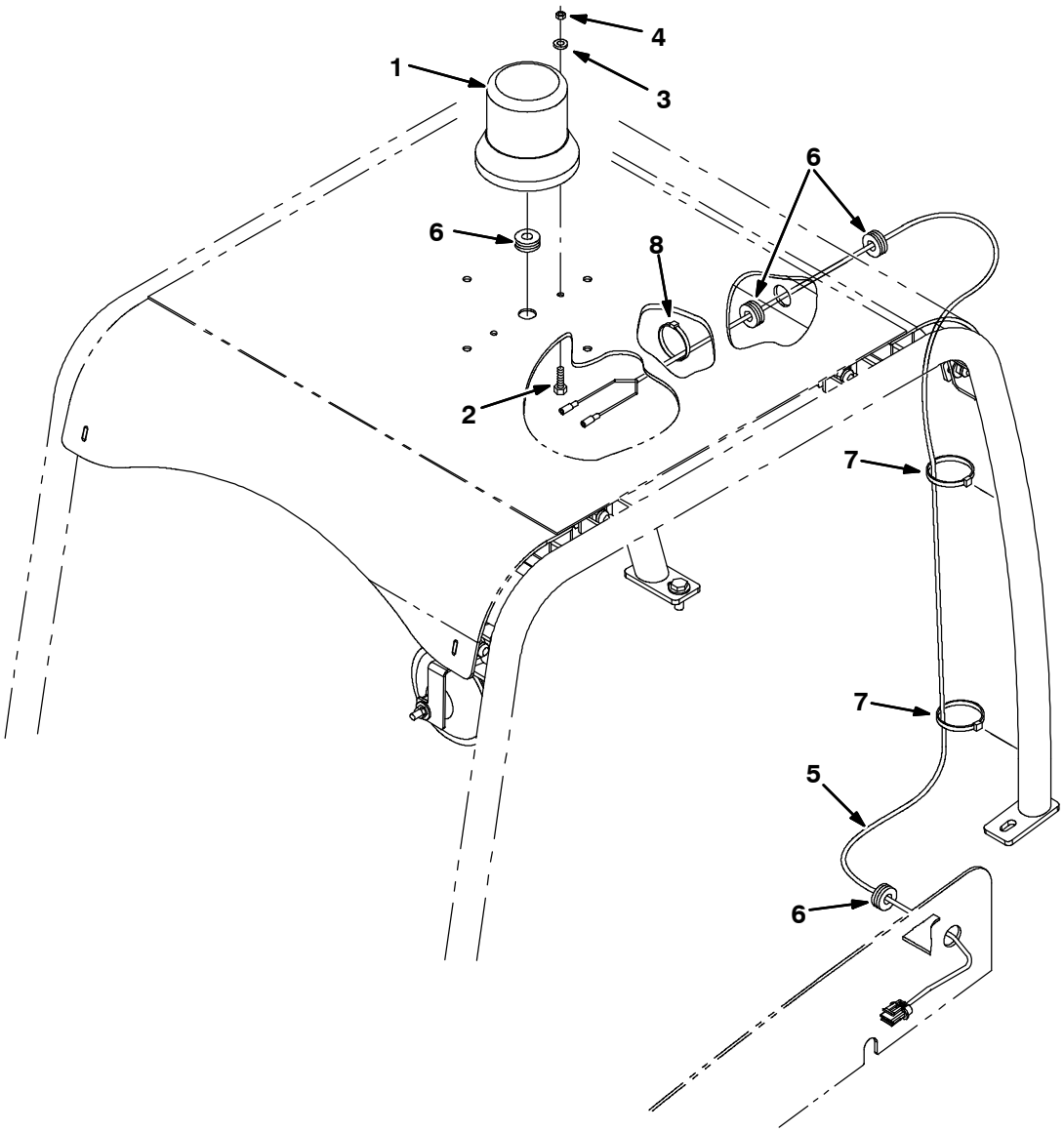

354477

	Ref.	Part No.	Serial Number	Description	Qty.
▽		9001717	(000000-)	Light Kit, Revl, W/Ohg, Ci [M20 And T20]	1
▲▽	1	1017250	(000000-)	Lamp Strobe, Amb [12-48 Vdc]	1
▲▲		9000879	(000000-)	Lens, Lamp, Amb, Strobe/Flasher	1
▲▲		9000845	(000000-)	Lamp, Bulb, Strobe	1
▲▲		1027800	(000000-)	Lens, Blue, Option, F/ Revl / Flsh Light	1
▲▲		1027798	(000000-)	Lens, Red, Option, F/ Revl / Flsh Light	1
▲		55272	(000000-)	Terminal, Bullet, Mal, .157d, 12ga	2
▲	2	24196	(000000-)	Screw, Pan, Phl, M5 X 0.80 X 20, Ss	2
▲	3	19066	(000000-)	Washer, Flat, 10	2
▲	4	09739	(000000-)	Nut, Hex, Lock, M5 X 0.80, Nl, Ss	2
▲	5	1019647	(000000-)	Harness, Warning / Ohg [M20]	1
▲	6	10632-17	(000000-)	Grommet, Rbr, 0.50id, F/0.8h, .12 Matl	4
▲	7	763115	(000000-)	Tie, Cable, 6.0l, 1.25d Max	4
▲	8	49266	(000000-)	Tie, Cable, Nyl, 07.3l .19w 1.8 Max D	2

Fig. 28 - Overhead Guard Kit

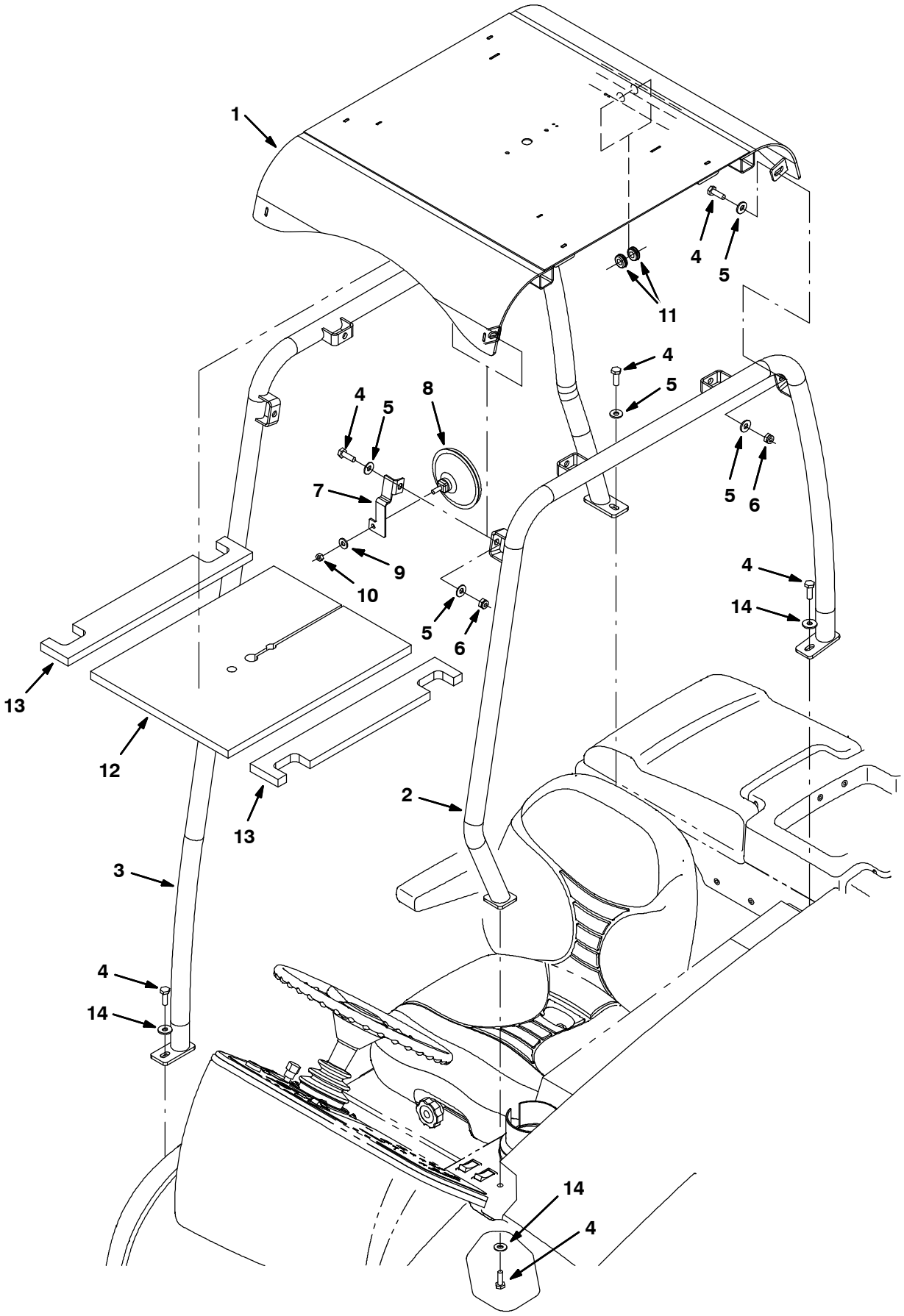

354478

Fig. 28 - Overhead Guard Kit

	Ref.	Part No.	Serial Number	Description	Qty.
▽		9001314	(000000-)	Ohg Kit, Ci [M20 And T20]	1
▲	1	1022276	(000000-)	Guard Wldt, Top, Ohg	1
▲	2	1022265	(000000-)	Tube Wldt, Leg, Ohg, Lh, Pntd	1
▲	3	1022266	(000000-)	Tube Wldt, Leg, Ohg, Rh, Pntd	1
▲	4	03192	(000000-)	Screw, Hex, M10 X 1.5 X 30, 8.8	12
▲	5	32492	(000000-)	Washer, Flat, 0.38 Std	17
▲	6	41430	(000000-)	Nut, Hex, Lock, M10 X 1.5, Nl	8
▲	7	1023879	(000000-)	Bracket, Mtg, Mirror, Rearview	1
▲	8	1050295	(000000-)	Mirror, Convex, 0.50D	1
▲	9	32491	(000000-)	Washer, Flat, 0.31, Std	1
▲	10	19313	(000000-)	Nut, Hex, Std, .31-18	1
▲	11	10632-17	(000000-)	Grommet, Rbr, 0.50id, F/0.8h, .12 Matl	2
▲	12	1032830	(000000-)	Insulation	1
▲	13	1032831	(000000-)	Insulation	2
▲	14	1014563	(000000-)	Washer, Flat, 0.40b 1.12d .12, Ss	3

Fig. 29 - Vacuum Wand Kit (000000-002406)

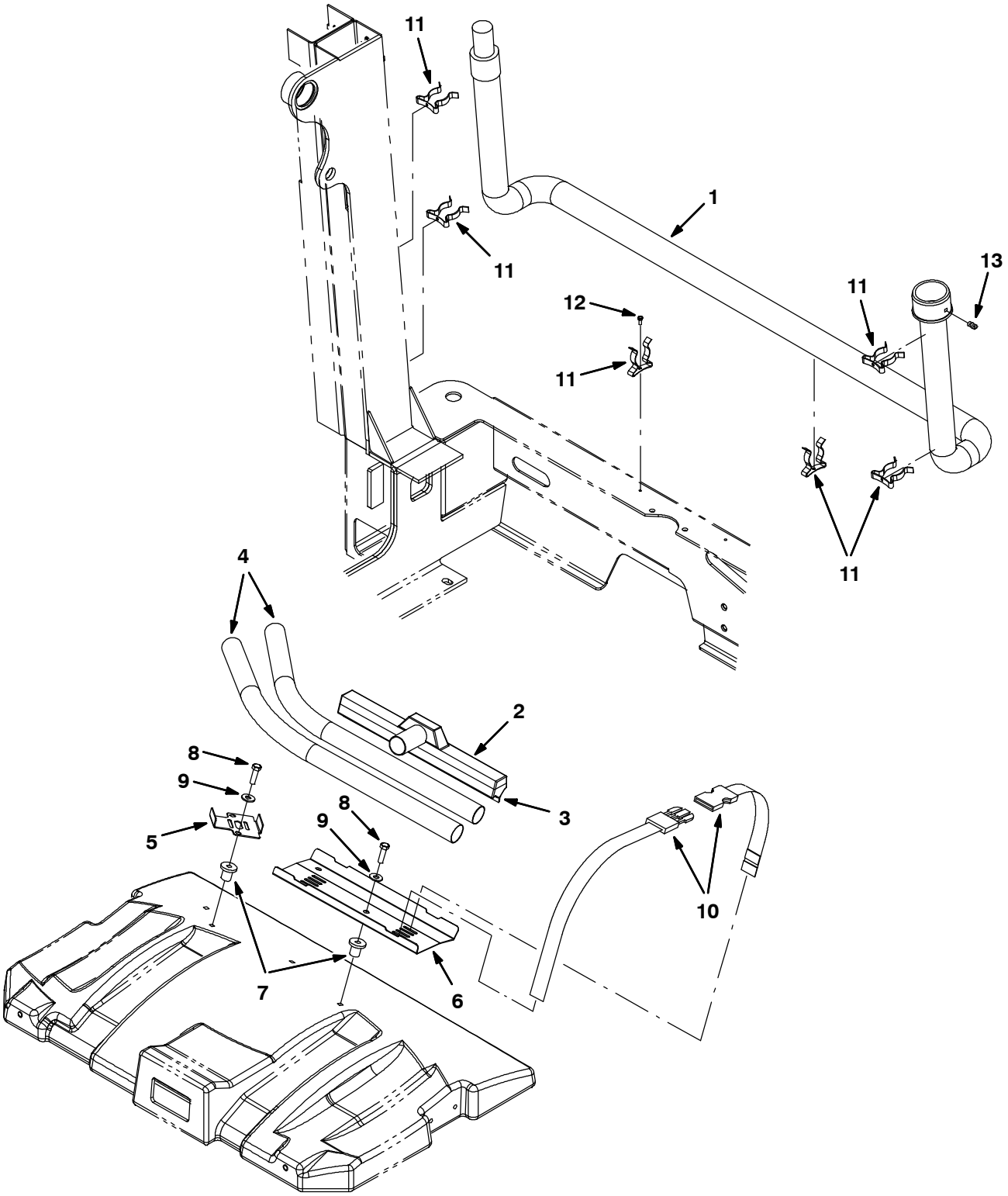

354479

Fig. 29 - Vacuum Wand Kit (000000-002406)

	Ref.	Part No.	Serial Number	Description	Qty.
▽		9001334	(000000-002406)	Wand Kit, Vacuum, Ci [M20]	1
▲	1	69657	(000000-002406)	Hose Assy, W/2cuff, 1.5d 84l [Vacwand]	1
▲	2	63451	(000000-002406)	Nozzle, Wand, Plstc, 14.0lg	1
▲	3	63430	(000000-002406)	Shoe, Plstc, Sqge, 14.0	1
▲	4	63448	(000000-002406)	Tube, Wand, Vacuum, Metal [1pick=1box]	1
▲	5	1030549	(000000-002406)	Bracket, Mtg, Vacuum Wand	1
▲	6	1026146	(000000-002406)	Plate, Mtg, Vacuum Wand	1
▲	7	397648	(000000-002406)	Nut, Isolator, .38-16 Wall Th .015-.437	4
▲	8	21198	(000000-002406)	Screw, Hex, .38-16 X 1.25, 5	4
▲	9	32492	(000000-002406)	Washer, Flat, 0.38 Std	4
▲	10	367974	(000000-002406)	Strap, Pyp, 0.07 1.0w 18.5l, W/ Buckle	3
▲	11	67004	(000000-002406)	Clip, Grip, Finger, 1.00-1.88d White,Vyl	6
▲	12	55845	(000000-002406)	Screw, Hex, M5 X 0.8 X 16, Fmg	6
▲	13	69659	(000000-002406)	Plunger	1

Fig. 30 - Vacuum Wand Kit (002407-)

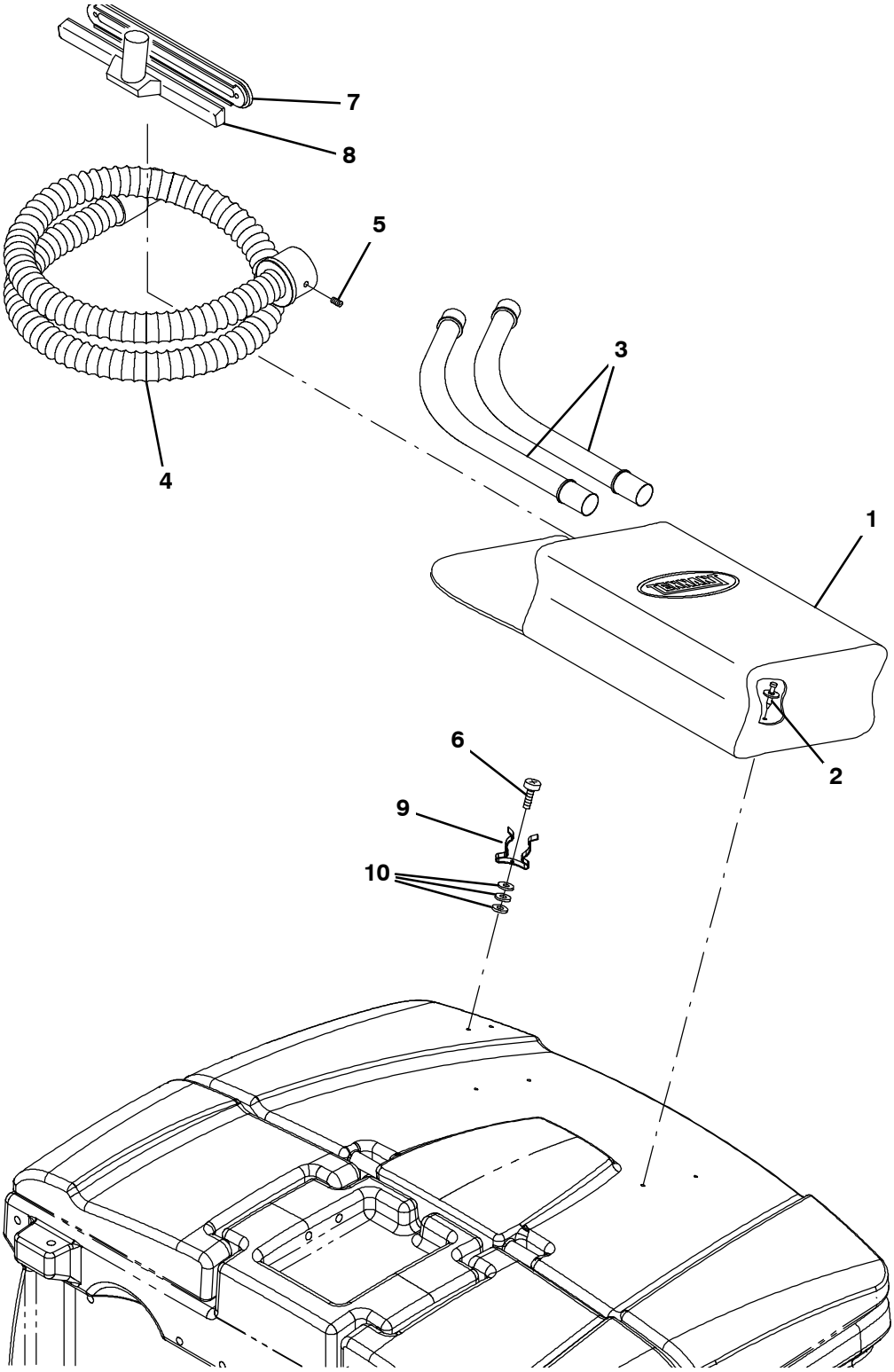

354659

Fig. 30 - Vacuum Wand Kit (002407-)

	Ref.	Part No.	Serial Number	Description	Qty.
▽		9001334	(002407-)	Wand Kit, Vacuum, Ci [M20]	1
▲	1	65580	(002407-)	Bag, Power	1
▲	2	72968	(002407-)	Rivet, Plstc, .250d X 0.90	4
▲	3	63448	(002407-)	Tube, Wand, Vacuum, Metal	1
▲	4	69657	(002407-)	Hose Assy, W/2cuff, 1.5d 084l [Vacwand]	1
▲	5	69659	(002407-)	Plunger	1
▲	6	55845	(002407-)	Screw, Hex, M5 X 0.80 X 16, Fmg	2
▲	7	63430	(002407-)	Shoe, Plstc, Sqge, 14.0	1
▲	8	63451	(002407-)	Nozzle, Wand, Plstc, 14.0l	1
▲	9	67004	(002407-)	Clip, Grip, Finger, 1.00-1.88d White,Vyl	2
▲	10	19064	(002407-)	Washer, Flat, 06	6

Fig. 31 - Spray Nozzle Kit

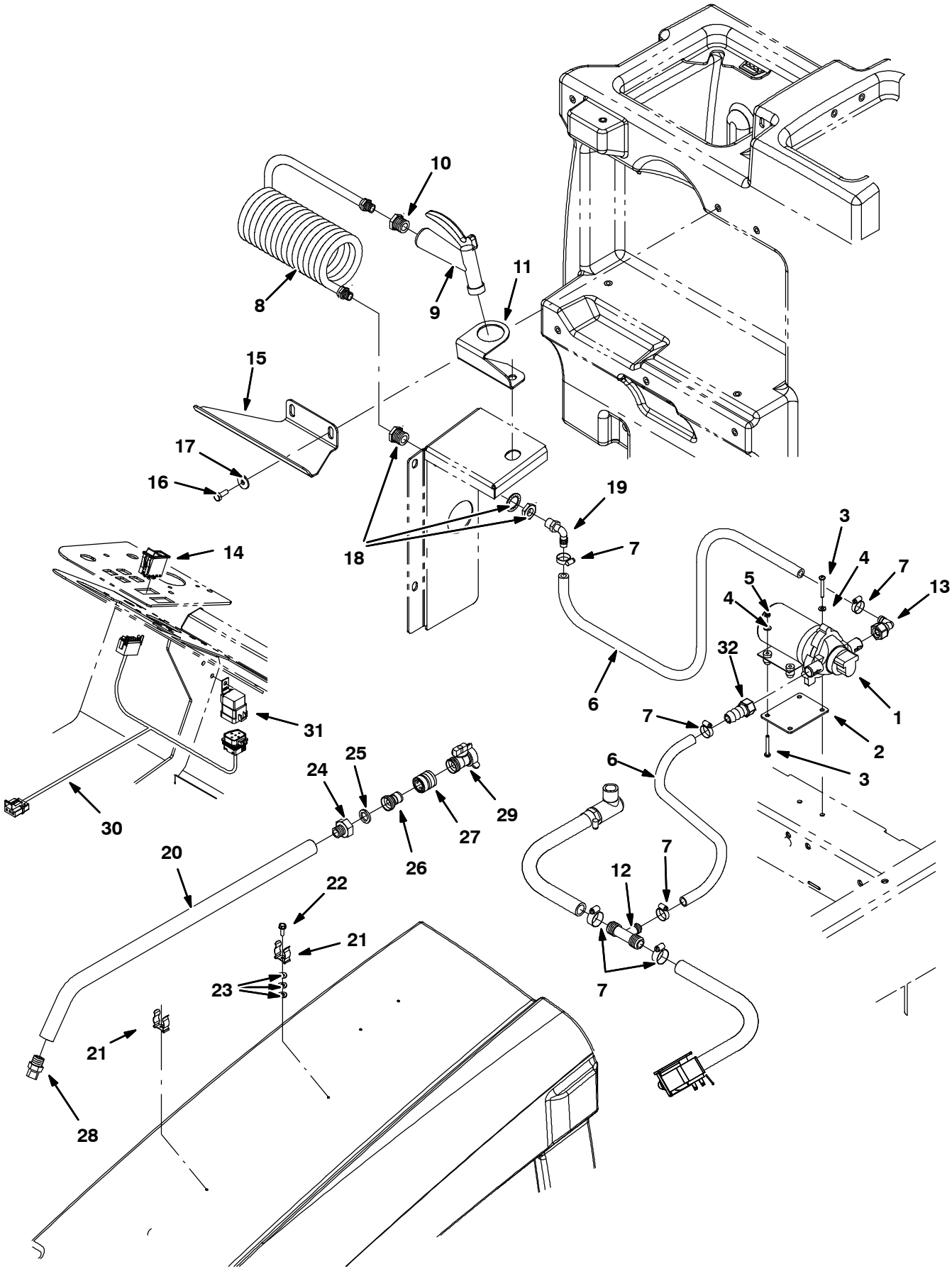

354480

Fig. 31 - Spray Nozzle Kit

	Ref.	Part No.	Serial Number	Description	Qty.
▽		9001310	(000000-)	Nozzle Kit, Spray, Ci	1
▲	1	1026743	(000000-)	Pump, Diaphragm (See Breakdown)	1
▲	2	1027007	(000000-)	Plate, Mtg, Pump	1
▲	3	06939	(000000-)	Screw, Pan, M5 X 0.80 X 45, 4.8	4
▲	4	19066	(000000-)	Washer, Flat, #10	4
▲	5	06549	(000000-)	Nut, Hex, Lock, M5 X 0.80, Nl	2
▲	6	1015045	(000000-)	Hose, Afmkt, Pvc, Brd, 0.75id, 08ft, Clr	1
▲	7	63810	(000000-)	Clamp, Hose, Wormdrive, 0.56-1.06d, .56w	6
▲	8	1019250	(000000-)	Hose, Water, Coil	1
▲	9	769785	(000000-)	Nozzle, Spray, Gun	1
▲	10	1027976	(000000-)	Fitting, Brs, Str, Pf06/Pm12	1
▲	11	1027237	(000000-)	Bracket, Mtg, Spray Handle	1
▲	12	385644	(000000-)	Fitting, Plstc, Tee, Bm08/Bm12/Bm12, Br	1
▲	13	1018499	(000000-)	Fitting, Plstc, E90, Bm08/Pf08s, Swivel	1
▲	14	398500	(000000-)	Switch, Rocker, Dpdt On/None/On	1
▲	15	1029790	(000000-)	Bracket, Mtg, Spray Wand [Fast, Conv]	1
▲	16	09740	(000000-)	Screw, Hex, M8 X 1.25 X 20, Ss	2
▲	17	1017218	(000000-)	Washer, Flat, 0.32b 1.00d .12, Ss	2
▲	18	1027978	(000000-)	Fitting, Brs, Str, Pf06/Pf06 Bh	1
▲	19	64778	(000000-)	Fitting, Plstc, E90, Bm08/Pm06	1
▲	20	1029055	(000000-)	Wand, Clean-Out	1
▲	21	1029057	(000000-)	Clip, Grip, Finger, .875-1.25	2
▲	22	20394	(000000-)	Screw, Hex, #10-16 X 0.62, Fmg [Ab]	2
▲	23	01683	(000000-)	Washer, Flat, #10, Ss	6
▲	24	375321	(000000-)	Fitting, Brs, Str, Pm08/Garden Hose	1
▲	25	01316	(000000-)	Washer, Flat, 0.66b 1.00d .12, Rbr	1
▲	26	1029153	(000000-)	Nipple, Hose	1
▲	27	1029155	(000000-)	Coupling, Nozzle, Spray	1
▲	28	1029156	(000000-)	Nozzle	1
▲	29	1029399	(000000-)	Valve, Shutoff	1
▲	30	1021881	(000000-)	Harness, Spray, Nozzle	1
▲	31	56186	(000000-)	Relay, 12vdc, 40a, Spdt N/O	1
▲	32	1018495	(000000-)	Fitting, Plstc, Str, Bm08/Pf08s, Swivel	1

Fig. 32 - Transport Group

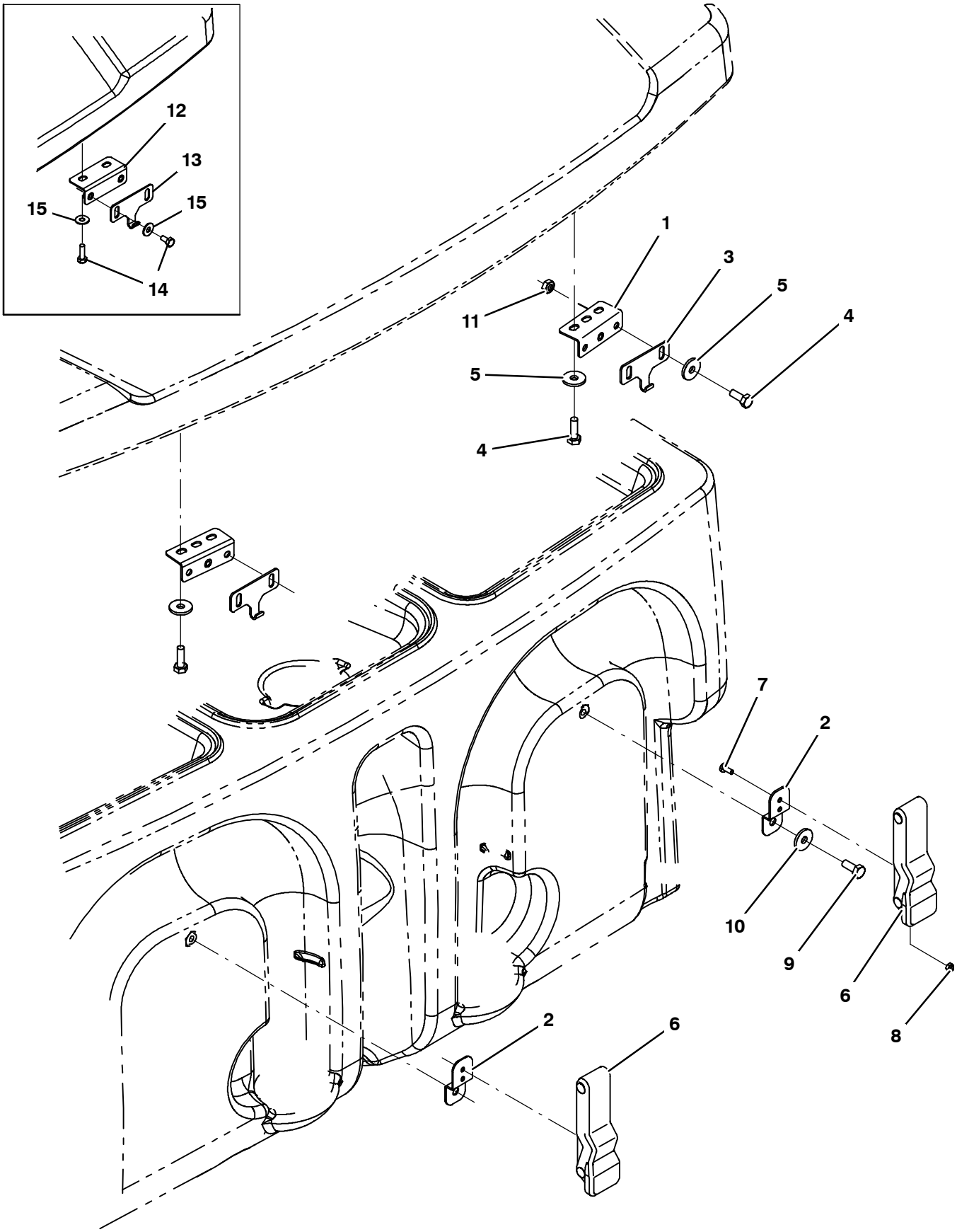

354481

Fig. 32 - Transport Group

Ref.	Part No.	Serial Number	Description	Qty.
1	1040800	(002473-)	Bracket, Latch, Cover	2
2	1020526	(000000-)	Bracket, Retaining, Hose	2
3	1032896	(002473-)	Plate, Hook, Latch, [M20]	2
4	09744	(002473-)	Screw, Hex, M6 X 1.00 X 12, Ss	8
5	01684	(002473-)	Washer, Flat, 0.27b 0.69d .05, Ss	8
6	360824	(000000-)	Latch	2
7	09200	(000000-)	Screw, Pan, Phl, M5 X 0.80 X 12, Ss	4
8	09739	(000000-)	Nut, Hex, Lock, M5 X 0.80, Nl, Ss	4
9	393135	(000000-)	Screw, Btn, M8 X 1.25 X 20, Blk	2
10	32491	(000000-)	Washer, Flat, 0.31, Std	2
11	08712	(002473-)	Nut, Hex, Lock, M6 X 1.00, Nl, Ss	4
12	1032869	(000000-002472)	Bracket, Latch, Cover	2
13	1032896	(000000-002472)	Plate, Hook, Latch, [M20]	2
14	09744	(000000-002472)	Screw, Hex, M6 X 1.0 X 12, Ss	8
15	01684	(000000-002472)	Washer, Flat, 0.25, Ss	8

Fig. 33 - Squeegee Guard Kit

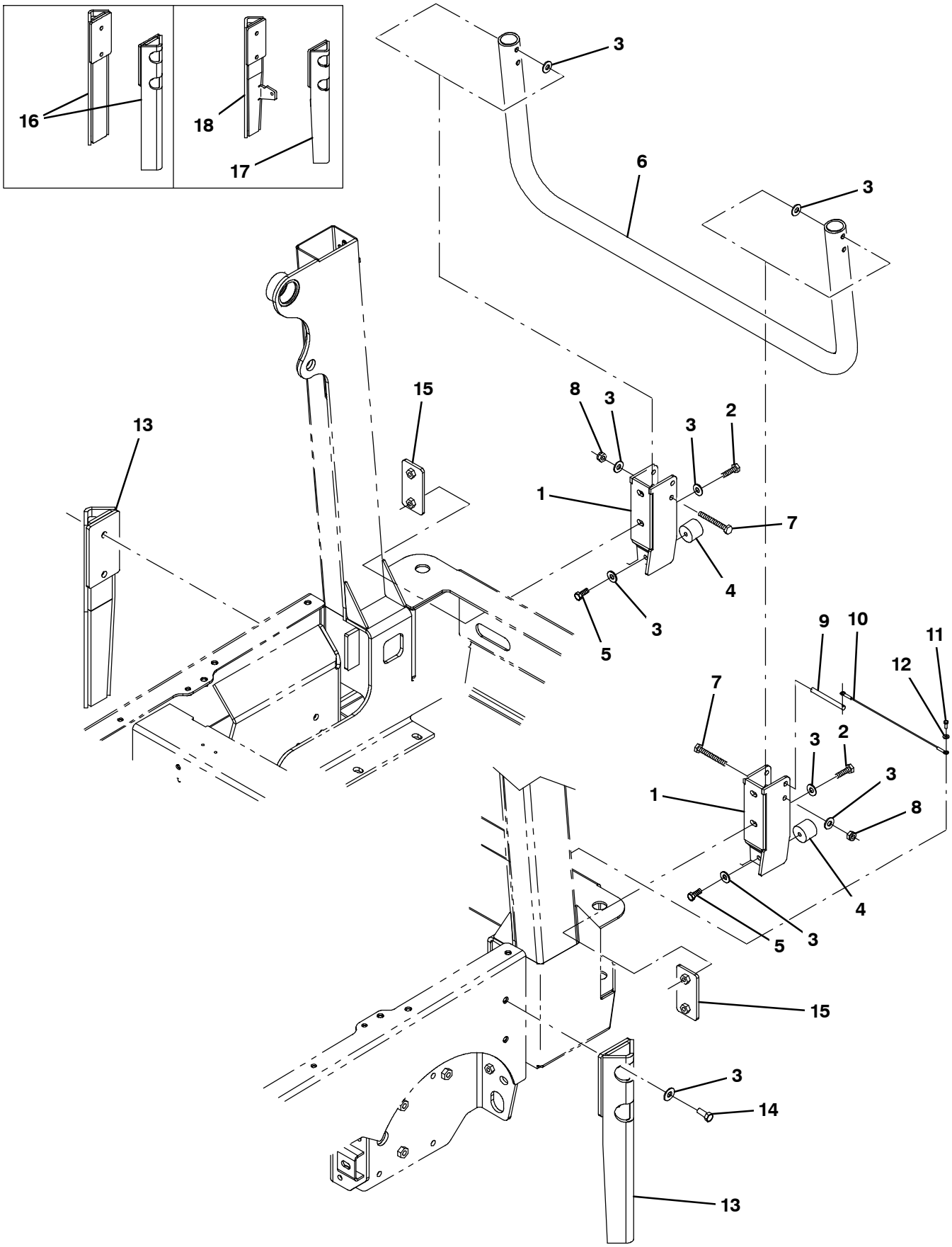

354482

Fig. 33 - Squeegee Guard Kit

	Ref.	Part No.	Serial Number	Description	Qty.
▽		9001338	(000000-)	Guard Kit, Sqge, Ci [M20]	1
▲	1	1027560	(000000-)	Bracket Wldt, Guard, Sqge	2
▲	2	39284	(000000-)	Screw, Hex, M10 X 1.5 X 35, 8.8	4
▲	3	32492	(000000-)	Washer, Flat, 0.38 Std	14
▲	4	1024977	(000000-)	Bumper, Ure, 1.50d 1.25l	2
▲	5	21196	(000000-)	Screw, Hex, .38-16 X 0.88, 5	2
▲	6	1056195	(000000-)	Guard Wldt, Pntd [M20/T20]	1
▲	7	06965	(000000-)	Screw, Hex, M10 X 1.5 X 80, 8.8	2
▲	8	41430	(000000-)	Nut, Hex, Lock, M10 X 1.5, Nl	2
▲	9	369359	(000000-)	Pin, Hitch, .375d X 3.12l, Pl	1
▲	10	57702	(000000-)	Cable, Glv .06d 012.0l .26eye /.26eye	1
▲	11	55845	(000000-)	Screw, Hex, M5 X 0.8 X 16, Fmg	1
▲	12	01683	(000000-)	Washer, Flat, #10, Ss	1
▲	13	1045444	(xxxxxx-)	Guard Wldt, Sqge [M20/T20/M30]	2
▲	14	06962	(000000-)	Screw, Hex, M10 X 1.5 X 45, 8.8	4
▲	15	1029543	(000000-)	Plate, Mtg	2
	16	1025663	(000000-002435)	Guard Wldt, Sqge	2
	17	1040863	(002436-xxxxxx)	Guard Wldt, Sqge [M20/T20 Lh, M30 Rh]	1
	18	1040871	(002436-xxxxxx)	Guard Wldt, Sqge [M20/T20 Rh, M30 Lh]	1

Fig. 34 - Fire Extinguisher Kit

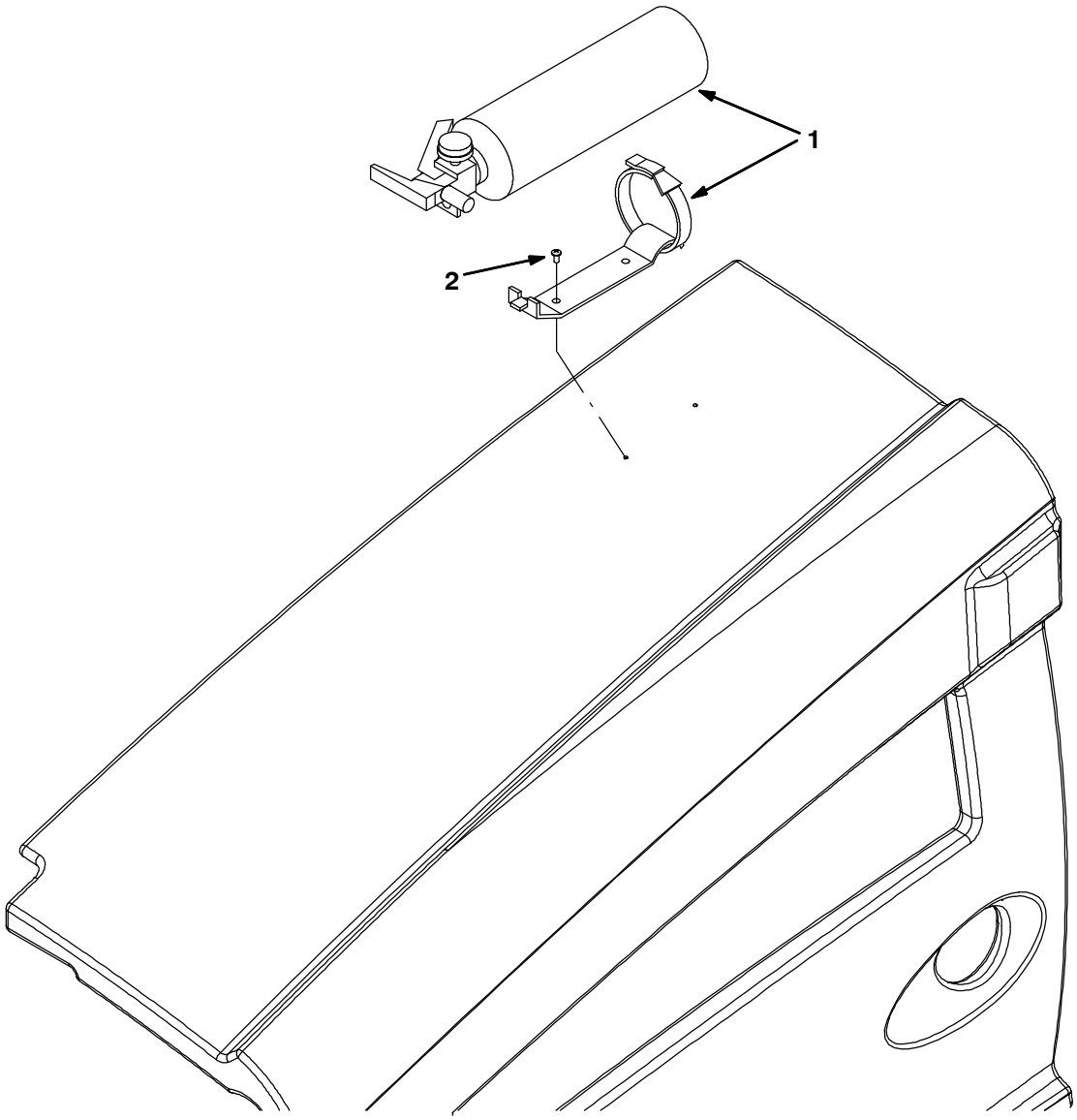

354484

Ref.	Part No.	Serial Number	Description	Qty.
	9001316	(000000-)	Extinguisher Kit, Fire, Ci [M20 And T20]	1
1	25312	(000000-)	Extinguisher, Fire, 2.5 Lb Dry	1
2	382320	(000000-)	Screw, Pan, #12-16 X 0.50, F/ Plstc	2

Fig. 35 - Documentation Group

Ref.	Part No.	Serial Number	Description	Qty.
	331380	(000000-)	Manual, Oprtr [M20 Gas/Lpg En]	1
	1032578	(000000-)	Instr, Maint, Wall Chart [M20]	1
	331382	(000000-)	Manual, Oprtr [M20 Gas/Lpg, Es, Na]	1
	331383	(000000-)	Manual, Oprtr [M20 Gas/Lpg, Fr, Na]	1
	331381	(000000-)	Manual, Parts [M20 Gas/Lpg En]	1
	331385	(000000-)	Manual, Service [M20 En]	1
	1027759	(000000-)	Video, Oprtr, Dvd [W/Checklist M20]	1
	372863	(000000-001999)	Manual, Service, Eng[Gm1.6l Em Cert]	1
	371790	(000000-001999)	Manual, Service, Eng [Gm1.6l]	1
	9003926	(002000-)	Manual, Eng, Cd-Rom [Tier Ii,Gm1.6l]	1
	9006257	(000000-)	Media, Cd-Rom, Training [ec-H2O Tennant]	1

SECTION 4

Contents **Page**

Fig. 1 – Extended Scrub Pump Breakdown, 1021210 4-2
Fig. 2 – Hydraulic Motor Breakdown, 379609 . . . 4-4
Fig. 3 – Hydraulic Pump Breakdown, 1024251 . 4-6
Fig. 4 – Hydraulic Motor Breakdown, 71729 4-8
Fig. 5 – Hydraulic Motor Breakdown, 1029379 . 4-9
Fig. 6 – Hydraulic Motor Breakdown, 53485 . . . 4-10
Fig. 7 – Hydraulic Valve Breakdown, 1018936 . 4-11
Fig. 8 – Hydraulic Valve Breakdown, 1018938 . 4-12
Fig. 9 – Hydraulic Valve Breakdown, 1037805 . 4-14
Fig. 10 – Hydraulic Valve Breakdown, 1020394 . 4-16
Fig. 11 – Hydraulic Valve Breakdown, 1038566 . 4-18
Fig. 12 – Hydraulic Steering Valve Breakdown, 1024260 4-20
Fig. 13 – Metering Solution Pump Breakdown, 73260 4-22
Fig. 14 – Water Pump Breakdown, 1026743 . . . 4-23
Fig. 15 – ec–H20 Module Assembly Breakdown, 9007882 4-24
Fig. 16 – FaST Injector Assembly Breakdown, 9004515 4-26

Fig. 1 - Extended Scrub Pump Breakdown, 1021210

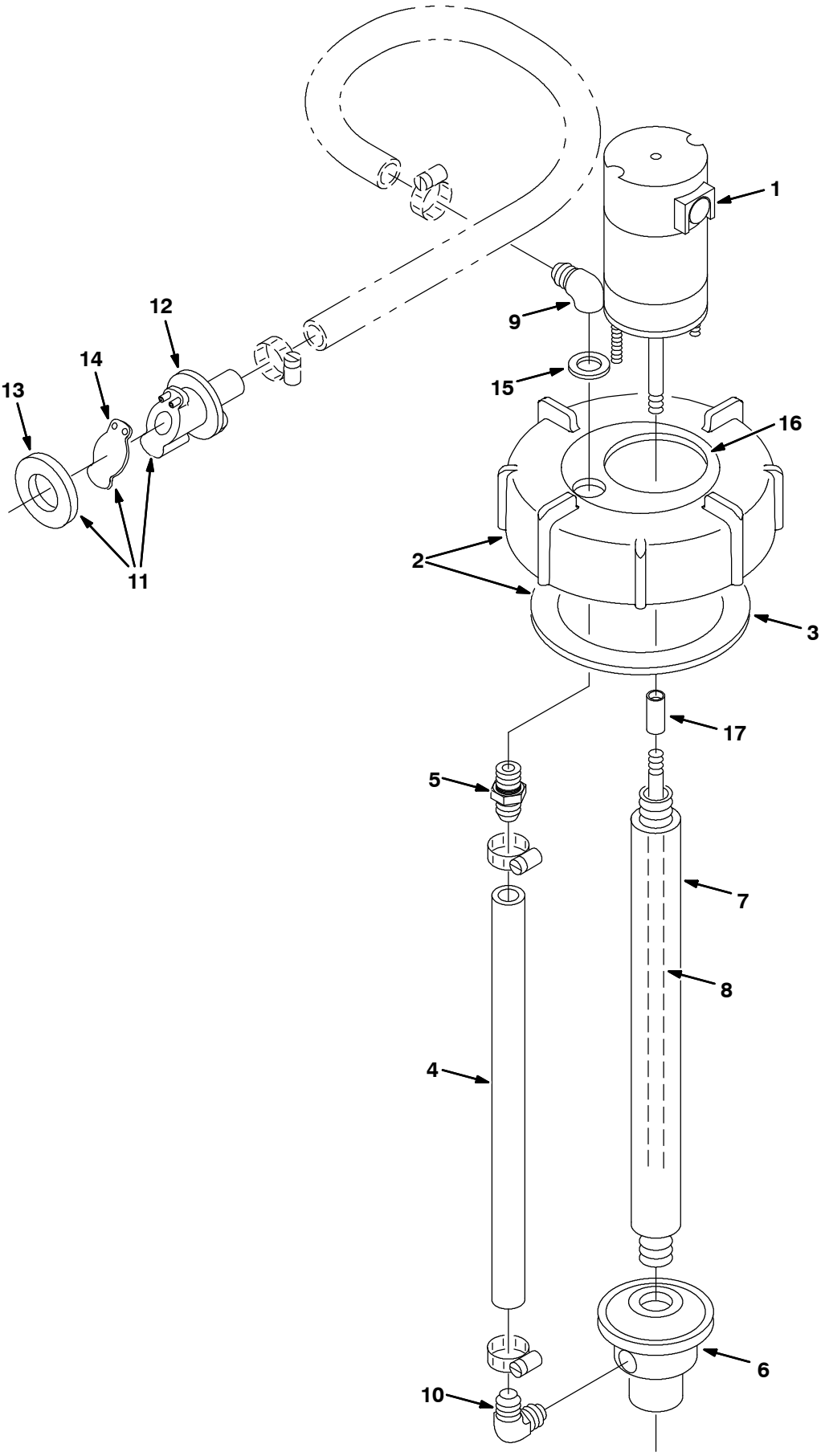

354377 - ALL

Fig. 1 - Extended Scrub Pump Breakdown, 1021210

	Ref.	Part No.	Serial Number	Description	Qty.
▽		1021210	(000000-)	Pump Assy, Column, Es	1
▲▽	1	9002708	(000000-)	Motor, Ele, 12vdc, Pump, Water	1
▲▲		78829	(000000-)	Kit, Brush, Motor, Ele	1
▲▽	2	24358	(000000-)	Cap Assy, Tank, Drain	1
▲▲	3	1031699	(000000-)	Gasket, 4.05id 5.29od .19 [Buna]	1
▲	4	78833	(000000-)	Tube, Vinyl, Pump, Water	1
▲	5	78398	(000000-)	Fitting, Plstc, Str, Bm12/Pm08, Nyl	1
▲	6	78843	(000000-)	Housing Kit, Pump, Water	1
▲	7	78836	(000000-)	Column, Pump, Water	1
▲	8	9002709	(000000-)	Shaft, Pump, Water	1
▲	9	78838	(000000-)	Fitting, E, Gr	1
▲	10	78839	(000000-)	Fitting, Plstc, E90, Pf Bm [Es Pump]	1
▲▽	11	78842	(000000-)	Kit, Valve, Check, Pump, Water	1
▲▲	12	78840	(000000-)	Valve, Check, Pump, Water	1
▲▲	13	73342	(000000-)	Gasket, .25 1.88d 1.0id [Poron]	1
▲▲	14	78841	(000000-)	Flapper, Valve, Pump, Water	1
▲	15	78830	(000000-)	Washer, Rbr	1
▲	16	22790	(000000-)	Insert, Cap, Mount, Es Pump	1
▲	17	23285	(000000-)	Sleeve, Pump, Water	1

Fig. 2 - Hydraulic Motor Breakdown, 379609

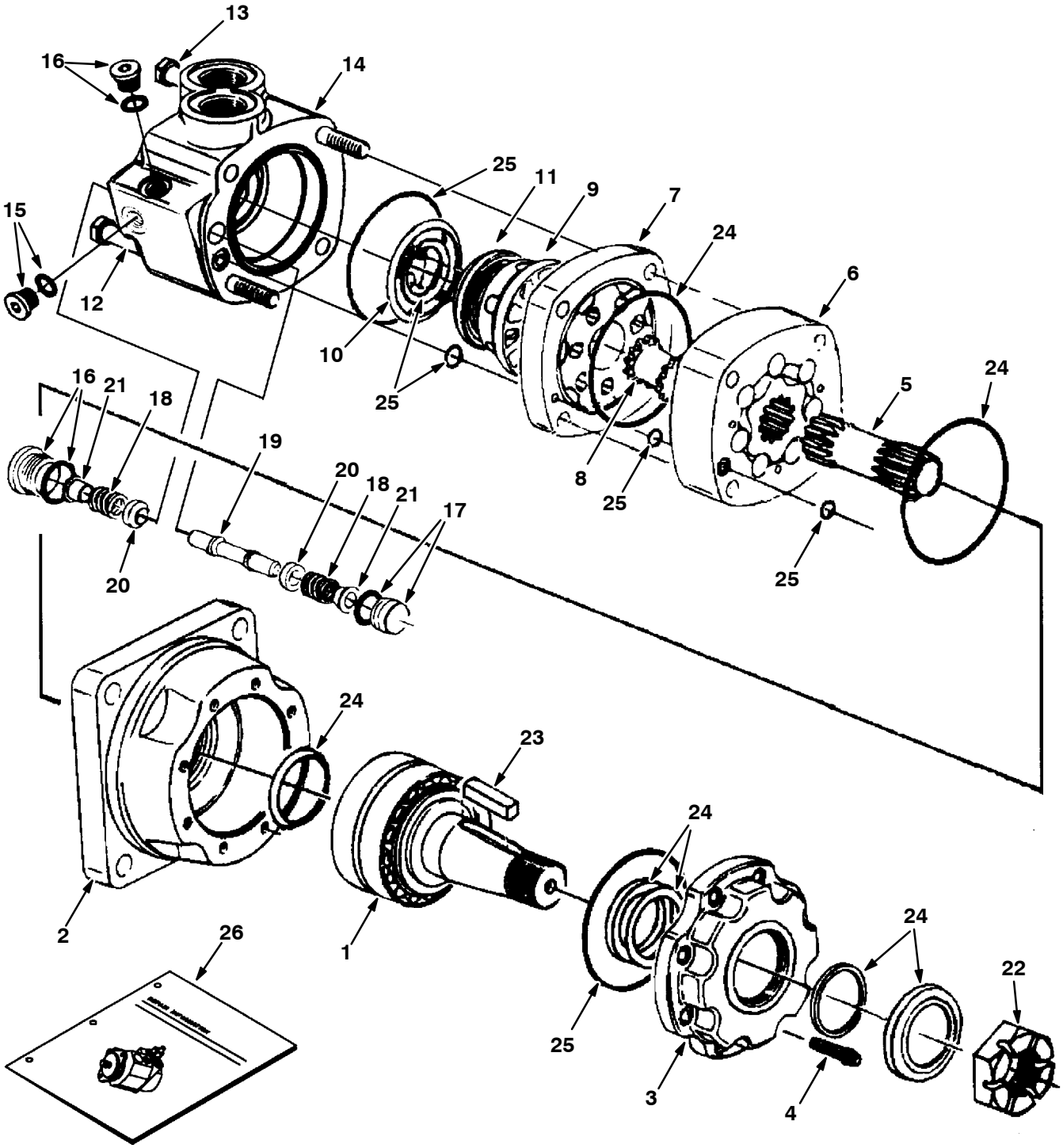

350628-09670

Fig. 2 - Hydraulic Motor Breakdown, 379609

	Ref.	Part No.	Serial Number	Description	Qty.
▽		379609	(000000-)	Motor, Hyd, Gear, [Int], 19.0 X 3000	1
▲	1	74165	(000000-)	Shaft, Motor, Hyd	1
▲	2	74166	(000000-)	Housing, Brg, Motor, Hyd	1
▲	3	74167	(000000-)	Retainer, Motor, Hyd	1
▲	4	74168	(000000-)	Screw, Cap, Motor, Hyd	8
▲	5	37616	(000000-)	Drive, Motor, Hyd	1
▲	6	37756	(000000-)	Geroler, Motor, Hyd	1
▲	7	74122	(000000-)	Plate, Valve, Motor, Hyd	1
▲	8	52405	(000000-)	Valve, Motor, Hyd	1
▲	9	74123	(000000-)	Valve, Motor, Hyd	1
▲	10	34178	(000000-)	Spring, Motor, Hyd	2
▲	11	38968	(000000-)	Ring, Motor, Hyd	1
▲	12	74125	(000000-)	Bolt, Motor, Hyd	3
▲	13	38255	(000000-)	Bolt, Motor, Hyd	1
▲	14	373297	(000000-)	Housing, Valve	1
▲	15	373298	(000000-)	Plug	1
▲	16	373260	(000000-)	Plug, Pump, Hyd, Gear	2
▲	17	373299	(000000-)	Plug	1
▲	18	373291	(000000-)	Spring	2
▲	19	373217	(000000-)	Piston, Pump, Hyd, Gear	1
▲	20	373226	(000000-)	Poppet, Pump, Hyd, Gear	2
▲	21	373236	(000000-)	Sleeve, Dashpo, Pump, Hyd, Gear	2
▲	22	45622	(000000-)	Nut, Motor, Hyd	1
▲	23	45623	(000000-)	Key, Motor, Hyd	1
▲	24	79828	(000000-)	Kit, Seal, Motor, Hyd	1
▲	25	33580	(000000-)	Kit, Seal, Motor, Hyd	1
	26	79729	(000000-)	Instr, Repair, Motor, Hyd, Gear	1

Fig. 3 - Hydraulic Pump Breakdown, 1024251

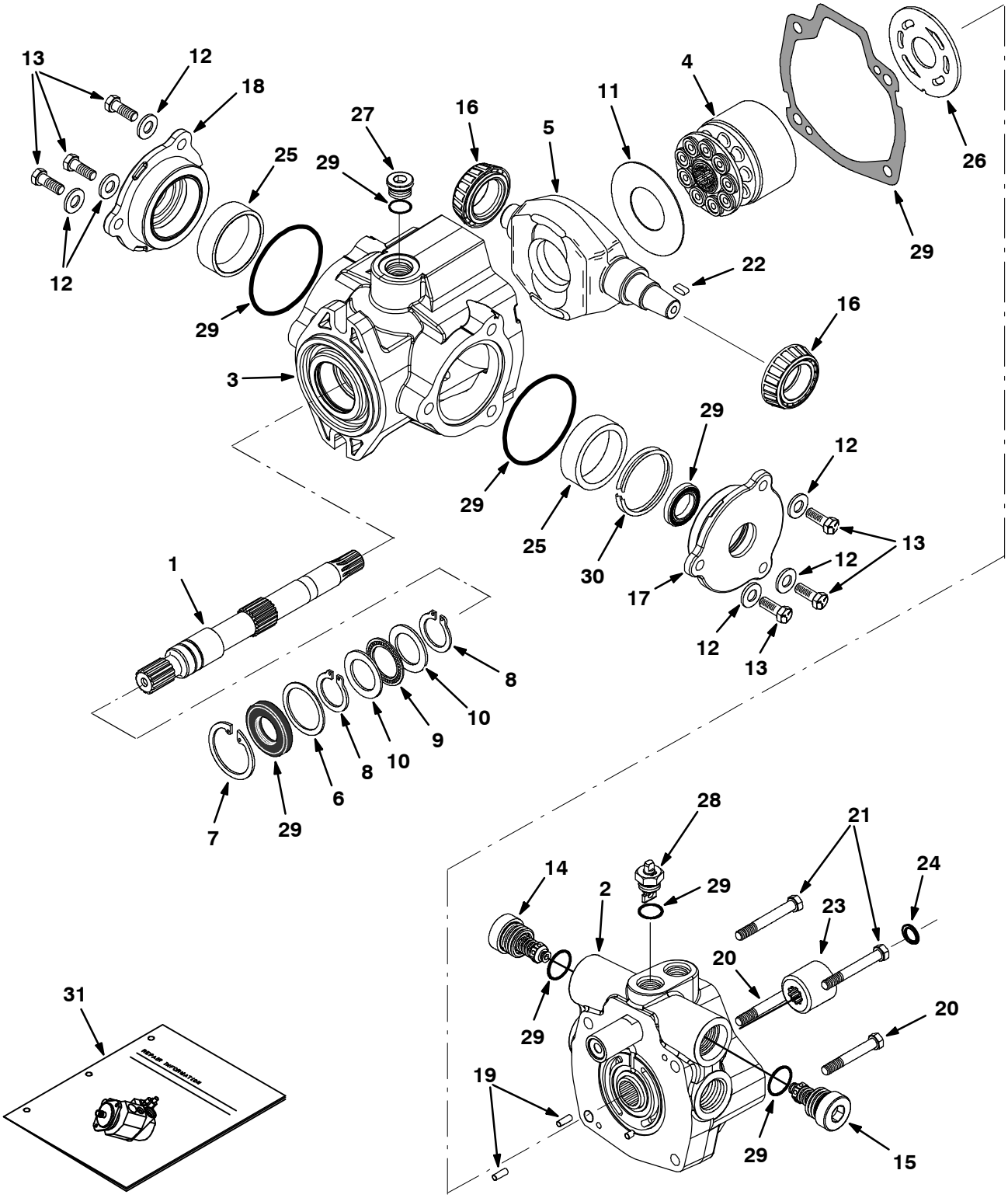

ALL

Fig. 3 - Hydraulic Pump Breakdown, 1024251

	Ref.	Part No.	Serial Number	Description	Qty.
▽		1024251	(000000-)	Pump, Hyd, Piston, Var, 1.24 4000, Cw	1
▲	1	373681	(000000-)	Shaft, Pump	1
▲	2	373427	(000000-)	Cover, End	1
▲	3	373389	(000000-)	Housing	1
▲	4	02706	(000000-)	Pump Kit, Hyd, Rotating [Cessna]	1
▲	5	373493	(000000-)	Plate, Cam	1
▲	6	70096	(000000-)	Washer, Flat, Pump, Hyd	1
▲	7	55926	(000000-)	Ring, Retaining, Pump, Hyd	1
▲	8	373434	(000000-)	Ring, Retaining	2
▲	9	74225	(000000-)	Bearing, Thrust, Pump, Hyd	1
▲	10	74226	(000000-)	Race, Brg, Pump, Hyd	2
▲	11	373327	(000000-)	Insert, Plt, Cam, Pump, Hyd	1
▲	12	373391	(000000-)	Washer, Pump, Hyd [En]	6
▲	13	373346	(000000-)	Screw, Cap	6
▲	14	373494	(000000-)	Valve, Relief, 4000 Psi	1
▲	15	373678	(000000-)	Valve, Relief, 3000 Psi	1
▲	16	373317	(000000-)	Bearing, Cone, Pump, Hyd	2
▲	17	373393	(000000-)	Plate, Cover	1
▲	18	373394	(000000-)	Plate, Cover	1
▲	19	70100	(000000-)	Pin, Dowel, Pump, Hyd	2
▲	20	373347	(000000-)	Screw, Cap	2
▲	21	373348	(000000-)	Screw, Cap	2
▲	22	74237	(000000-)	Key, Shaft, Pump, Hyd	1
▲	23	373679	(000000-)	Coupler, Pump	1
▲	24	373680	(000000-)	Ring, Lock	1
▲	25	373395	(000000-)	Bearing, Cup	2
▲	26	74180	(000000-)	Plate, Valve, Pump, Hyd	1
▲	27	13907	(000000-)	Fitting, Hyd, Plug, Om08	1
▲	28	373413	(000000-)	Actuator, Valve, By-Pass [En]	1
▲	29	373398	(000000-)	Seal Kit, Pump, Hyd	1
▲	30	373402	(000000-)	Shim Kit	1
	31	373429	(000000-)	Instr, Repair, Pump	1

Fig. 4 - Hydraulic Motor Breakdown, 71729

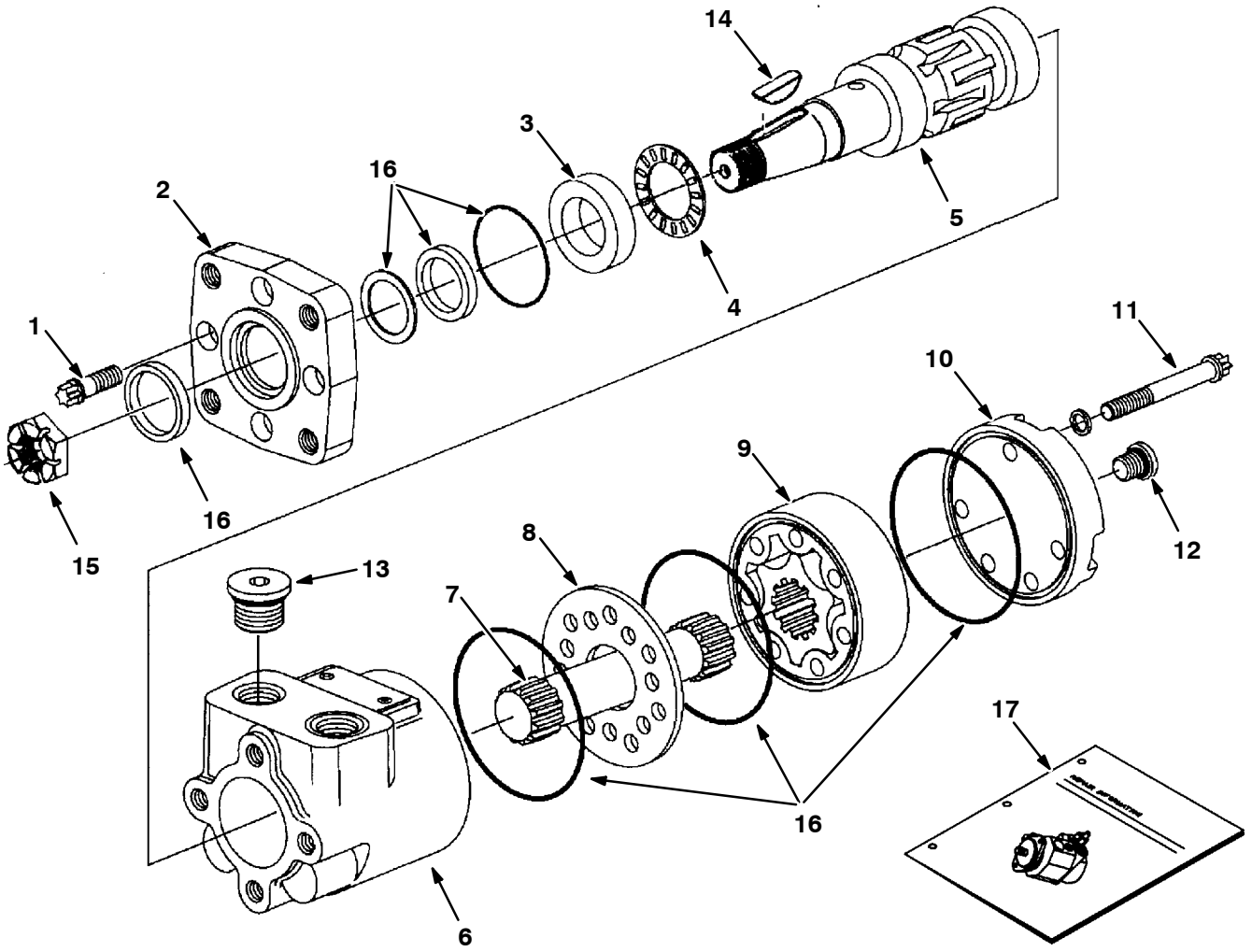

09606-09670 - ALL

	Ref.	Tennant Part No.	Manufacturer Serial Number	Description	Qty.
▽		71729	(000000-)	Motor, Hyd Gear In 4.5 B 1500	1
▲	1	37555	(000000-)	Screw	4
▲	2	31354	(000000-)	Flange Mounting	1
▲	3	16695	(000000-)	Race Thrust	1
▲	4	45628	(000000-)	Thrust Bearing	1
▲	5	31375	(000000-)	Shaft, Output	1
▲	6	74100	(000000-)	Housingl	1
▲	7	31379	(000000-)	Drive	1
▲	8	74094	(000000-)	Spacer Plate	1
▲	9	31383	(000000-)	Gerotor Set	1
▲	10	74095	(000000-)	End Cap	1
▲	11	65241	(000000-)	Cap Screw	5
▲	12	74098	(000000-)	Plug #4	1
▲	13	74099	(000000-)	Plug #10	2
▲	14	00500-15	(000000-)	Key-Wdruff 0.25 1.00	1
▲	15	39527	(000000-)	Nut-Hxslot .75-16 Pltd	1
▲	16	61490	(000000-)	Seal Replmt Kit	1
▲	17	74250	(000000-)	Instr. Repair Info, Motor	1

Fig. 5 - Hydraulic Motor Breakdown, 1029379

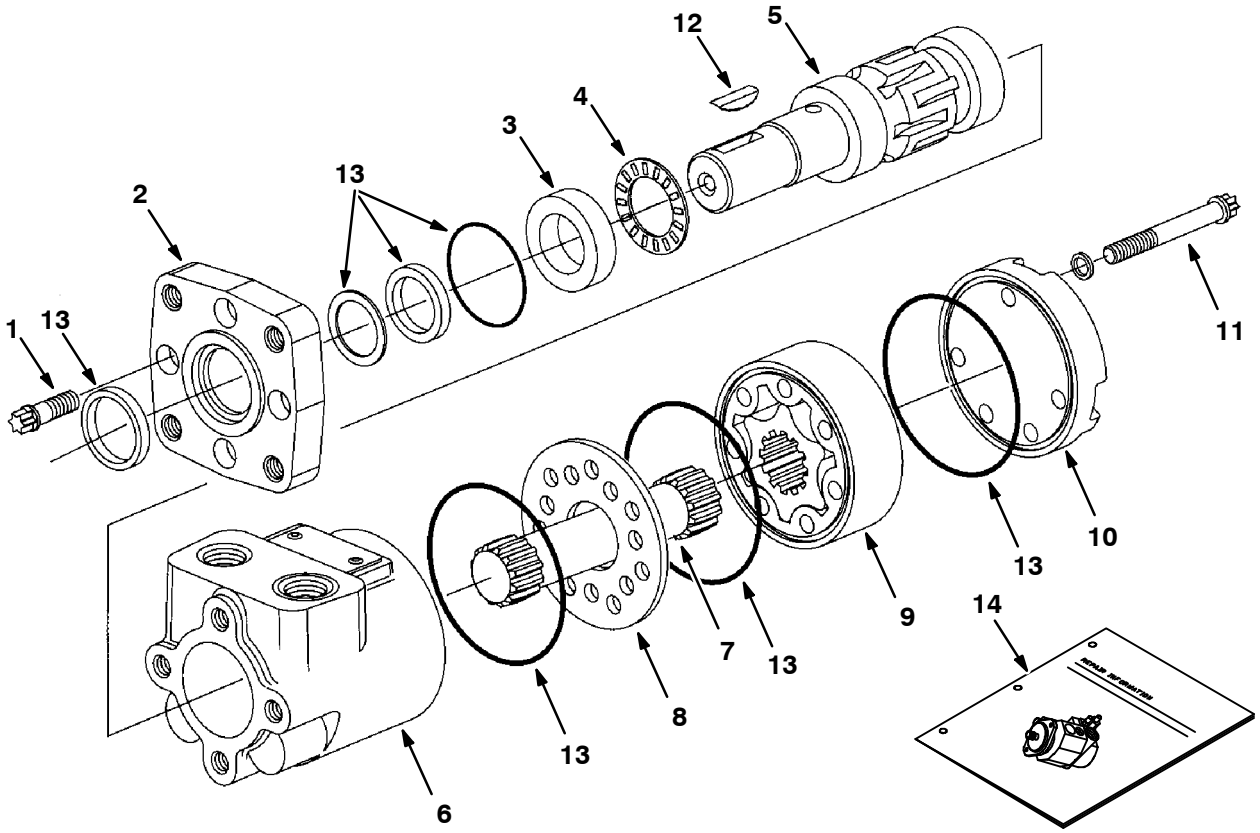

10859-09670 - ALL

	Ref.	Part No.	Serial Number	Description	Qty.
▽		1029379	(000000-)	Motor, Hyd, Gear, Int 08.9 Bi-Dir 2500	1
▲	1	37555	(000000-)	Screw, Motor, Hyd [En]	4
▲	2	31354	(000000-)	Flange, Motor, Hyd [En]	1
▲	3	16695	(000000-)	Ace, Thrust, Motor, Hyd [En]	1
▲	4	45628	(000000-)	Bearing, Thrust	1
▲	5	28854	(000000-)	Shaft, Output, Motor, Hyd [En]	1
▲	6	74100	(000000-)	Housing, Motor, Hyd [En]	1
▲	7	21955	(000000-)	Drive [Cl]	1
▲	8	74094	(000000-)	Plate, Spacer, Motor, Hyd [En]	1
▲	9	21956	(000000-)	Gerotor Set [Cl]	1
▲	10	65230	(000000-)	End Cap, Motor, Hyd [En]	1
▲	11	21958	(000000-)	Cap Screw Cl	5
▲	12	00500-15	(000000-)	Key, Woodruff, 0.25 1.00 [Asa#0808]	1
▲	13	61490	(000000-)	Seal Kit, Motor [Cl]	1
▲	14	74250	(000000-)	Instr, Motor, Hyd, Repair [En]	1

Fig. 6 - Hydraulic Motor Breakdown, 53485

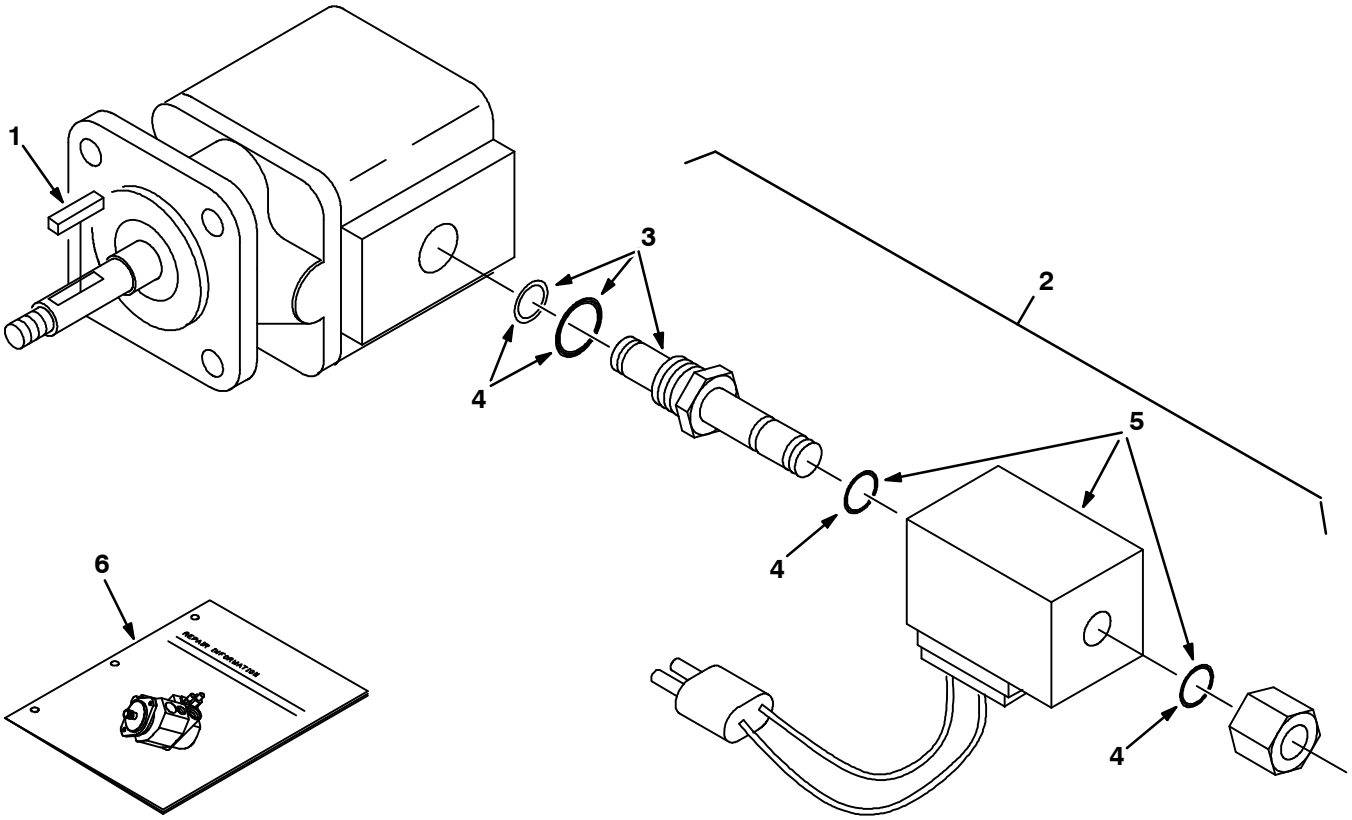

07490 - 09670

	Ref.	Part No.	Serial Number	Description	Qty.
▽		53485	(000000-)	Motor, Hyd, Gear, Ext 0.19 Rh 3000	1
▲		74233	(000000-)	Kit, Seal, Motor, Hyd, Gear[Barns]	1
▲	1	00966	(000000-)	Key, Sq, 0.12 X 0.12, 0.75l	1
▲▽	2	54095	(000000-)	Valve, Hyd Cartridge 10no/-0	1
▲▲	3	59378	(000000-)	Valve Stem, N.O.Valve, Hyd	1
▲▲	4	48813	(000000-)	Kit, Seal, Valve, Hyd [Cec]	1
▲▲	5	35493	(000000-)	Solenoid, 12v, Valve, Hyd [Cec]	1
	6	IB3614	(000000-)	Instr, Seal Kit, Motor	1

Fig. 7 - Hydraulic Valve Breakdown, 1018936

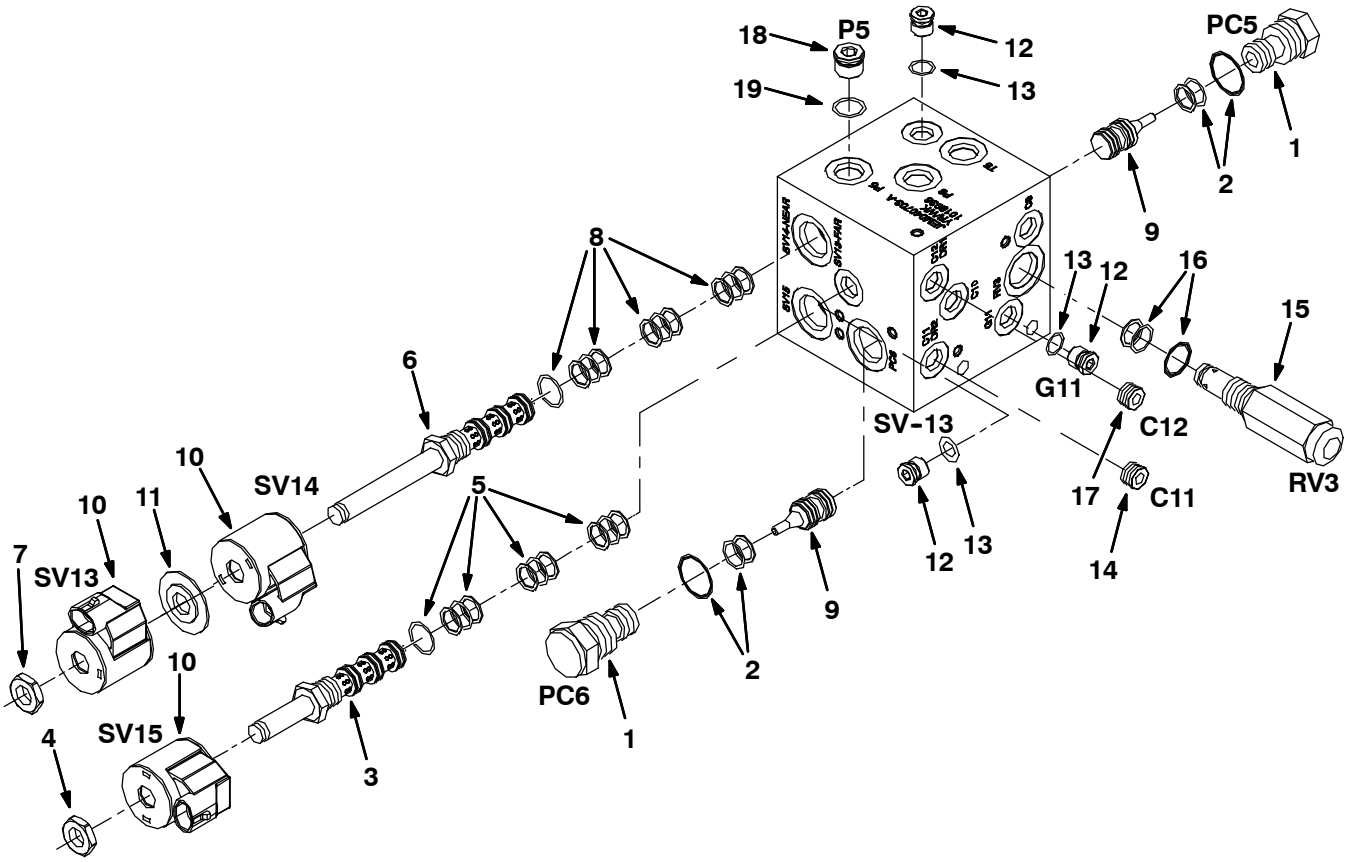

ALL

	Ref.	Part No.	Serial Number	Description	Qty.
▽		1018936	(000000–)	Valve, Cntrl, Hyd [M20]	1
▲▽	1	373656	(000000–)	Valve, Check	2
▲▲	2	373647	(000000–)	Seal Kit, Cartridge	1
▲▽	3	373657	(000000–)	Stem, Valve, Hyd, 4w2p	1
▲▲	4	373648	(000000–)	Nut, Coil, F/#8	1
▲▲	5	373647	(000000–)	Seal Kit, Cartridge	1
▲▽	6	373637	(000000–)	Valve, Cntrl, Solenoid	1
▲▲	7	373648	(000000–)	Nut, Coil, F/#8	1
▲▲	8	373647	(000000–)	Seal Kit, Cartridge	1
▲	9	373658	(000000–)	Spool, Pilot, Hyd	2
▲	10	373640	(000000–)	Solenoid, #8, 12vdc	3
▲	11	373639	(000000–)	Spacer, Coil, #8	1
▲▽	12	74098	(000000–)	Fitting, Hyd, Plug, Om04	3
▲▲	13	77003	(000000–)	Seal, Org, .072 X 00.35id #04	1
▲	14	373633	(000000–)	Plug, Orifice, Valve, Hyd, .040	1
▲▽	15	373659	(000000–)	Valve, Hyd, Relief	1
▲▲	16	373647	(000000–)	Seal Kit, Cartridge	1
▲	17	373660	(000000–)	Plug, Orifice, Valve, Hyd, .030	1
▲▽	18	13904	(000000–)	Fitting, Plug, Org, #6, Valve [Cec]	1
▲▲	19	77005	(000000–)	Seal, Org, .078 X 00.47id #06	1

Fig. 8 - Hydraulic Valve Breakdown, 1018938

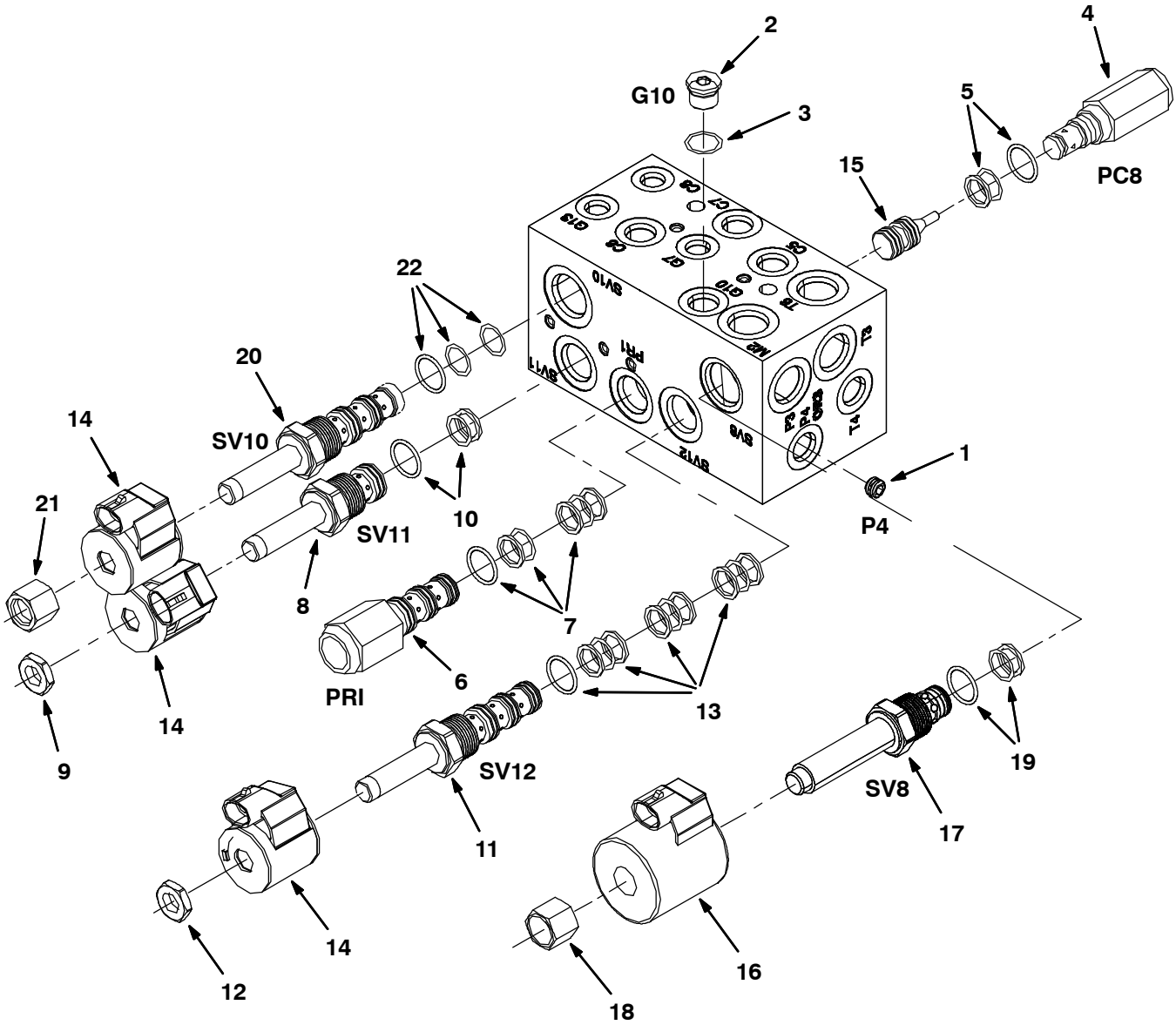

ALL

Fig. 8 - Hydralic Valve Breakdown, 1018938

	Ref.	Part No.	Serial Number	Description	Qty.
▽		1018938	(000000–)	Valve, Cntrl, Hyd [M20 And T20]	1
▲	1	373633	(000000–)	Plug, Orifice, Valve, Hyd, .040	1
▲▽	2	13904	(000000–)	Fitting, Plug, Org, #6, Valve [Cec]	1
▲▲	3	77005	(000000–)	Seal, Org, .078 X 00.47id #06	1
▲▽	4	373656	(000000–)	Valve, Check	1
▲▲	5	373647	(000000–)	Seal Kit, Cartridge	1
▲▽	6	373661	(000000–)	Valve, Relief	1
▲▲	7	373647	(000000–)	Seal Kit, Cartridge	1
▲▽	8	373662	(000000–)	Stem, Valve, Hyd	1
▲▲	9	373648	(000000–)	Nut, Coil, F/#8	1
▲▲	10	373647	(000000–)	Seal Kit, Cartridge	1
▲▽	11	373657	(000000–)	Stem, Valve, Hyd, 4w2p	1
▲▲	12	373648	(000000–)	Nut, Coil, F/#8	1
▲▲	13	373647	(000000–)	Seal Kit, Cartridge	1
▲	14	373640	(000000–)	Solenoid, #8, 12vdc	3
▲	15	373658	(000000–)	Spool, Pilot, Hyd	1
▲	16	373642	(000000–)	Solenoid, #10, 12vdc	1
▲▽	17	373663	(000000–)	Valve, Stem, No	1
▲▲	18	373670	(000000–)	Nut, Solenoid	1
▲▲	19	373646	(000000–)	Seal Kit, Cartridge	1
▲▽	20	373664	(000000–)	Cartridge, Psi Cntrl, Valve, Hyd	1
▲▲	21	373673	(000000–)	Nut, Solenoid	1
▲▲	22	373672	(000000–)	Seal Kit, Cartridge	1

Fig. 9 - Hydraulic Valve Breakdown, 1037805

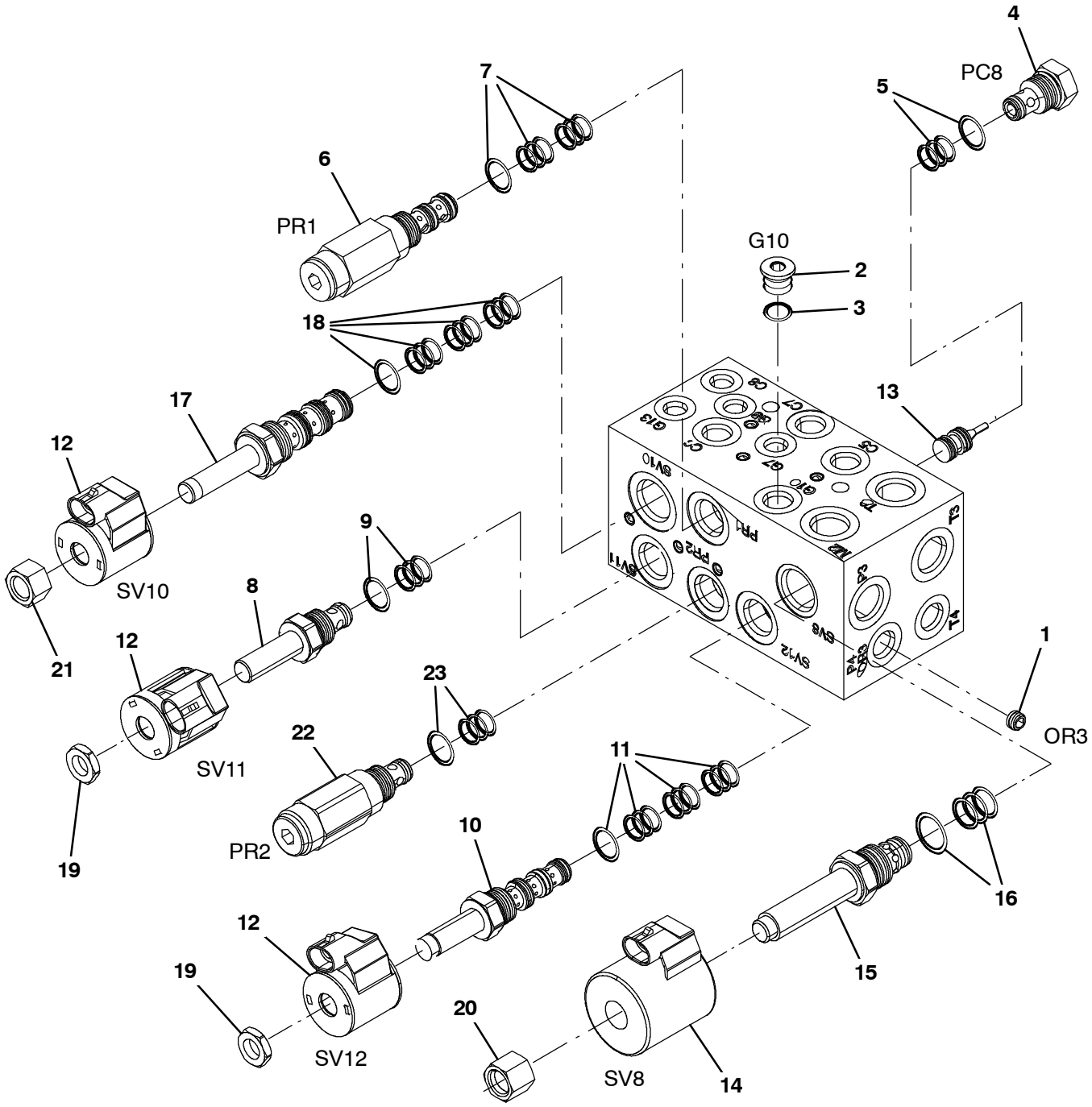

ALL

Fig. 9 - Hydralic Valve Breakdown, 1037805

	Ref.	Part No.	Serial Number	Description	Qty.
▽		1037805	(000000–)	Valve, Cntrl, Hyd, Solenoid, 03/16gpm	1
▲	1	373633	(000000–)	Plug, Orifice, Valve, Hyd, .040	1
▲▽	2	13904	(000000–)	Fitting, Plug, Org, #6, Valve [Cec]	1
▲▲	3	77005	(000000–)	Seal, Org, .078 X 00.47id 06	1
▲▽	4	373656	(000000–)	Valve, Check	1
▲▲	5	373647	(000000–)	Seal Kit, Cartridge	1
▲▽	6	373683	(000000–)	Valve, Relief	1
▲▲	7	373647	(000000–)	Seal Kit, Cartridge	1
▲▽	8	373662	(000000–)	Stem, Valve, Hyd	1
▲▲	9	373647	(000000–)	Seal Kit, Cartridge	1
▲▽	10	373657	(000000–)	Stem, Valve, Hyd [4w2p]	1
▲▲	11	373647	(000000–)	Seal Kit, Cartridge	1
▲	12	373640	(000000–)	Solenoid, #8, 12vdc	1
▲	13	373658	(000000–)	Spool, Pilot, Hyd	1
▲	14	373642	(000000–)	Solenoid, #10, 12vdc	3
▲▽	15	373663	(000000–)	Valve, Stem, No	1
▲▲	16	373646	(000000–)	Seal Kit, Cartridge	1
▲▽	17	373664	(000000–)	Cartridge, Psi Cntrl, Valve, Hyd	1
▲▲	18	373672	(000000–)	Seal Kit, Cartridge	1
▲	19	373684	(000000–)	Nut, Coil, Nyl Patch	1
▲	20	373685	(000000–)	Nut, Coil, Nyl Patch	1
▲	21	373686	(000000–)	Nut, Coil, Nyl Patch	1
▲▽	22	1047625	(000000–)	Valve, Relief	1
▲▲	23	373647	(000000–)	Seal Kit, Cartridge	1

Fig. 10 - Hydraulic Valve Breakdown, 1020394

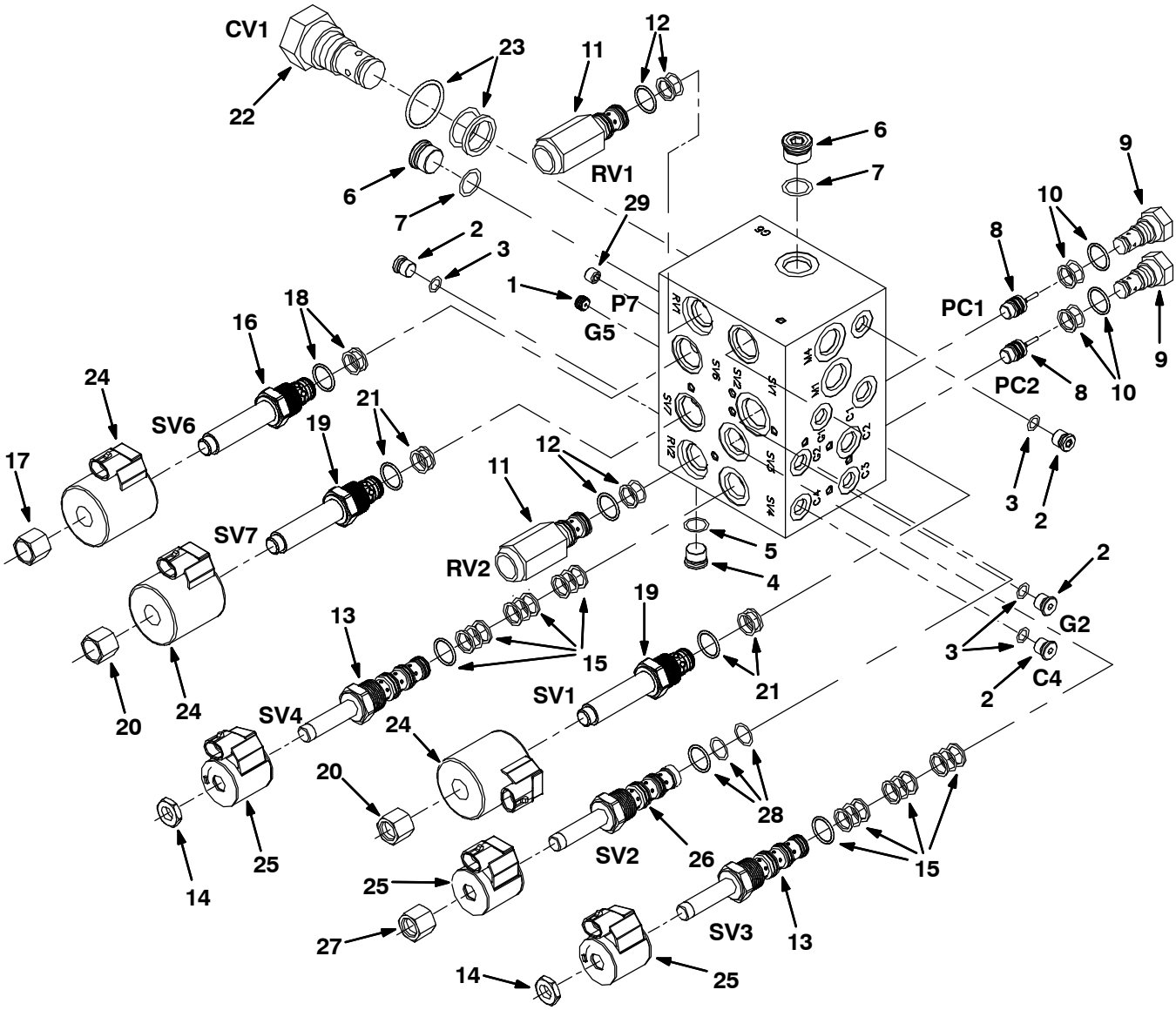

ALL

Fig. 10 - Hydraulic Valve Breakdown, 1020394

	Ref.	Part No.	Serial Number	Description	Qty.
▽		1020394	(000000–)	Valve, Cntrl, Hyd	1
▲	1	373665	(000000–)	Plug, Orifice, Valve, Hyd, .046	1
▲▽	2	74098	(000000–)	Fitting, Hyd, Plug, Om04	4
▲▲	3	77003	(000000–)	Seal, Org, .072 X 00.35id #04	1
▲▽	4	13904	(000000–)	Fitting, Plug, Org, #6, Valve [Cec]	1
▲▲	5	77005	(000000–)	Seal, Org, .078 X 00.47id #06	1
▲▽	6	13907	(000000–)	Fitting, Hyd, Plug, Om08	2
▲▲	7	77006	(000000–)	Seal, Org, .087 X 00.64id #08	2
▲	8	373658	(000000–)	Spool, Pilot, Hyd	2
▲▽	9	373631	(000000–)	Valve, Check	2
▲▲	10	373647	(000000–)	Seal Kit, Cartridge	1
▲▽	11	373666	(000000–)	Valve, Relief	2
▲▲	12	373647	(000000–)	Seal Kit, Cartridge	1
▲▽	13	373657	(000000–)	Stem, Valve, Hyd, 4w2p	2
▲▲	14	373648	(000000–)	Nut, Coil, F/#8	1
▲▲	15	373647	(000000–)	Seal Kit, Cartridge	1
▲▽	16	373667	(000000–)	Stem, Valve, Hyd	1
▲▲	17	373648	(000000–)	Nut, Coil, F/#8	1
▲▲	18	373646	(000000–)	Seal Kit, Cartridge	1
▲▽	19	373663	(000000–)	Valve, Stem, No	2
▲▲	20	373670	(000000–)	Nut, Solenoid	1
▲▲	21	373646	(000000–)	Seal Kit, Cartridge	1
▲▽	22	373668	(000000–)	Valve, Check	1
▲▲	23	373671	(000000–)	Seal Kit, Cartridge	1
▲	24	373642	(000000–)	Solenoid, #10, 12vdc	3
▲	25	373640	(000000–)	Solenoid, #8, 12vdc	3
▲▽	26	373664	(000000–)	Cartridge, Psi Cntrl, Valve, Hyd	1
▲▲	27	373673	(000000–)	Nut, Solenoid	1
▲▲	28	373672	(000000–)	Seal Kit, Cartridge	1
▲	29	373669	(000000–)	Plug, Orifice, Valve, Hyd, .063	1

Fig. 11 - Hydraulic Valve Breakdown, 1038566

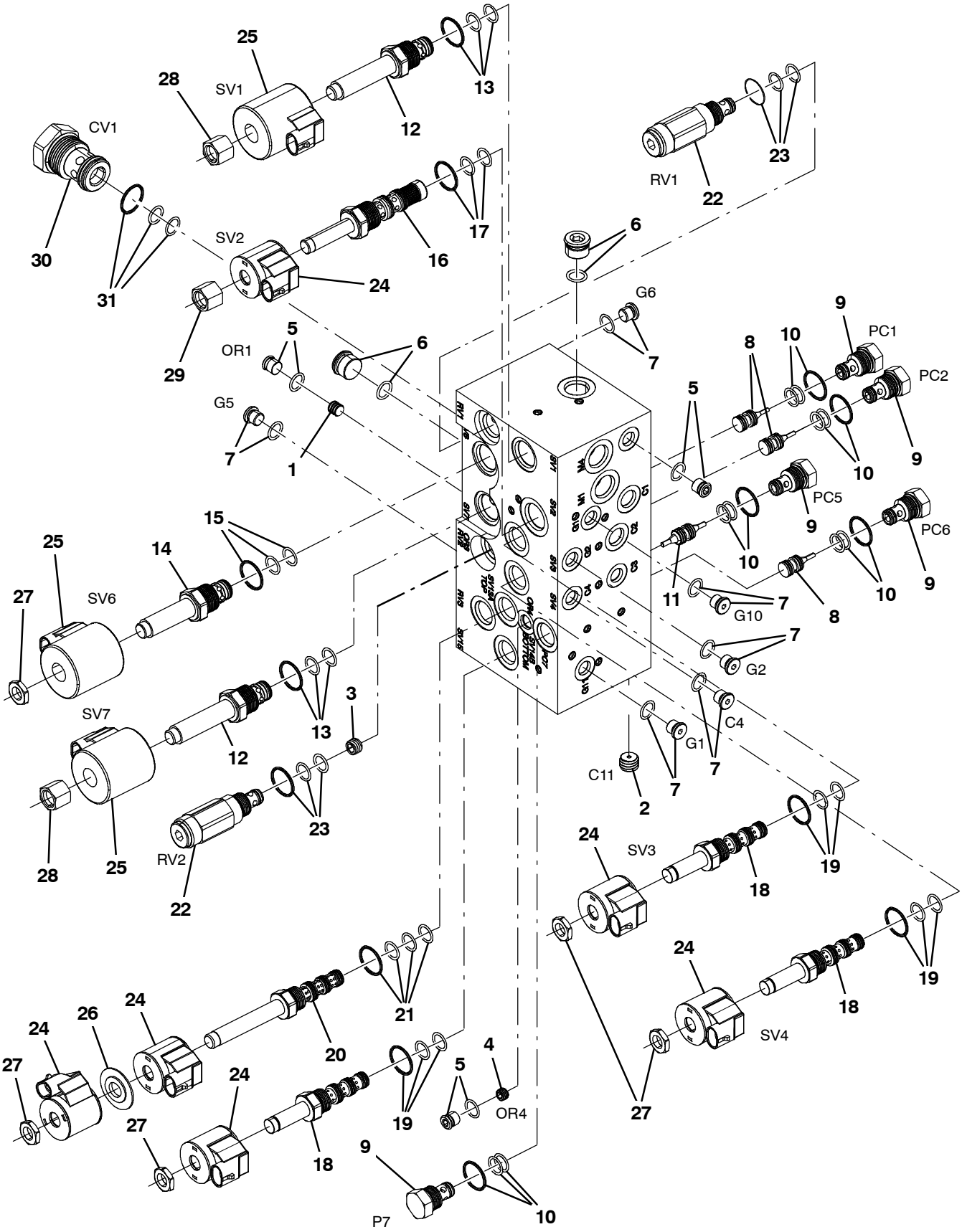

354643

Fig. 11 - Hydraulic Valve Breakdown, 1038566

	Ref.	Part No.	Serial Number	Description	Qty.
▽		1038566	(000000-)	Valve, Hyd, Solenoid, 12vdc	1
▲	1	373665	(000000-)	Plug, Orifice, Valve, Hyd, .046	1
▲	2	373633	(000000-)	Plug, Orifice, Valve, Hyd, .040	1
▲	3	9004475	(000000-)	Plug Orifice, Valve, Hyd, .140	1
▲	4	373660	(000000-)	Plug, Orifice, Valve, Hyd, .030	1
▲	5	74098	(000000-)	Fitting, Hyd, Plug, Om04	1
▲	6	13904	(000000-)	Fitting, Plug, Org, #6, Valve [Cec]	2
▲	7	74098	(000000-)	Fitting, Hyd, Plug, Om04	6
▲	8	373658	(000000-)	Spool, Pilot, Hyd	3
▲▽	9	373656	(000000-)	Valve, Check	5
▲▲	10	373647	(000000-)	Seal Kit, Cartridge	1
▲	11	373688	(000000-)	Spool, Pilot, Dual, Hyd	1
▲▽	12	373663	(000000-)	Valve, Stem, No	2
▲▲	13	373671	(000000-)	Seal Kit, Cartridge	1
▲▽	14	373667	(000000-)	Stem, Valve, Hyd	1
▲▲	15	373671	(000000-)	Seal Kit, Cartridge	1
▲▽	16	373664	(000000-)	Cartridge, Psi Cntrl, Valve, Hyd	1
▲▲	17	373672	(000000-)	Seal Kit, Cartridge	1
▲▽	18	373657	(000000-)	Stem, Valve, Hyd [4w2p]	3
▲▲	19	373647	(000000-)	Seal Kit, Cartridge	1
▲▽	20	373637	(000000-)	Valve, Cntrl, Solenoid	1
▲▲	21	373671	(000000-)	Seal Kit, Cartridge	1
▲▽	22	373666	(000000-)	Valve, Relief	2
▲▲	23	373647	(000000-)	Seal Kit, Cartridge	1
▲	24	373640	(000000-)	Solenoid, #8, 12vdc	6
▲	25	373642	(000000-)	Solenoid, #10, 12vdc	3
▲	26	373639	(000000-)	Spacer, Coil, #8	1
▲	27	373684	(000000-)	Nut, Coil, Nyl Patch	5
▲	28	373685	(000000-)	Nut, Coil, Nyl Patch	2
▲	29	373686	(000000-)	Nut, Coil, Nyl Patch	1
▲	30	373668	(000000-)	Valve, Check	1
▲	31	373671	(000000-)	Seal Kit, Cartridge	1

Fig. 12 - Hydraulic Steering Valve Breakdown, 1024260

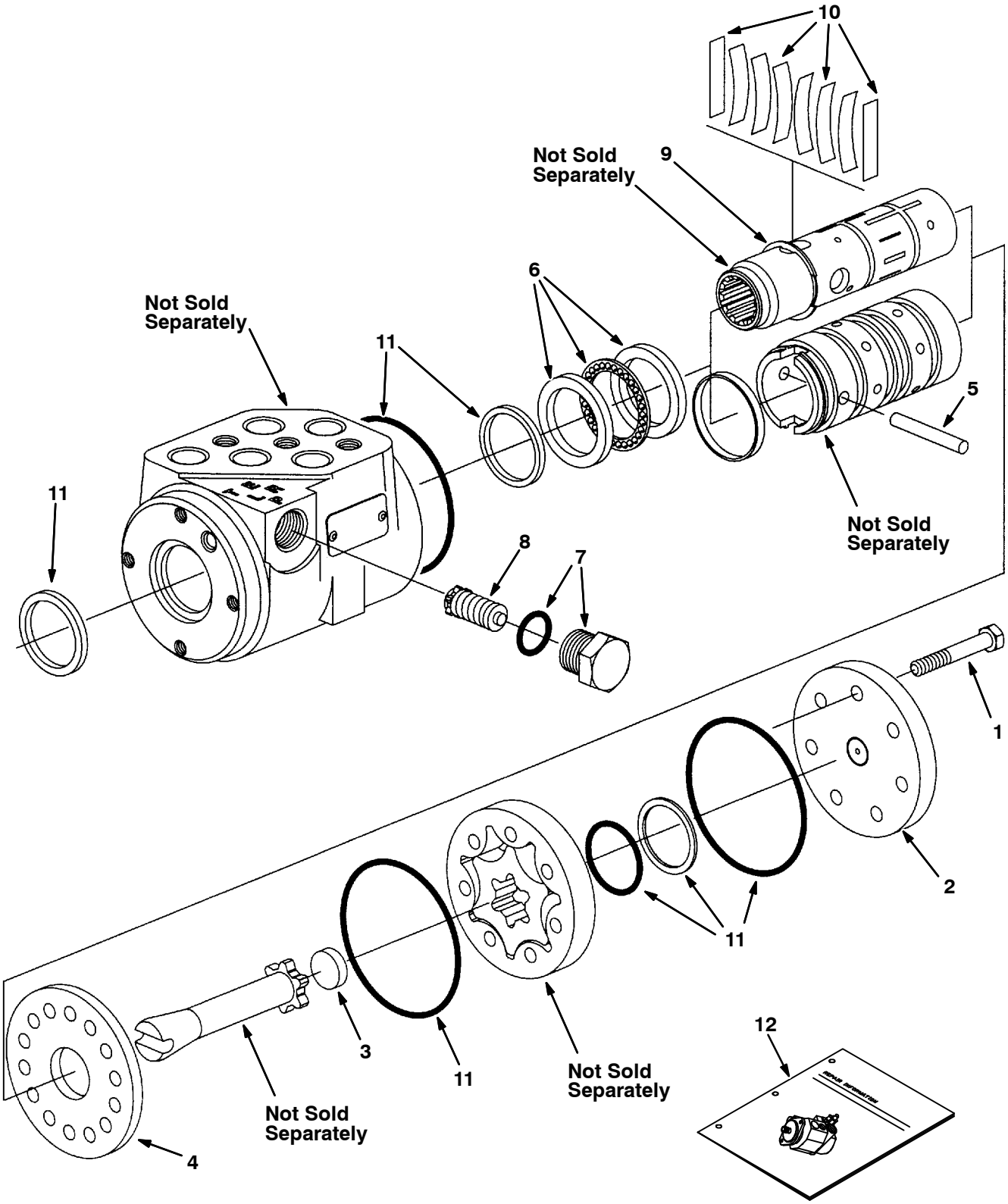

Fig. 12 - Hydraulic Steering Valve Breakdown, 1024260

	Ref.	Part No.	Serial Number	Description	Qty.
▽		1024260	(000000-)	Steer-Control, Hyd05, 06.1 2030	1
▲	1	74183	(000000-)	Screw, Valve, Steering	7
▲	2	74185	(000000-)	Cap, End, Valve, Steering	1
▲	3	74193	(000000-)	Spacer, Valve, Steering	1
▲	4	74222	(000000-)	Plate, Wear, Steering Valve	1
▲	5	74232	(000000-)	Pin, Valve, Steering	1
▲	6	21935	(000000-)	Bearing Kit [Cl]	1
▲	7	21933	(000000-)	Plug Assy [Cl]	1
▲	8	21934	(000000-)	Valve Assy, Relief [Cl]	1
▲	9	74243	(000000-)	Ring, Retainer, Steering Valve	1
▲	10	74196	(000000-)	Spring Kit, Scu [Cl]	1
▲	11	74244	(000000-)	Seal Kit, Steering [Cl]	1
▲	12	74245	(000000-)	Instr, Valve, Steering, Repair	1

Fig. 13 - Metering Solution Pump Breakdown, 73260

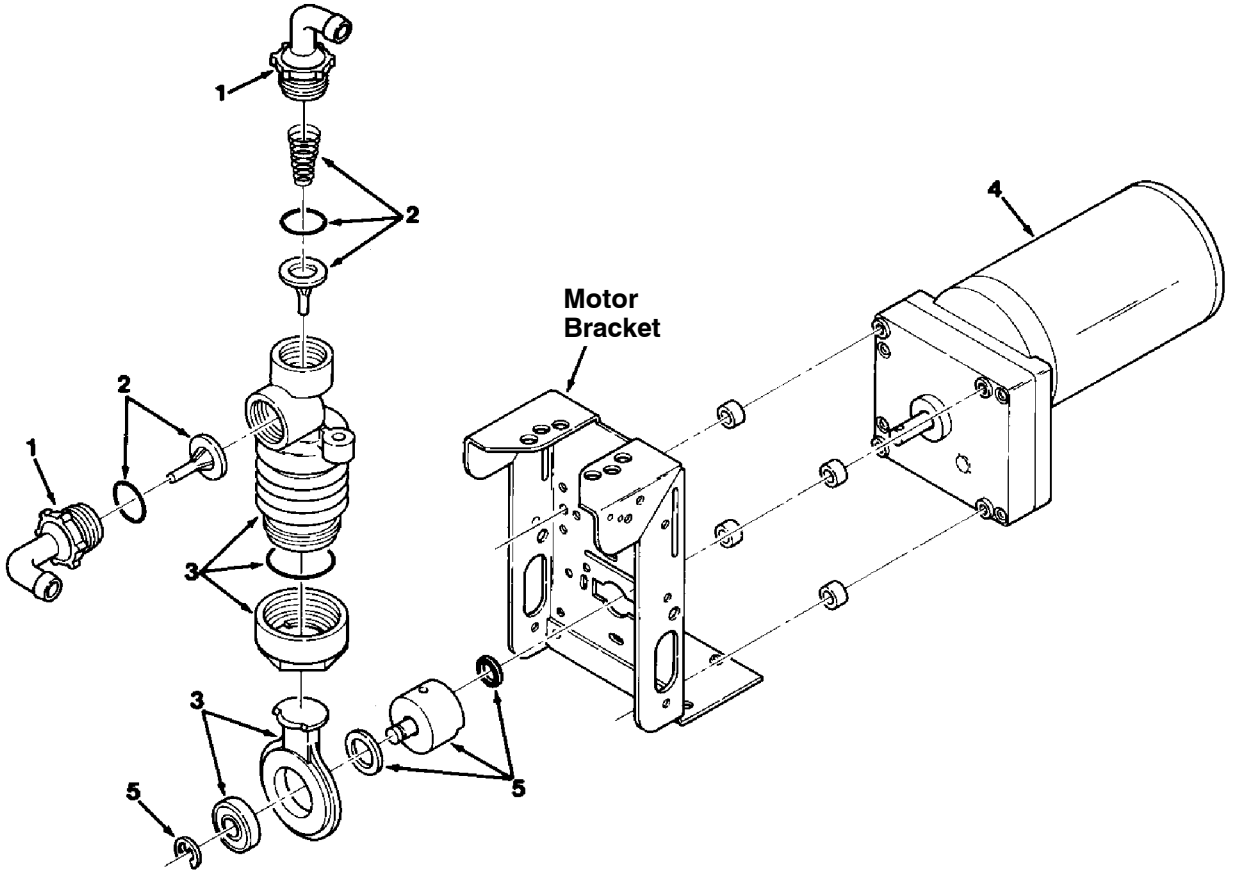

00112 - ALL

	Ref.	Part No.	Serial Number	Description	Qty.
▽		73260	(000000-)	Pump, Detgt, 14vdc, 150ml/Min 20psi	1
▲	1	63923	(000000-)	Tubing Connctr.Kit, Gorman Pmp	1
▲	2	21659	(000000-)	Valve Kit, Poppet, Gorman Rupp	1
▲	3	21657	(000000-)	Kit, Bellows, Pump, Detgt	1
▲	4	78875	(000000-)	Motor, Ele, Gear, 14vdc, Pump, Detgt	1
▲	5	02430	(000000-)	Crank Kit, Pump, F/79323, Replmt	1

Fig. 14 - Water Pump Breakdown, 1026743

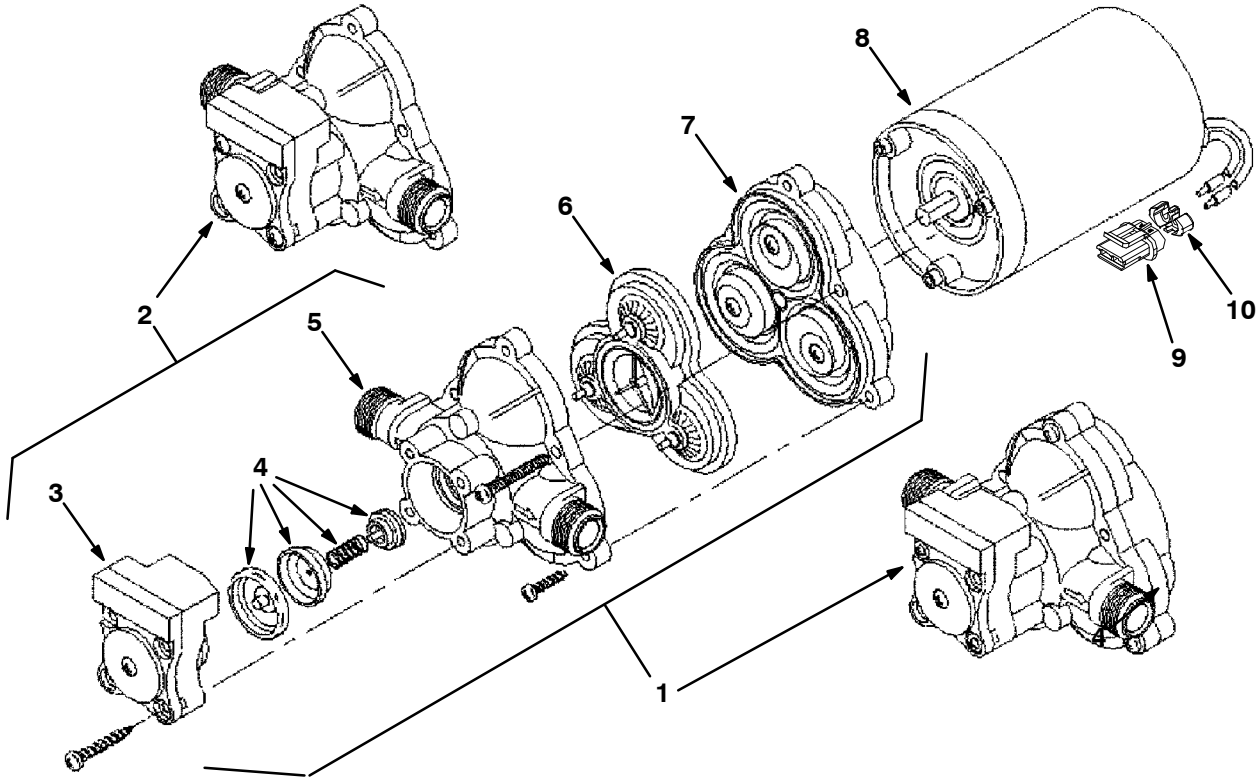

07490 - 09670

	Ref.	Part No.	Serial Number	Description	Qty.
▽		1026743	(000000-)	Pump, Diaphragm	1
▲	1	1031802	(000000-)	Complete Pump Kit, Pump, Repair,	1
▲	2	1031803	(000000-)	Hsg & Switch Kit, Pump, Repair,	1
▲	3	1031796	(000000-)	Switch Kit, Pump, Repair,	1
▲	4	1031797	(000000-)	Chech Valve Kit, Pump, Repair,	1
▲	5	1031798	(000000-)	Upper Hsg Kit, Pump, Repair,	1
▲	6	1031799	(000000-)	Bypass Valve Kit, Pump, Repair,	1
▲	7	1031800	(000000-)	Diaphragm Kit, Pump, Repair,	1
▲	8	1031801	(000000-)	Motor Kit, Pump, Repair,	1
▲	9	78950	(000000-)	Connector, Fem, 02cav, Mp280 Sealed	1
▲	10	78952	(000000-)	Lock, Secondary, 2cav, Mp280 Sealed	1
▲		78951	(000000-)	Terminal, Fem, Mp280, Sealed, 18-16ga	2
▲		10917	(000000-)	Seal, Wire, 14/16ga [Wp / Mp280 Sealed]	2

Fig. 15 - ec-H20 Module Assembly Breakdown, 9007882

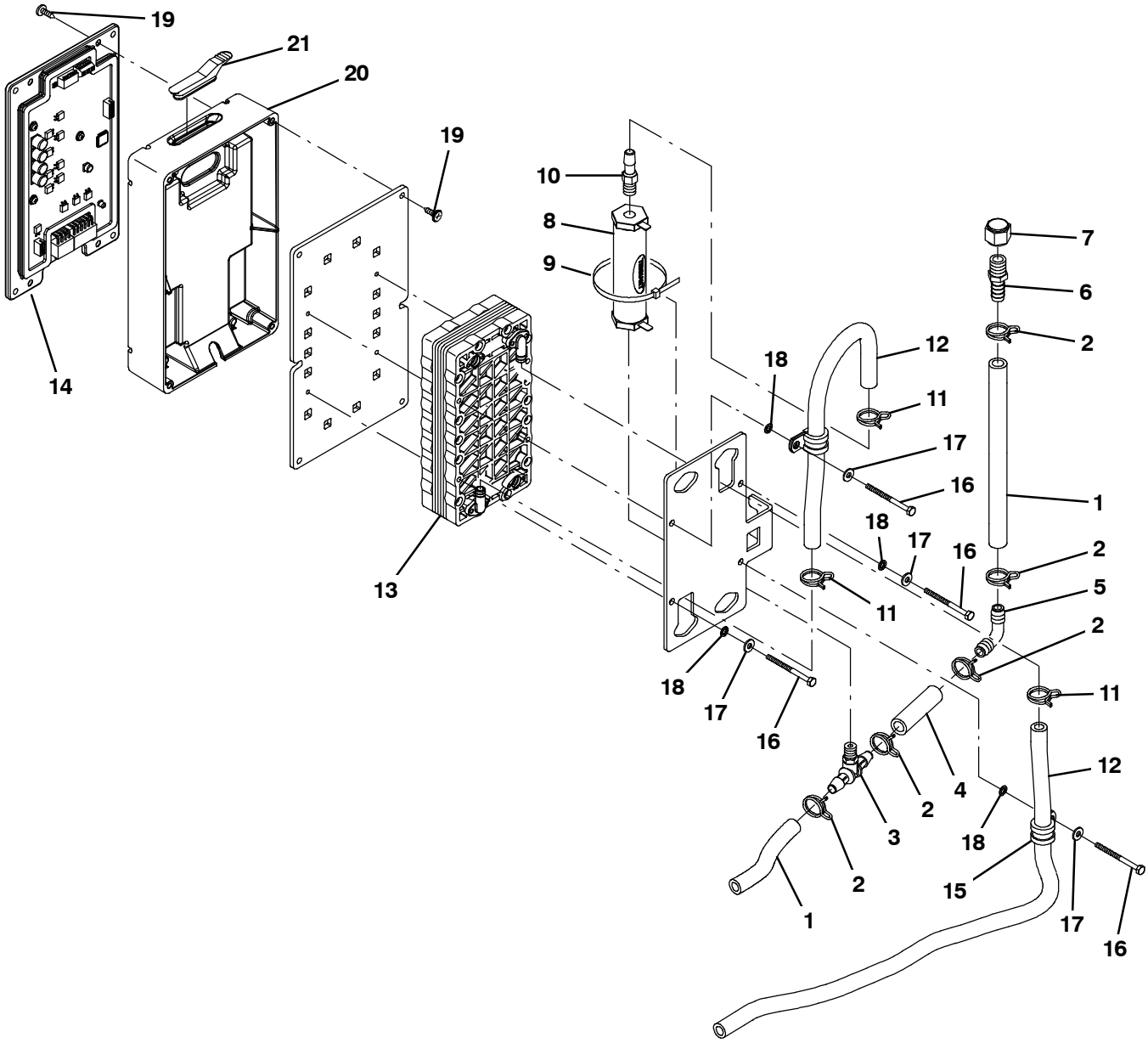

356035

Fig. 15 - ec-H20 Module Assembly Breakdown, 9007882

	Ref.	Part No.	Serial Number	Description	Qty.
▽		9007882	(000000-)	Module Kit, Replmt [Ec-H20]	1
▲	1	1014974	(000000-)	Hose, Afmkt, Pvc, Brd, 0.38id, 02ft, Clr	2
▲	2	607775	(000000-)	Clamp, Hose, Wir, .63 - .66, Blk	5
▲	3	1060517	(000000-)	Fitting, Plstc, Tee, Bm06/Pm02/Bm06	1
▲	4	1014971	(000000-)	Hose, Afmkt, Pvc, Brd, 0.38id, 01ft, Clr	1
▲	5	20951	(000000-)	Fitting, Plstc, E90, Bm06/Bm06	1
▲	6	150540	(000000-)	Fitting, Plstc, Str, Bm06/Pm04	1
▲	7	1005435	(000000-)	Fitting, Plstc, Pipe, Cap, Pf04	1
▲	8	1038159	(000000-)	Electrode, Cylindrical	1
▲	9	44961	(000000-)	Tie, Cable, Nyl, 14.5l .30w 4.0 Max D	1
▲	10	1060695	(000000-)	Fitting, Plstc, Str, Pm02/Bm05	1
▲	11	1053464	(000000-)	Clamp, Hose, Wir, .52 - .56, Yel	3
▲	12	1052336	(000000-)	Hose, Afmkt, PVC, Brd, 0.31Id, 03Ft, Clr	1
▲	13	1057637	(000000-)	Electrode, 5 Plate, High Flow	1
▲	14	9007883	(000000-)	Controller Kit, Replmt [Ec-H20]	1
▲	15	1016354	(000000-)	Clamp, Cable, Ss, 0.50d X 0.50w [Insul]	2
▲	16	32509	(000000-)	Screw, Hex, M4 X 0.70 X 50, Ss	4
▲	17	41579	(000000-)	Washer, Flat, 08, Ss	4
▲	18	02938	(000000-)	Washer, Lock, Int, 08, Ss	4
▲	19	1018155	(000000-)	Screw, Pan, Phl, M5 X 0.80 X 16, Tcut,Ss	8
▲	20	1037032	(000000-)	Housing, Bottom	1
▲	21	1054776	(000000-)	Grommet, Blind	1

Fig. 16 - FaST Injector Assembly Breakdown, 9004515

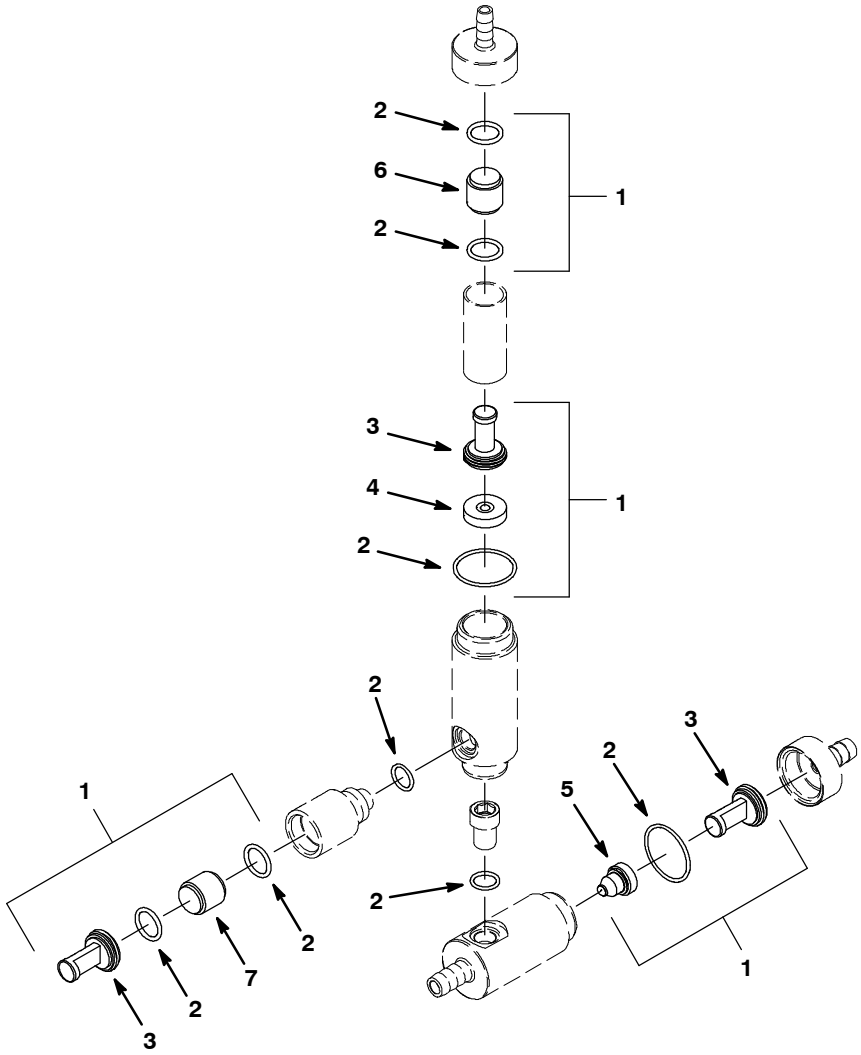

354649

	Ref.	Part No.	Serial Number	Description	Qty.
▽		9004515	(000000-)	FaST Kit, Injector, CI[M20/M30 FaST II+]	1
▲▽	1	9004514	(000000-)	FaST Kit, Ci, Injector Rebuild[FaST II+]	1
▲▲	2	9003008	(000000-)	Fast Kit, Ci, Injector Seals [Fast Ii+]	1
▲▲	3	9003009	(000000-)	Fast Kit, Ci, Injector Filters[Fast Ii+]	1
▲▲	4	1042711	(000000-)	Plate Assy, Orifice, 0.0105id, Green	1
▲▲	5	1042710	(000000-)	Plug, Orifice, 0.060, Ss [Fast Ii+]	1
▲▲	6	1030444	(000000-)	Valve, Check, 0002psi [Fast Ii+]	1
▲▲	7	1030441	(000000-)	Valve, Check, 0005psi [Fast Ii+]	1

SECTION 5

Contents **Page**

Fig. 1 – Cylinder Head and Valves Group . . . 5-2
Fig. 2 – Crankshaft and Pistion Group 5-4
Fig. 3 – Oil and Water Pump Group 5-6
Fig. 4 – Oil Pan and Filter Group 5-8
Fig. 5 – Manifold Group 5-9
Fig. 6 – Camshaft Group 5-10
Fig. 7 – Ignition Group 5-12

Fig. 1 - Cylinder Head and Valves Group

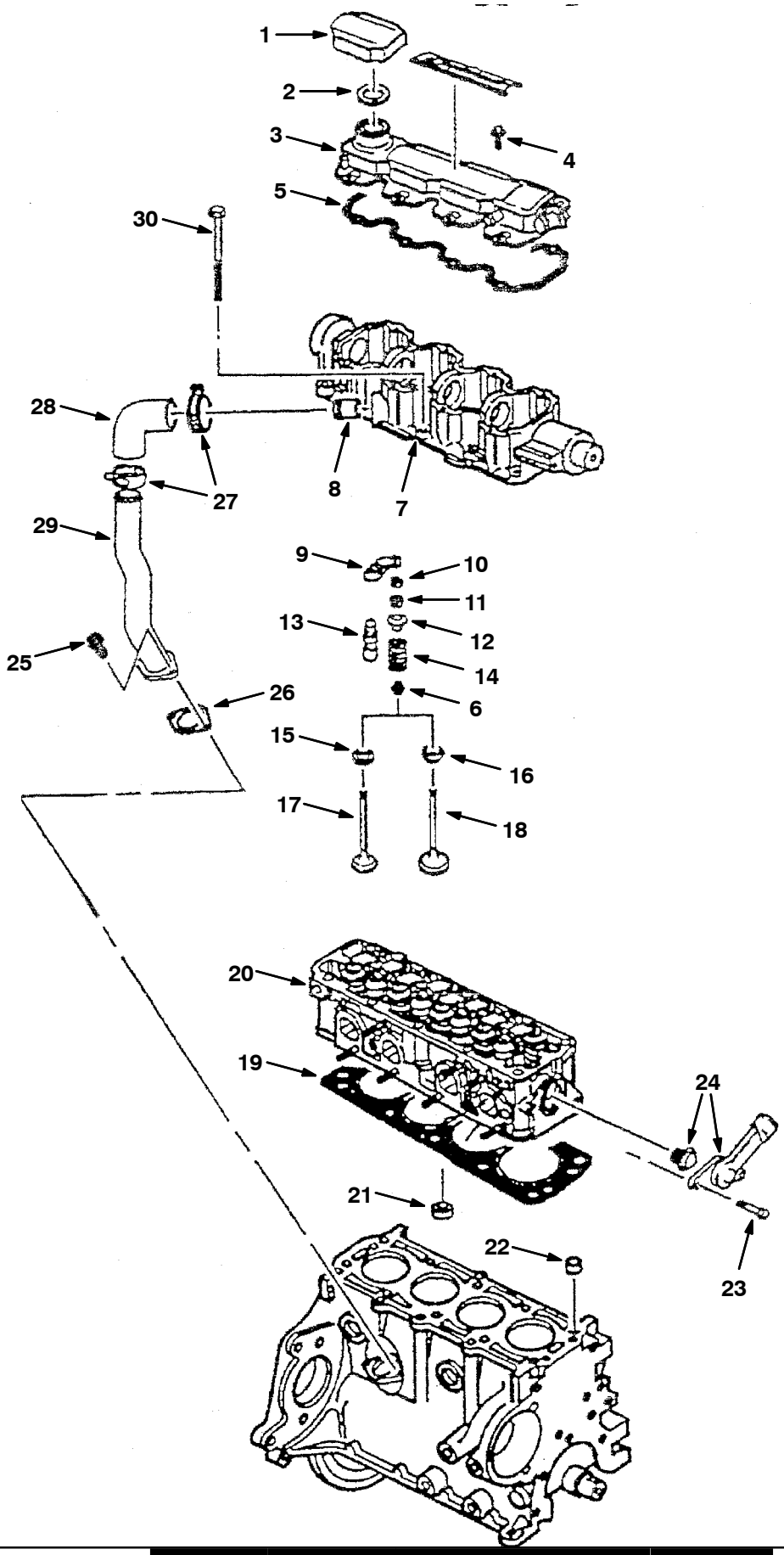

G, LP

Fig. 1 - Cylinder Head and Valves Group

Ref.	Part No.	Description	Qty.
1	372574	Cap, Filler, Oil, W/ Org	1
2	372573	Seal, Org, Cap	1
3	372007	Cover, Hsng, Camshaft	1
4	371990	Bolt, Camshaft Cover	8
5	372008	Gasket, Cover, Hsng, Camshaft	1
6	9003345	Seal, Seat, Valve	8
7	372018	Housing, Camshaft	1
8	372019	Tube [Pcv]	1
9	372030	Arm, Rocker, Valve	8
10	372031	Seat, Spring, Valve, 0.333	8
11	372033	Key, Valve Stem	16
12	372034	Cap, Spring, Valve	4
13	372035	Screw, Adj, Valve, Hyd	8
14	372036	Spring, Valve	8
15	372037	Seat, Rotator, Valve	4
16	372032	Seat, Spring, Valve	4
17	372038	Valve, Exhaust	4
18	372039	Valve, Intake	1
19	372022	Gasket, Head, Cyl	1
20	372023	Head, Cyl	1
21	372024	Seat, Valve, Exhaust, [+0.2mm]	4
21	372025	Seat, Valve, Exhaust, Std	4
21	372026	Seat, Valve, Exhaust, [+0.4mm]	4
21	372027	Seat, Valve, Intake, Std	4
21	372028	Seat, Valve, Intake, [+0.2mm]	4
21	372029	Seat, Valve, Intake, [+0.4mm]	4
22	371999	Pin, Lock, Cyl Head, 14mm X 17mm	2
23	372048	Bolt, Hsng, Thermostat	2
24	372047	Thermostat, W/ Hsng And Seal	1
25	371957	Bolt, Tube [Pvc], M6 X 1 X 15	2
26	371958	Gasket, Tube [Pcv]	1
27	371954	Clamp, Hose, 1.75 [Pcv]	2
28	371955	Hose [Pcv]	1
29	371956	Tube [Pcv]	1
30	372882	Bolt, Head. Cyl	10

Fig. 2 - Crankshaft and Pistion Group

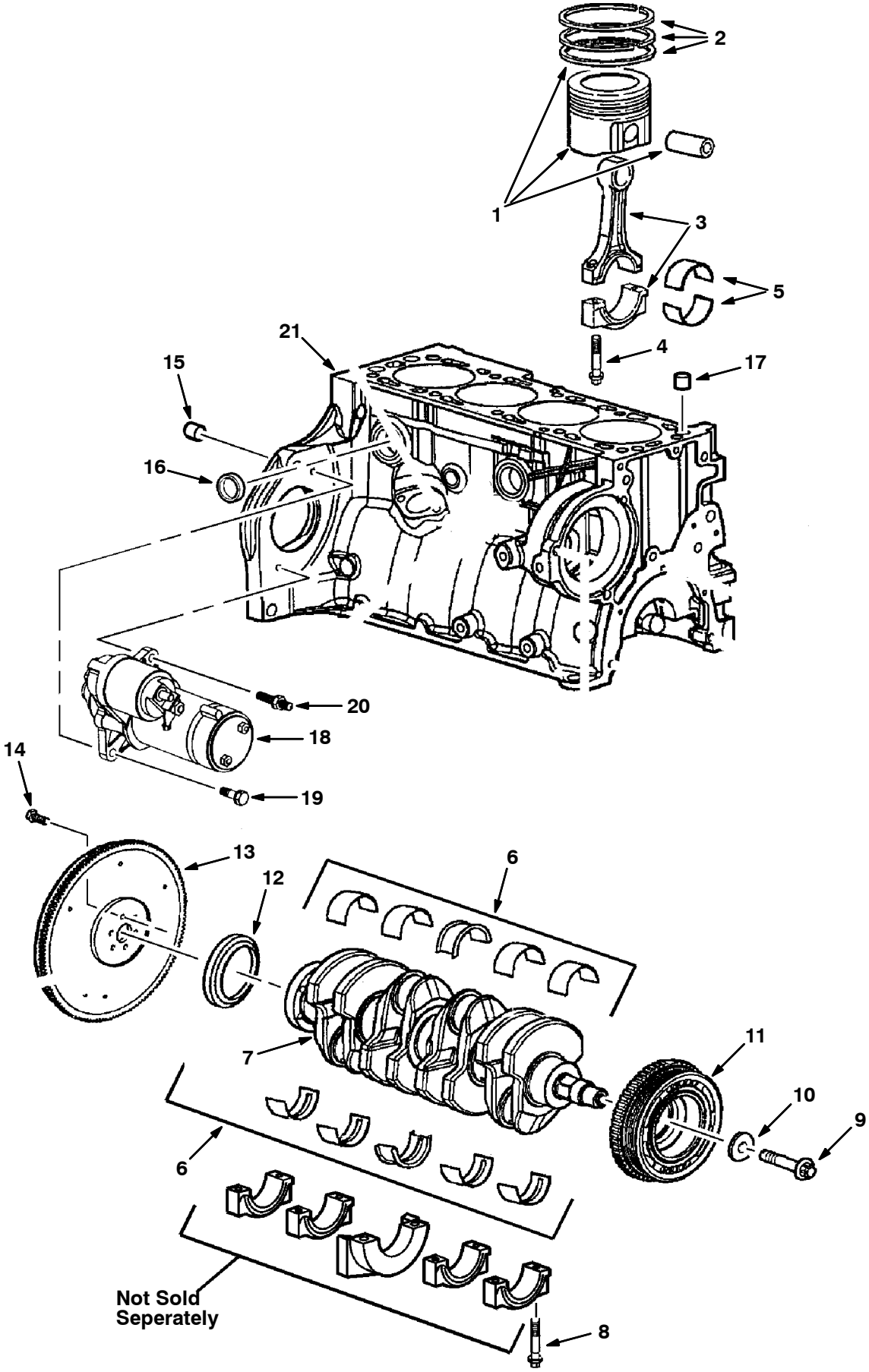

G, LP

Fig. 2 - Crankshaft and Piston Group

	Ref.	Part No.		Description	Qty.
▽	1	371932		Piston, W/ Pin, Std	1
▲	2	371931		Ring Kit, Piston, Std 78.95-79.02mm	4
	3	371934		Rod, Connecting, M08 X 45	4
	4	371935		Bolt, Connecting Rod	8
	5	371933		Bearing Kit, Rod, Connecting, Std	1
	6	371966		Bearing Kit, Cshft, 1.995-2.001mm (Brown Blue)	4
	6	371967		Bearing Kit, Cshft, 2.120-2.126mm	4
	6	371968		Bearing Kit, Cshft, 2.114-2.120mm	4
	6	371969		Bearing Kit, Cshft, 1.989-1.995mm (Brown)	4
	6	371970		Bearing Kit, Cshft, 1.989-1.995mm (Green Blue)	4
	6	371971		Bearing Kit, Cshft, 1.995-2.001mm (Green)	4
	7	371965		Crankshaft	1
	8	371946		Bolt, M10 X 1.50 X 75mm	10
	9	371938	1	Bolt, M12 X 1.75 X 62mm	1
	9	384961	2	Bolt, Pulley, Cshft	1
	10	371937		Washer, Sheave, Cshft	1
	11	371936		Sheave, Cshft	1
	12	371945		Seal, Oil, Cshft	1
	13	371979		Flywheel	1
	14	371976		Bolt, Flywheel	6
	15	371978		Pin, Lock, Transmission	2
	16	371942		Plug, Hole, Coolant, Eng Block	6
	17	371999		Pin, Lock, Cyl Head, 14mm X 17mm	2
	18	371962	3	Starter, 12vdc [Gm] (Before Mar. 2006)	1
	18	384963	4	Starter, 12vdc [Delco] (Mar. 2006 and Newer)	1
	19	371963	1	Bolt, M08 X 1.25 X 25mm	1
	19	384964	2	Bolt, M08 X 1.25 X 25mm	1
	20	371964		Stud, Starter, M08 X 1.25	1
	21	371944		Block, Short, Eng, W/ Piston & Ring	1

1 Serial Number (000000-xxxxxx)

2 Serial Number (xxxxxx-)

3 Serial Number (000000000-1PGL13150)

4 Serial Number (1PGL13151-)

Fig. 3 - Oil and Water Pump Group

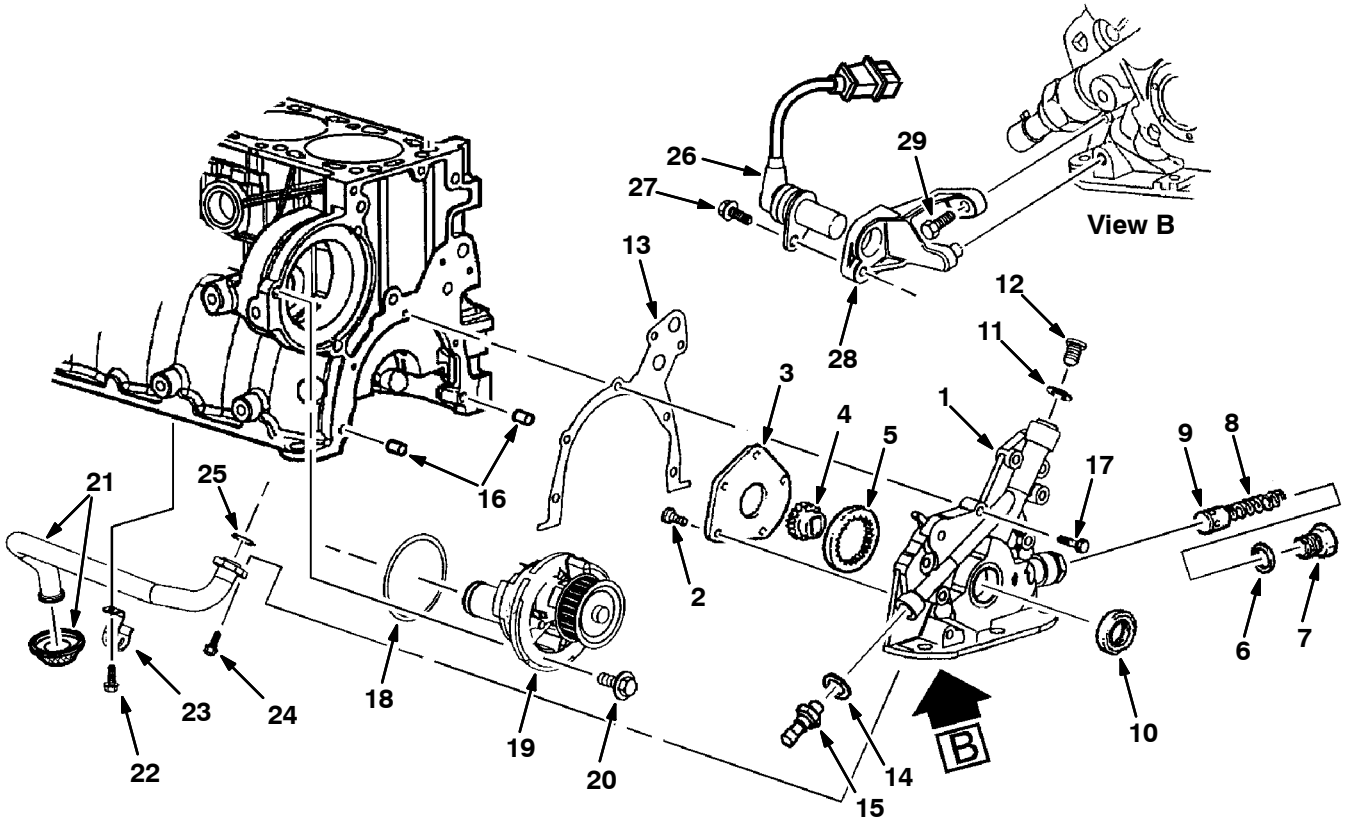

G, LP

Fig. 3 - Oil and Water Pump Group

	Ref.	Part No.		Description	Qty.
▽	1	372572		Pump, Oil	1
▲	2	371947		Bolt, Cover, Oil Pump, M6 X 14	5
▲	3	371948		Cover, Pump, Oil	1
▲	4	371949		Gear, Ring, Drive, Oil Pump	1
▲	5	371950		Gear, Drive, Oil Pump	1
▲	6	371998		Gasket, Plug, Relief Valve,Oil Press	1
▲	7	371994		Plug, Bore, Valve, Relief, Oil Press	1
▲	8	371993		Spring, Valve, Relief, Oil Press	1
	9	371997		Valve, Relief, Oil Press	1
	10	372005		Seal, Org, Oil Pump	1
	11	371951		Seal, Org, Hsng, Oil Pump	1
	12	371952		Plug, Hsng, Oil Pump	1
	13	371984		Gasket, Pump, Oil	1
	14	371987		Seal, Org, Press Switch / Drain Plug	1
	15	371996	3	Switch, Indicator, Oil Press	1
	15	9008197	4	Switch, Indicator, Oil Press [2010]	1
	16	371983		Pin, Ring, Lock, Hsng, Water Pump	2
	17	371986		Bolt, Pump, Oil	6
	18	372567		Seal, Org, Water Pump	1
	19	371981		Pump, Water [Gm]	1
	20	371980		Bolt, Cover, Water Pump	3
	21	372001		Screen, Oil Pump, W/ Suc Pipe	1
	22	371991		Bolt, Bracket,Screen,Oil Pump,M6x1x1	1
	23	372000	1	Bracket, Screen, Oil Pump	1
	23	384966	2	Bracket, Screen, Oil Pump	1
	24	371990		Bolt, Oil Pump Screen/Camshaft Cover	2
	25	371988		Seal, Ring, Pipe, Suc, Oil Pump	1
	26	372002		Sensor, Position, Cshft	1
	27	384968		Bolt, Bracket, Sensor,Cshft Position	1
	28	372003		Bracket, Sensor, Position, Cshft	1
	29	372004		Bolt, Sensor, Position, Cshft	3

1 Serial Number (000000-xxxxxx)

2 Serial Number (xxxxxx-)

3 Tennant Serial number (000000-003122)

4 Tennant Serial number (003123-)

Fig. 4 - Oil Pan and Filter Group

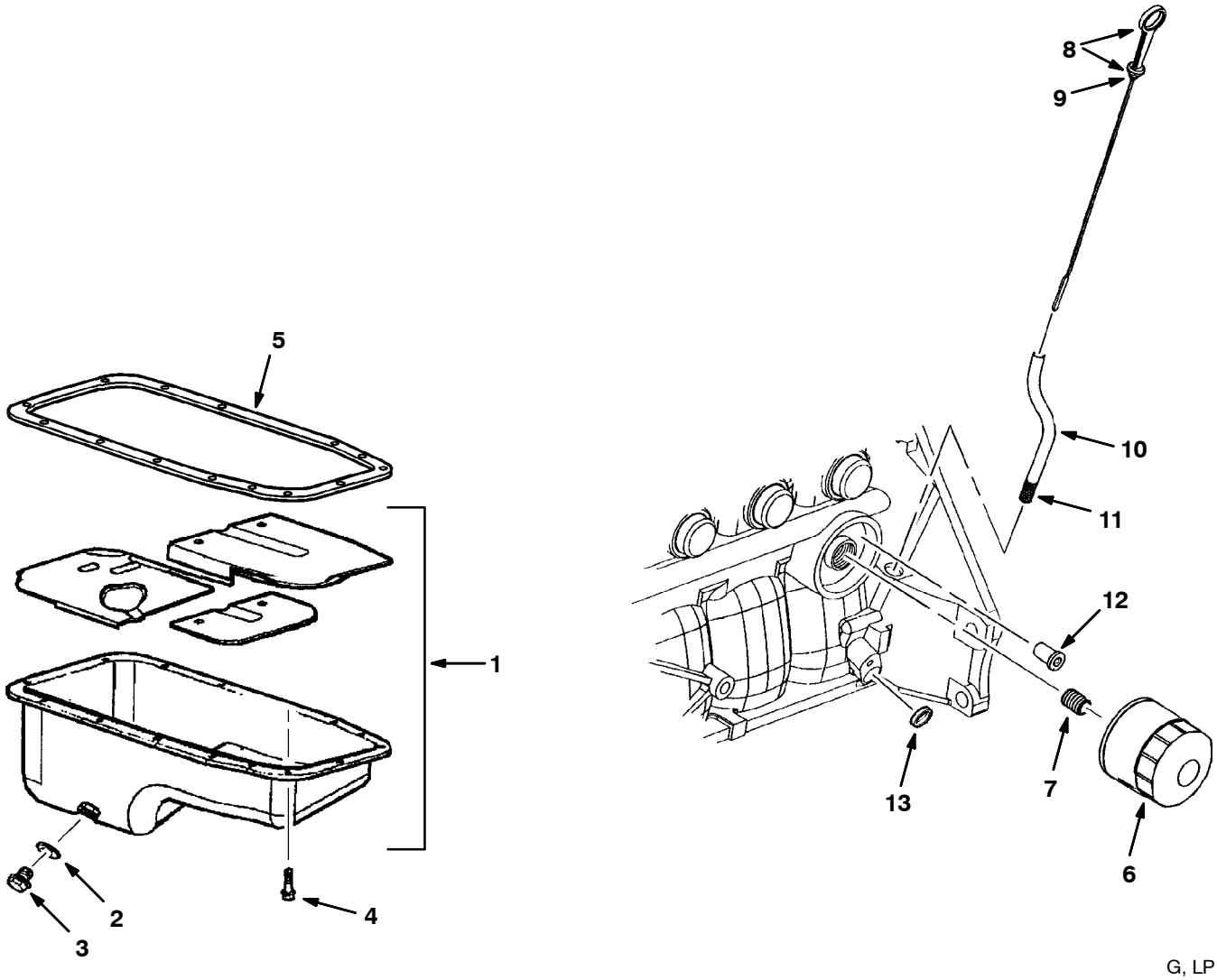

G, LP

	Ref.	Part No.		Description	Qty.
▽	1	371960		Pan, Oil, W/ Baffle / Plug / Seal	1
▲	2	371987		Seal, Org, Press Switch / Drain Plug	1
▲	3	371992		Plug, Drain, Oil Pan, M14 X 1.5 X 12	1
	4	371961	1	Bolt, M06 X 1.00 X 13mm	15
	4	384962	2	Bolt, Pan, Oil	15
	5	371959		Gasket, Pan, Oil	1
	6	371972		Element, Fltr, Oil, Eng, Spin-On	4
	7	371973		Fitting, Fltr, Oil	1
▽	8	372560		Dipstick, Oil	1
▲	9	371995		Seal, Org, Cap, Fltr, Oil	1
	10	371940		Tube, Ds	1
	11	371941		Sealant, Tube, Ds	1
	12	371975		Valve, By-Pass, Oil Fltr	1
	13	371943		Plug, Hole, Core, Eng Block	1

1 Serial Number (000000-xxxxxx)

2 Serial Number (xxxxxx-)

Fig. 5 - Manifold Group

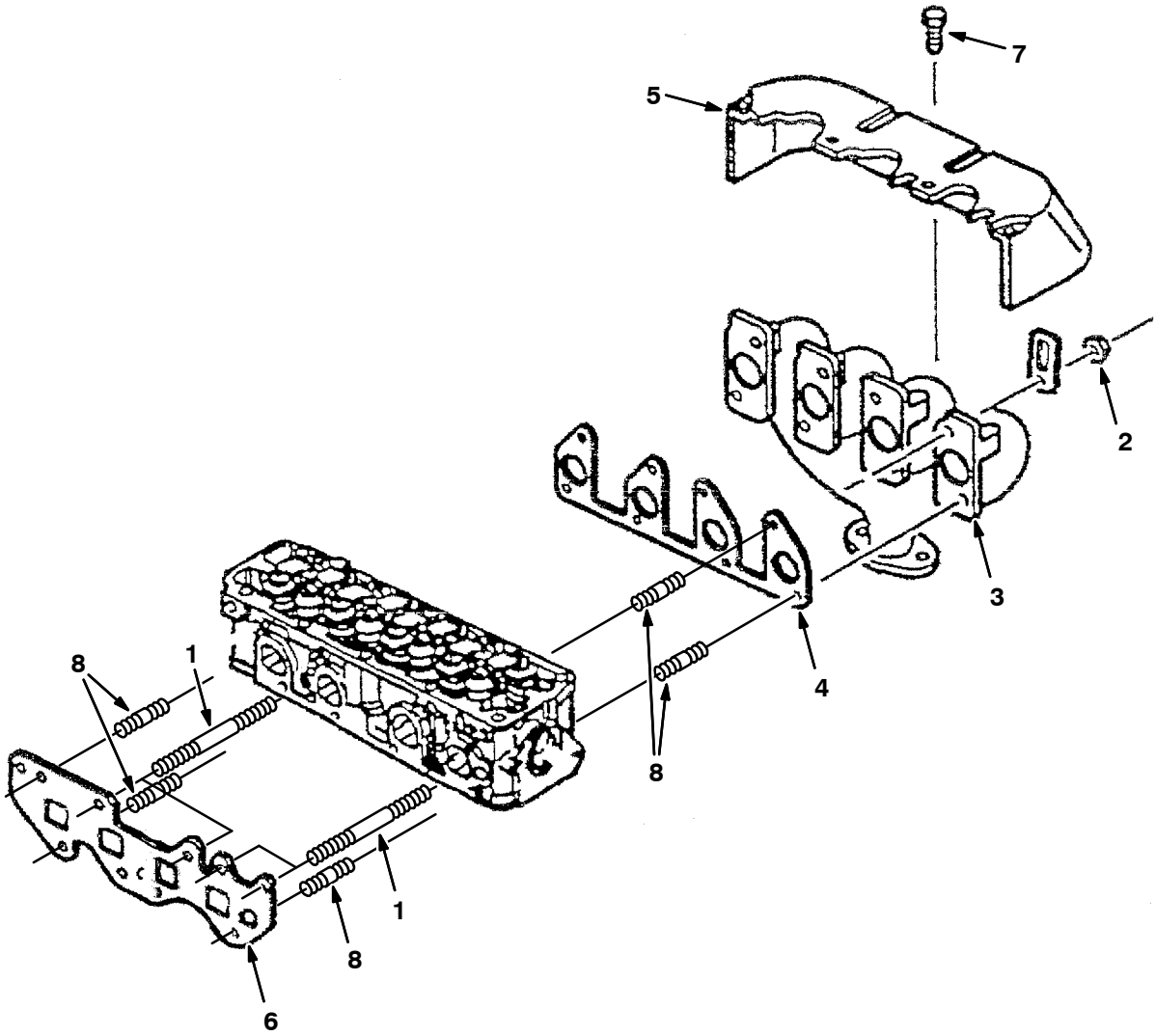

G, LP

Ref.	Part No.	Description	Qty.
1	372021	Stud, Manifold, M8 X 96	4
2	372049	Nut, Manifold, Exhaust, M8 X 1.25	8
3	372050	Manifold, Exhaust	1
4	372051	Gasket, Manifold, Exhaust	1
5	372052	Shield, Manifold, Exhaust	1
6	372053	Gasket, Manifold, Intake	1
7	372066	Bolt, Shield, Manifold, Exhaust	5
8	372020	Stud, Manifold, M8 X 28	13

Fig. 6 - Camshaft Group

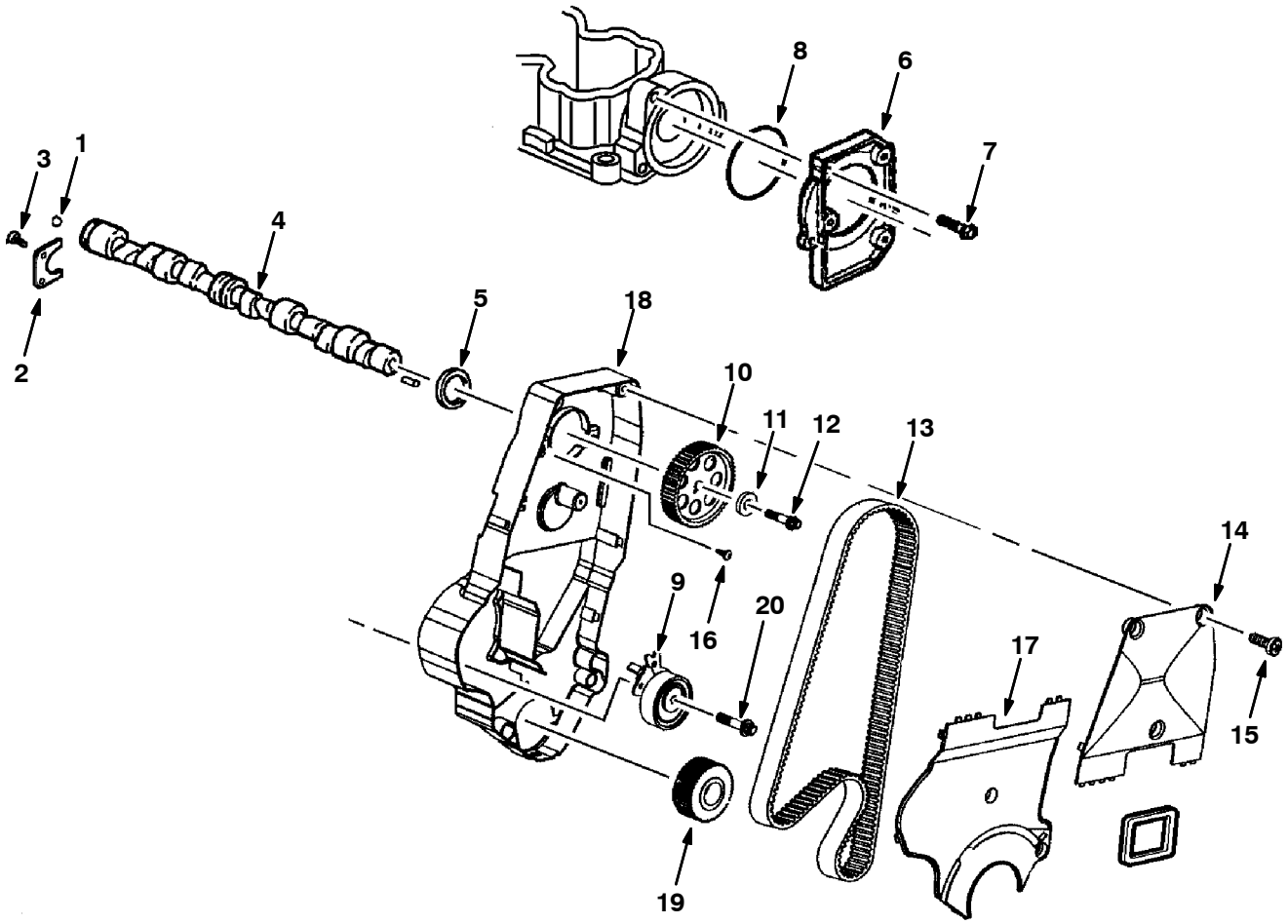

G, LP

Fig. 6 - Camshaft Group

Ref.	Part No.	Description	Qty.
1	372009	Ball, Camshaft	1
2	372010	Retainer, Camshaft	1
3	372011	Bolt, Retainer, Camshaft, M6 X 1 X 16	2
4	372012	Camshaft	1
5	372013	Seal, Org, Bolt, Cover, Camshaft Hsng	1
6	372014	Cover, Hsng, Camshaft	1
7	372015	Bolt, Cover, Camshaft, M6 X 1 X 22	3
8	372016	Seal, Org, Bolt, Cover, Camshaft Hsng	1
9	9004674	Pulley, Tension, Belt, Timing	1
10	372040	Sprocket, Camshaft	1
11	372017	Washer, Sprkt, Camshaft	1
12	372041	Bolt, Sprocket, Camshaft, M10x1.25x60	1
13	1057029	Belt, Timing [Gm1.6l]	1
14	372043	Cover, Belt, Timing, Front	1
15	371961	Bolt, Eng Cover, M6 X 1 X 13	6
16	372046	Bolt, Tensioner, Timing Belt,M8x1.25x48	1
17	372044	Cover, Belt, Timing, Upper Front	1
18	372616	Housing, Camshaft	1
19	388552	Sprocket, Crankshaft	1
20	9004675	Bolt, Tensioner [GM]	1

Fig. 7 - Ignition Group

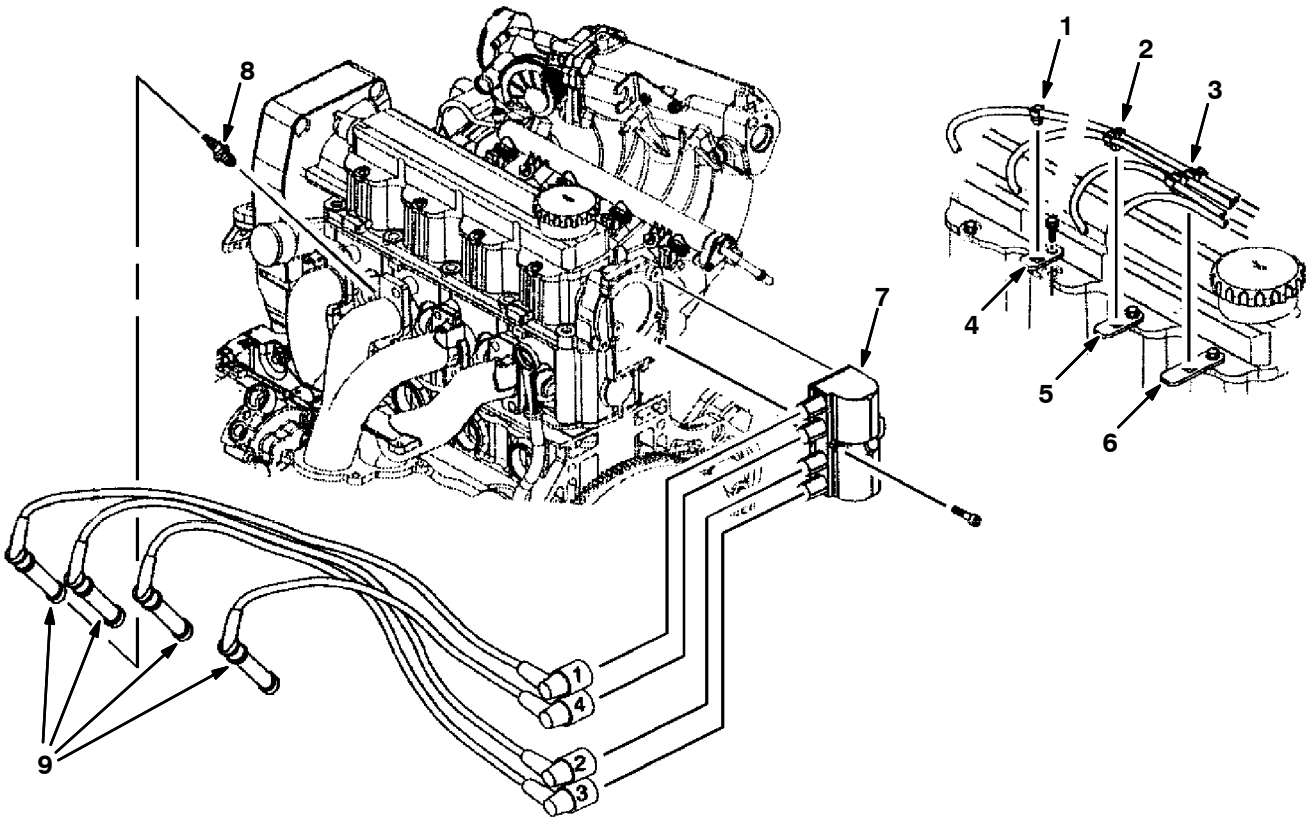

G, LP

Ref.	Part No.	Description	Qty.
1	372054	Retainer, Sparkplug, 1 Way	1
2	372055	Retainer, Sparkplug, 2 Way	1
3	372056	Retainer, Sparkplug, 3 Way	1
4	372057	Bracket, Retaining, Wire, Sparkplug	1
5	372058	Bracket, Retaining, Wire, Sparkplug	1
6	372059	Bracket, Retaining, Wire, Sparkplug	1
7	372060	Coil, Ignition	1
8	372575	Sparkplug	4
9	372603	Wire Set, Sparkplug [1.6l]	1

SECTION 6

CONTENTS **PAGE**

PART NUMBER TO PAGE NUMBER CROSS REFERENCE LIST 6-2
PART DESCRIPTION TO PAGE NUMBER CROSS REFERENCE LIST 6-14

PART NUMBER TO PAGE NUMBER CROSS REFERENCE LIST

Part Number	Page Number
IB3614	4-10
00500-15	4-8, 4-9
00927	2-91, 2-93
00954	2-125
00960	2-55
00966	4-10
01316	3-3, 3-61
01493	2-9
01681	2-17
01683	2-25, 2-31, 2-77, 3-3, 3-19, 3-25, 3-29, 3-33, 3-37, 3-43, 3-61, 3-65
01684	2-5, 2-83, 2-87, 2-89, 2-97, 2-114, 2-119, 2-121, 3-29, 3-37, 3-63
01685	2-57, 2-59, 2-61, 2-67, 2-83, 2-87, 2-89, 2-97, 2-99, 2-101, 2-103, 2-107, 2-111, 2-117, 2-123, 3-3, 3-7, 3-11
01686	2-7, 2-79, 2-99, 3-13
01714	2-75, 2-77
01754	2-83
01760	2-15
01762	2-91, 2-93, 3-7, 3-9
02430	4-22
02706	4-7
02850	2-15, 2-21, 2-62, 3-21
02931	2-103
02938	2-85, 4-25
02942	2-79
03192	3-55
03495	2-101
04414	2-9, 2-23, 2-99, 2-101
04706	2-17
04733-12	2-95
06532	2-25, 2-27, 2-29, 2-35
06548	2-75
06549	2-15, 2-25, 2-31, 2-69, 3-37, 3-61
06922	2-83
06927	2-21, 2-61
06928	2-85
06929	2-15
06938	2-25, 2-31
06939	3-61
06942	2-9, 2-19, 2-25, 2-27, 2-29, 2-31, 2-35, 2-37, 2-61, 2-69, 2-75
06943	2-15, 2-23, 2-47, 2-51, 2-61
06944	2-85
06946	2-27, 2-29, 2-35
06949	2-43
06955	2-75, 2-117, 2-123
06956	2-41, 2-43
06957	2-83, 2-99
06960	2-17
06961	2-55, 2-59
06962	2-65, 3-65
06963	2-83
06965	3-65
06969	2-73, 2-95
06972	2-23
06988	2-19
07255	2-25, 2-27, 2-29
07259	2-79, 2-87, 2-89, 2-95, 2-103
07449	2-103
07514	3-19
07782	2-19
07786	2-77, 2-107, 2-111
07788	2-107, 2-111
07789	2-79
07790	2-65
07791	2-37, 2-39, 2-105, 2-109, 2-145
07805	2-97, 3-37
07810	2-87, 2-127
08085	2-15
08165	2-65
08166	2-57, 2-59
08170	2-75
08171	2-73, 2-85
08175	2-91, 2-93
08179	2-75, 2-79, 2-87, 2-89, 2-99, 3-7, 3-11
08180	2-71
08182	2-77, 2-107, 2-111
08236	2-95
08708	2-9, 2-15, 2-17, 2-19, 2-25, 2-31, 2-47, 2-49, 2-51, 2-53, 2-61, 2-65, 2-69, 2-75
08709	2-7, 2-9, 2-21, 2-41, 2-43, 2-45, 2-47, 2-49, 2-51, 2-53, 2-55, 2-61, 2-67, 2-69, 2-75, 2-77, 2-107, 2-111, 2-127, 2-149, 3-15
08711	2-23, 2-73
08712	2-13, 2-57, 2-83, 2-87, 2-89, 2-97, 2-99, 2-119, 2-121, 3-63
08713	2-57, 2-59, 2-61, 2-67, 2-77, 2-81, 2-83, 2-87, 2-89, 2-91, 2-93, 2-97, 2-99, 2-101, 2-103, 2-105, 2-107, 2-109, 2-111, 2-113, 2-117, 2-123, 3-7, 3-13, 3-15
08714	2-81, 2-89, 2-99, 2-103
08716	2-57, 2-59, 2-87, 2-89, 2-107, 2-111, 2-119, 2-121
08875	2-113, 2-114
09005	2-91, 2-93
09007	2-107, 2-111, 2-121
09010	2-67, 2-77, 2-81, 2-87, 2-89, 2-97, 2-99, 2-113, 3-7, 3-11, 3-15
09023	2-99
09028	2-79, 2-85, 2-95, 2-107, 2-111
09037	2-35
09081	2-105, 2-109
09145	2-55
09198	2-77
09200	2-15, 2-21, 2-45, 2-83, 2-119, 3-19, 3-25, 3-29, 3-33, 3-43, 3-63
09206	3-21, 3-37
09252	2-15, 2-77, 2-79, 3-37
09291	2-83, 2-87, 2-89
09738	3-13, 3-37
09739	2-91, 2-93, 2-119, 3-13, 3-19, 3-25, 3-33, 3-43, 3-47, 3-49, 3-51, 3-52, 3-53, 3-63
09740	2-9, 2-15, 2-21, 2-61, 2-67, 2-83, 2-95, 2-97, 2-107, 2-111, 2-113, 2-117, 2-121, 2-123, 2-125, 2-149, 2-151, 3-3, 3-5, 3-21, 3-29, 3-37, 3-47, 3-49, 3-51, 3-61
09741	2-95, 2-99
09744	2-114, 3-37, 3-63
09832	2-61, 2-65
1002789	3-23, 3-25
1002898	3-21, 3-29
1002899	3-21, 3-29
1005086	3-23, 3-25
1005219	3-39
1005255	3-21
1005302	3-19, 3-29, 3-39
1005435	3-21, 3-29, 4-25
1005506	3-19
1005507	3-19
1005508	3-19
1005552	3-19, 3-23, 3-25, 3-29, 3-39
1006400	3-29
1006401	3-19
1006415	3-21, 3-39
1006416	3-29
1006447	3-19
1007220	2-99
1007482	2-61, 2-67
1008640	2-55
1008916	2-19
1010614	3-43

Part Number	Page Number
1010668	3-25, 3-29, 3-33, 3-43
1010684	3-19
1010836	3-19
1011018	2-199
1011019	2-199
1011020	2-199
1011107	2-41, 2-43
1011216	2-57, 2-59
1011353	2-23
1011403	3-29, 3-39
1011412	3-19, 3-25, 3-31, 3-33, 3-43
1011521	3-23, 3-39
1011780	2-47, 2-49, 2-51, 2-53
1011799	2-61
1011837	3-41
1011885	3-5
1011895	2-41, 2-43
1011899	2-47, 2-49, 2-51, 2-53
1012160	2-41
1012248	2-43
1013031	2-57, 2-59
1013086	2-41, 2-43
1013117	2-59
10137	1-1, 2-69
1013902	3-21
1014082	3-21
1014563	2-55, 2-61, 2-65, 2-83, 2-87, 2-89, 2-103, 2-125, 2-127, 3-55
1014575	3-21
1014705	2-95
1014747	2-67
1014929	3-29
1014971	4-25
1014974	3-5, 3-43, 4-25
1014986	3-29
1015033	3-5
1015041	2-61, 2-67
1015045	2-119, 3-3, 3-13, 3-31, 3-41, 3-61
1015047	3-5
1015067	3-25, 3-33
1015220	2-83
1015547	2-25, 2-27, 2-29, 2-39
1015897	2-29
1015930	2-25, 2-27, 2-32, 2-37
1016354	4-25
1016463	2-87
1016560	2-29
1016561	2-39
1016624	2-57
1016837	3-3
1017101	2-114
1017141	2-201
1017218	2-9, 2-15, 2-21, 2-81, 2-87, 2-89, 2-113, 2-117, 2-121, 2-123, 2-125, 2-149, 2-151, 3-5, 3-21, 3-29, 3-37, 3-47, 3-49, 3-51, 3-61
1017248	3-49, 3-52
1017250	3-51, 3-53
1017368	2-5
1017386	3-39
1017413	3-39
1017415	3-39
1017791	2-7
1017868	1-1, 2-101
1017903	2-71
1017944	2-83
1017947	2-45
1017969	2-57
1017978	2-47
1017987	2-51
1018059	2-62
1018097	3-21
1018098	3-19, 3-29
1018142	2-57, 2-59
1018155	4-25
1018193	2-87
1018194	2-87
1018196	2-87
1018197	2-87
1018199	2-87
1018202	2-87
1018203	2-83
1018207	2-83
1018208	2-85
1018209	2-127
1018210	2-87
1018216	2-127
1018226	2-79
1018227	2-79
1018235	2-81
1018236	2-87, 2-89
1018237	2-87, 2-89
1018239	2-81
1018240	2-85
1018241	2-79
1018244	2-87
1018245	2-87, 2-89
1018252	2-127
1018253	2-87, 2-89
1018258	2-81
1018260	2-79
1018262	2-79
1018266	2-79
1018272	2-81
1018274	2-85
1018275	2-79
1018276	2-79
1018280	2-85
1018293	2-85
1018300	2-81
1018333	3-25
1018463	2-61
1018495	3-61
1018499	3-19, 3-61
1018549	2-199
1018776	2-15
1018780	3-21
1018883	3-19
1018884	3-19
1018936	2-149, 4-11
1018938	3-15, 4-13
1018939	2-25, 2-31
1019031	2-107
1019146	2-95
1019225	2-7
1019228	2-15
1019250	3-61
1019251	2-7
1019265	2-61, 2-67
1019273	2-61
1019295	1-1, 2-105, 2-109
1019394	2-41
1019416	2-41
1019424	2-117, 2-123
1019445	3-47, 3-49, 3-51
1019630	2-199
1019636	3-5
1019646	3-27
1019647	3-52, 3-53
1019939	2-41
1019940	2-41
1019950	2-199
1019968	2-61, 2-65
1019971	3-47, 3-49, 3-51
1020002	2-95
1020003	2-95
1020065	2-121
1020163	2-97
1020166	1-1, 2-97
1020168	2-9, 3-37
1020186	2-21
1020207	2-97
1020208	2-97
1020209	2-113
1020263	2-121
1020320	2-125
1020331	2-121
1020335	2-121
1020394	2-149, 4-17
1020428	2-114
1020434	2-201
1020487	2-15
1020526	3-63
1020540	2-9
1020548	2-107
1020602	2-57
1020708	2-149
1020828	2-97
1020904	2-9
1020949	2-47, 2-49, 2-51, 2-53

Part Number	Page Number
1021019	2-91, 2-93
1021047	2-85
1021090	2-121
1021210	3-5, 4-3
1021265	2-17
1021290	2-69
1021325	3-3
1021327	2-7
1021404	2-103
1021419	2-121
1021439	3-11
1021473	3-11
1021497	2-103
1021511	2-101
1021514	2-47, 2-51
1021546	2-103
1021564	3-11
1021579	1-1, 2-147
1021609	2-99
1021617	3-11
1021789	2-57
1021794	3-7
1021834	2-9
1021878	3-21, 3-29
1021879	2-121
1021881	3-61
1021920	2-121
1021941	2-87, 2-89
1021991	2-149
1022003	2-97
1022004	2-21
1022005	2-15, 2-21
1022007	1-1, 2-97
1022009	1-1, 2-97
1022031	2-75
1022069	2-19
1022088	2-119
1022105	2-15
1022106	3-13
1022111	3-7
1022113	2-57
1022135	3-7
1022137	2-117, 2-123
1022140	2-77
1022165	2-97
1022167	2-121
1022176	2-113
1022179	2-97
1022182	2-114
1022188	3-7
1022229	3-5
1022243	2-75
1022260	3-7
1022265	3-55
1022266	3-55
1022276	3-55
1022302	3-7
1022318	3-13
1022345	2-77
1022359	2-97
1022363	2-97
1022364	2-25, 2-27
1022370	2-121
1022372	2-99
1022377	2-125
1022442	2-99
1022482	2-149
1022484	2-149
1022545	2-103
1022699	2-9
1022736	2-75
1022779	2-77
1022787	2-77
1022794	2-57
1022798	2-77
1022825	2-107, 2-111
1022831	2-101
1022846	2-105, 2-109
1022978	2-111
1023239	2-101
1023288	2-23
1023306	2-107
1023307	2-111
1023314	2-111
1023464	2-11
1023476	2-103
1023482	2-41, 2-43
1023485	3-17
1023486	3-17
1023487	2-137
1023488	2-135
1023489	2-135
1023499	2-15
1023502	2-117, 2-123
1023545	2-147
1023569	2-11
1023606	2-137
1023607	2-137
1023608	2-135
1023609	2-135
1023611	2-137
1023617	2-91
1023754	2-125
1023769	2-139
1023779	2-99
1023853	2-61, 2-67
1023879	3-55
1023926	2-17
1024141	2-199
1024157	2-17
1024237	3-29
1024249	2-71
1024251	2-143, 4-7
1024260	2-17, 4-21
1024274	2-69
1024389	2-113
1024403	2-121
1024425	2-15
1024464	2-15
1024478	2-17
1024500	2-21
1024535	2-117, 2-123
1024558	2-117, 2-123
1024570	2-97
1024576	2-107, 2-111
1024584	2-105, 2-109
1024586	1-1, 2-105, 2-109
1024591	2-113
1024599	2-117, 2-123
1024641	2-99
1024648	2-99
1024651	2-105, 2-109
1024688	2-139, 2-141
1024695	2-17
1024703	2-99
1024764	2-139
1024853	2-125
1024891	2-125
1024934	2-45
1024977	3-65
1025005	1-2, 3-7
1025100	2-95
1025101	2-201
1025132	2-147
1025140	2-76
1025151	2-105, 2-109
1025159	3-5
1025196	2-21
1025229	2-41, 2-43
1025405	3-15
1025435	2-9
1025445	3-17
1025460	2-103
1025480	2-117, 2-123
1025487	2-75
1025495	2-75
1025544	2-139
1025547	2-137
1025548	2-139
1025551	2-141
1025601	2-103
1025619	2-121
1025620	2-121
1025663	3-65
1025680	2-99
1025736	2-15
1025756	2-127
1025806	2-21
1025841	2-127
1025872	2-125
1025887	2-125
1025888	2-125
1025904	2-79
1025916	2-15
1025990	3-17
1025991	3-17
1025992	3-17
1026003	2-61
1026007	2-99
1026014	2-121

Part Number	Page Number
1026025	2-75
1026051	2-117, 2-123
1026067	3-21
1026074	3-19
1026080	2-91, 2-93
1026108	2-97
1026119	3-15
1026146	3-57
1026222	2-4
1026223	2-4
1026319	2-145
1026352	2-91, 2-93
1026550	2-41, 2-43
1026576	2-69
1026628	2-21
1026645	2-137
1026647	2-145
1026664	2-41
1026665	2-21
1026726	2-21
1026727	2-117
1026733	2-139
1026743	3-61, 4-23
1026759	2-41, 2-43
1026825	2-15
1027007	3-61
1027039	2-123
1027099	2-61
1027103	2-61
1027218	2-9
1027228	2-69
1027233	2-77
1027237	3-61
1027267	2-9
1027284	2-13
1027290	1-1, 2-114
1027313	2-77
1027320	2-139
1027321	2-139
1027353	2-201
1027372	2-201
1027381	2-113
1027560	3-65
1027688	2-5
1027697	2-4
1027716	1-2, 3-7
1027719	1-1, 2-101
1027759	3-67
1027798	3-49, 3-51, 3-52, 3-53
1027800	3-49, 3-51, 3-52, 3-53
1027810	2-95
1027856	2-47, 2-49, 2-51, 2-53
1027916	2-7
1027926	3-11
1027976	3-61
1027978	3-61
1028074	2-119
1028136	2-59
1028173	2-121
1028211	2-121
1028328	2-121
1028343	2-37
1028374	2-101
1028412	2-21
1028516	2-21
1028522	2-121
1028558	2-59
1028559	2-59
1028570	2-121
1028582	3-19
1028635	2-107, 2-111
1028690	2-117, 2-123
1028691	2-117, 2-123
1028697	3-5
1028701	2-117, 2-123
1028711	2-27
1028722	2-35
1028753	2-59
1028769	2-13
1028772	2-13
1028821	2-145
1028822	2-145
1028823	2-145
1028852	2-97
1028924	2-43
1028929	2-59
1028972	2-109
1028979	2-109
1028994	2-59
1029055	3-61
1029057	3-37, 3-61
1029082	2-27, 2-29, 2-35
1029118	3-21
1029128	2-105
1029132	2-105
1029153	3-61
1029155	3-61
1029156	3-61
1029185	2-119
1029293	2-43
1029295	2-43
1029362	2-13
1029379	3-7, 3-9, 4-9
1029399	3-61
1029497	3-5
1029543	3-65
1029545	2-19
1029646	2-79
1029652	2-19
1029748	2-114
1029790	3-61
1029964	2-91, 2-93
1030017	2-9
1030073	2-23
1030404	2-135
1030441	4-26
1030444	4-26
1030511	3-25, 3-33, 3-43
1030549	3-57
1030588	2-15, 2-21
1030593	2-9
1030617	2-114
1030709	2-141
1030863	3-19
1030864	3-19
1030878	3-19
1030910	2-95
1030911	2-95
1030969	2-4
1031011	1-1, 2-105, 2-109
1031017	2-201
1031206	2-15
1031233	2-113
1031235	2-114
1031309	2-123
1031312	2-27, 2-29, 2-35
1031331	1-1, 2-101
1031413	2-95
1031439	2-23
1031553	2-53
1031557	2-19
1031572	3-5
1031575	2-85
1031609	2-49
1031610	2-121
1031614	2-49, 2-53
1031665	2-9, 2-13, 2-15, 2-17, 2-21
1031699	2-121, 4-3
1031796	4-23
1031797	4-23
1031798	4-23
1031799	4-23
1031800	4-23
1031801	4-23
1031802	4-23
1031803	4-23
1031823	1-1, 2-105, 2-109
1031826	2-7
1031827	2-7
1031945	1-1, 2-101
1032216	2-199
1032242	2-55
1032323	2-49, 2-53
1032399	2-77
1032450	2-201
1032578	3-67
1032743	2-91, 2-93
1032812	2-43
1032830	3-55
1032831	3-55
1032869	3-63
1032896	3-63
1033156	2-21
1033297	3-21
1033428	2-55
1033591	2-83
1033624	2-199
1033644	1-1, 2-55
1033746	2-43

Part Number	Page Number
1033897	2-43
1033901	2-43
1033975	2-9
1034147	2-103
1034149	2-103
1034388	2-127
1034655	2-43
1034676	2-43
1034764	2-11
1034765	2-11
1034766	2-11
1034767	2-15
1034768	2-11
1034769	2-11
1034770	2-11
1034878	2-147
1035031	2-55
1035044	2-121
1035068	2-19
1035214	2-67
1035222	2-61
1035530	2-55
1035727	2-103
1035771	2-55
1035794	3-29
1035832	2-9
1035976	2-62
1035997	2-9
1036240	2-85
1036611	2-83
1036801	3-29
1036892	2-13, 2-49, 2-53, 2-65
1036939	2-139
1036944	3-17
1036945	2-137
1036959	2-145
1036965	3-17
1036997	2-119
1037011	3-15
1037032	4-25
1037042	2-141
1037053	2-141
1037235	2-83
1037346	2-7, 2-65, 2-69, 2-85, 2-121, 2-127
1037355	2-65
1037671	2-83
1037805	3-15, 4-15
1037809	3-35
1037816	2-121
1037825	3-25, 3-33, 3-43
1037940	2-71
1037947	2-83
1037970	2-19
1037971	2-19
1038074	2-119
1038115	3-11
1038123	2-89
1038134	2-89
1038137	2-95, 2-99, 2-107, 2-111, 3-11
1038159	4-25
1038258	2-91, 2-93
1038499	2-61
1038566	2-151, 4-19
1038569	2-135
1038805	2-113, 2-114
1038927	2-121
1038941	2-121
1039019	3-5
1039049	2-121
1039064	2-119
1039072	2-121
1039124	2-89
1039149	2-89
1039155	2-89
1039157	2-89
1039163	2-81
1039215	2-81
1039348	2-107, 2-111
1039357	3-29
1039396	2-97
1039521	2-41
1039652	2-121
1039757	2-113, 2-114
1039789	2-151
1040018	2-97
1040117	2-151
1040216	2-137
1040306	2-113
1040318	2-145, 2-147
1040467	2-17, 2-19, 2-62, 2-65, 2-79, 3-37
1040524	2-4
1040620	2-199
1040628	2-139
1040655	2-137
1040800	3-63
1040834	3-13
1040841	2-11
1040863	3-65
1040871	3-65
1040876	2-151
1041006	2-83
1041151	2-37, 2-39
1041152	2-37, 2-39
1041291	2-62
1041815	2-125
1041822	2-13
1041920	2-83
1041953	2-117, 2-123
1041984	2-83
1042003	2-117
1042010	2-123
1042028	2-23
1042499	2-5
1042500	2-5
1042504	2-5
1042710	4-26
1042711	4-26
1042772	2-29, 2-39
1042775	2-139
1042776	2-139
1042968	3-7, 3-9
1043322	2-67
1043481	2-27, 2-37
1043866	3-39
1043897	2-65
1044323	2-81
1044342	3-29
1044343	3-29
1044367	2-151
1044393	3-37
1044993	2-87, 2-89
1045272	3-15
1045415	2-65
1045419	2-65
1045433	2-65
1045444	3-65
1045447	2-65
1045530	2-65
1045759	2-141
1045764	2-61
1045940	2-65
1045964	2-113, 2-114
1046022	2-23
1046039	2-65
1046090	2-19
1046173	3-37
1046798	2-121
1046962	2-65
1046976	3-9
1046980	1-2, 3-9
1046995	3-9
1047002	3-9
1047060	3-9
1047098	2-113, 2-114
1047169	2-9
1047238	1-2, 3-9
1047295	2-9
1047625	4-15
1048295AM	1-1, 2-83
1048474	2-113, 2-114
1048512	2-113, 2-114
1049242	2-83
1049254	3-29, 3-39
1049259	3-29
1049919	2-19
1050003	2-201
1050008	2-201
1050295	3-55
1050436	2-137
1050437	2-137
1052017	3-39
1052170	2-65
1052336	3-39, 4-25
1052726	3-37
1052755	2-201
1052885	2-85

Part Number	Page Number
1053078	3-37
1053320	2-83
1053464	4-25
1053838	2-7, 2-85, 3-13
1054382	2-67
1054558	2-53
1054776	4-25
1055106	2-23
1055139	2-93
1055170	2-35
1055377	2-55
1055381	2-55
1055425	2-55
1056195	3-65
1056232	2-29
1056233	2-35
1056241	2-59
1056300	2-39
1056355	2-49, 2-53
1056566	2-23
1057029	5-11
1057036	2-23
1057052	2-23
1057504	2-65
1057637	4-25
1058935	3-39
1058963	3-37
1059091	1-2, 3-9
1059092	1-2, 3-9
1059195	2-143
1059343	2-71
1059349	2-73
1059372	3-39
1059391	3-39
1059542	2-83
1059640	2-4
1059677	3-37
1060130	2-7, 3-13
1060185	3-37
1060273	3-37
1060291	3-37
1060292	3-37
1060517	4-25
1060596	3-39
1060624	3-37
1060693	3-39
1060695	4-25
1060719	3-37
1060870	3-46
1060871	3-46
1060880	3-46
1060881	3-46
1060942	2-7
1061045	3-43
1061194	2-201
1061973	2-71
1061974	2-73
1062116	2-29, 2-39
1062403	3-39
1062566	2-7, 2-85
1062804	3-37
10632-1	2-85
10632-13	2-85
10632-17	3-52, 3-53, 3-55
10632-19	3-19, 3-29
10632-2	3-5
10632-4	2-85, 3-37
1063456	2-199
1063457	2-199
10832	2-23
10917	4-23
11442-1	2-37, 2-39
11531	2-57, 2-59, 2-61, 2-67
11842	2-77
11984	3-21
12295	2-91, 2-93
12309	2-85
12317	2-7, 2-87, 2-89, 2-99, 3-13
12323	2-85, 3-37
13048	2-39
130773	3-39
13534	2-91, 2-93
13698	2-145
13904	4-11, 4-13, 4-15, 4-17, 4-19
13907	4-7, 4-17
14432	2-47, 2-49, 2-51, 2-53
14595-1	2-75
14605	2-75
14838	2-5
14877	3-3, 3-5, 3-19, 3-29, 3-39
150100	3-19
150516	2-27, 2-37
150525	3-21
150538	3-29
150540	3-29, 4-25
150709	3-29
150713	3-29
15331	2-19
15539	2-5
15543-2	2-47, 2-51
15648	2-117, 2-123
15675	2-91, 2-93, 2-117, 2-123
15678	2-83, 3-29
16213	2-77
16411	1-2
16412	1-2
16431	2-137
16695	4-8, 4-9
16735	2-55, 2-121, 3-11
16931	2-9, 2-15, 2-19, 2-21, 2-41, 2-43, 2-45, 2-47, 2-51, 2-55, 2-65, 2-67, 2-71, 2-75, 2-125
16944	2-79
16968	2-13
17185	2-91, 2-93, 3-19
17284	3-13
17414	2-45
17461	2-87, 2-89, 2-95, 2-107, 2-111, 3-11
17521	2-119
17980	2-17
19064	2-61, 2-83, 3-59
19065	2-15, 3-37
19066	2-15, 2-21, 2-55, 2-69, 2-79, 3-37, 3-47, 3-49, 3-51, 3-52, 3-53, 3-61
19191	3-7, 3-9
19312	2-27, 2-29, 2-35
19313	2-55, 3-55
19315	2-23, 2-27, 2-29, 2-35
19317	2-27, 2-29, 2-35
19583	2-71
19760	2-45
20021	2-85
20170	2-75
20394	2-19, 3-61
20634	2-83
20778	2-69
20833	1-1, 2-103
20944	3-5
20951	3-5, 4-25
20952	3-5
21168	2-21
21195	2-55
21196	3-65
21197	2-41, 2-77
21198	2-143, 3-57
21601	2-101, 3-9
21602	2-101
21603	2-101, 3-9
21606	2-101
21623	2-85
21657	4-22
21659	4-22
21851	2-15
21933	4-21
21934	4-21
21935	4-21
21955	4-9
21956	4-9
21958	4-9
222268	2-81, 2-87, 2-89
222290	2-69
222375	3-43
222463	2-105, 2-109
222496	2-57, 2-59, 2-91, 2-93
222505	2-57, 2-59, 2-103
222516	2-117, 2-123
22290	2-17
22297	2-61, 2-67
22308-6	2-45
223080	2-15
223198	2-95
223470	3-7
223599	2-13

Part Number	Page Number
22790	4-3
23146	2-7, 2-85, 3-13
23156	2-45
23211	2-79
23285	4-3
23498	2-117, 2-123, 2-125, 2-127
23524-1	2-99
23788	2-75
24012	2-57, 2-59
24047	2-45
24105	3-3
24196	3-47, 3-49, 3-51, 3-52, 3-53
24265	2-21, 3-3
24299	2-5
24339	2-71
24358	2-121, 4-3
24543	3-5
24544	3-3, 3-19, 3-29, 3-39
24555	2-101, 2-103, 3-9
24698	3-39
24928-1	2-45
24976	2-23
25014	2-59
25046	3-7, 3-9
25122	1-1, 2-147
25312	3-66
25611	3-7, 3-9
25686	2-91, 2-93
25735	2-103, 2-105, 2-109
26496	2-45
27048	2-37, 2-41, 2-45
27767	2-29, 2-39
28854	4-9
29557	3-11
29558	3-11
29584	2-99
30407	2-61, 2-65
31241	2-127
31354	4-8, 4-9
31375	4-8
31379	4-8
31383	4-8
31543	3-33, 3-43
31613	1-1, 2-147
32126	2-71
32183	2-85, 3-5
32483	2-15, 2-17, 2-25, 2-27, 2-29, 2-31, 2-35, 2-41, 2-43, 2-47, 2-51, 2-57, 2-59, 2-61, 2-65, 2-83, 2-85, 3-37
32485	2-23, 2-55, 2-59, 2-77, 2-95, 2-103, 2-127, 2-143
32486	2-17, 2-23, 2-61, 2-73, 2-85, 3-11
32490	2-9, 2-23, 2-27, 2-29, 2-35, 2-37, 2-61, 2-65, 2-69, 2-75, 2-77, 3-19, 3-21
32491	2-7, 2-9, 2-15, 2-17, 2-19, 2-41, 2-43, 2-45, 2-47, 2-49, 2-51, 2-53, 2-55, 2-59, 2-61, 2-65, 2-67, 2-71, 2-75, 2-77, 2-91, 2-93, 2-95, 2-97, 2-117, 2-121, 2-123, 2-145, 2-147, 2-149, 3-11, 3-13, 3-15, 3-55, 3-63
32492	2-7, 2-15, 2-41, 2-45, 2-59, 2-65, 2-77, 2-85, 2-145, 3-7, 3-9, 3-55, 3-57, 3-65
32493	2-23
32509	4-25
32716	2-45, 2-55
32746	2-5
32975	2-83
32981	2-41, 2-43, 2-125
32982	3-37
32983	2-15, 2-55
32987	2-71
32988	2-55
331380	3-67
331381	3-67
331382	3-67
331383	3-67
331385	3-67
33295	3-3
33373	2-103
33401	2-97
33580	4-5
33671	2-69
33812	2-151
33932	2-21, 2-77, 2-105, 2-109, 3-3, 3-37
34178	4-5
34323	2-127
34359	3-15
34411	2-7, 2-85, 3-13
35493	4-10
35707	2-45
35710	2-45
35904	2-145
360023	2-73
360074	2-73
360270	2-73
360271	2-73
360272	2-73
360273	2-73
360274	2-73
360275	2-73
360276	2-73
360801	2-107, 2-111, 2-121
360802	2-73
360824	2-83, 3-63
360952	2-83
360973	2-114
361044	2-137
361047	3-17
361071	2-13
361073	2-13
361075	2-13
361339	2-65, 2-75, 2-77, 2-85, 2-97, 3-3, 3-19, 3-21
363162	2-101
36328	2-107, 2-111
363301	2-101
363458	2-7
363976	2-9, 2-55
364347	2-75
364441	2-101, 3-15
364587	2-79
364749	2-15
364864	2-75
364948	2-75
365004	3-17
365164	2-47, 2-51
36643	2-45, 2-77, 2-125, 2-127
36644	2-95
36658	2-83
36661	2-83
367313	2-89, 2-99
367679	2-83
367770	2-99
367771	2-7
367949	2-113, 2-114
367974	3-57
368391	2-15
36845	3-11
369359	3-7, 3-9, 3-65
369704	2-69
369745	2-47, 2-49, 2-51, 2-53
369746	1-1, 2-47, 2-49, 2-51, 2-53
369747	2-47, 2-49, 2-51, 2-53
369811	3-3
370100	2-101
371527	2-55
371770	2-37, 2-39
371790	3-67
371854	2-49, 2-53
371855	2-23
371860	2-23, 2-57, 2-59
371861	2-57, 2-59
371863	2-55
371865	2-55
371866	2-23
371869	2-23
371870	2-23
371871	2-55
371872	2-55
371876	2-23
371877	2-23, 2-37, 2-39

Part Number	Page Number
371890	2-23
371931	5-5
371932	5-5
371933	5-5
371934	5-5
371935	5-5
371936	5-5
371937	5-5
371938	5-5
371940	5-8
371941	5-8
371942	5-5
371943	5-8
371944	5-5
371945	5-5
371946	5-5
371947	5-7
371948	5-7
371949	5-7
371950	5-7
371951	5-7
371952	5-7
371954	5-3
371955	5-3
371956	5-3
371957	5-3
371958	5-3
371959	5-8
371960	5-8
371961	5-8, 5-11
371962	5-5
371963	5-5
371964	5-5
371965	5-5
371966	5-5
371967	5-5
371968	5-5
371969	5-5
371970	5-5
371971	5-5
371972	1-1, 2-23, 5-8
371973	5-8
371975	5-8
371976	5-5
371978	5-5
371979	5-5
371980	5-7
371981	5-7
371983	5-7
371984	5-7
371986	5-7
371987	5-7, 5-8
371988	5-7
371990	5-3, 5-7
371991	5-7
371992	5-8
371993	5-7
371994	5-7
371995	5-8
371996	2-23, 5-7
371997	5-7
371998	5-7
371999	5-3, 5-5
372000	5-7
372001	5-7
372002	2-23, 5-7
372003	5-7
372004	5-7
372005	5-7
372007	5-3
372008	5-3
372009	5-11
372010	5-11
372011	5-11
372012	5-11
372013	5-11
372014	5-11
372015	5-11
372016	5-11
372017	5-11
372018	5-3
372019	5-3
372020	5-9
372021	5-9
372022	5-3
372023	5-3
372024	5-3
372025	5-3
372026	5-3
372027	5-3
372028	5-3
372029	5-3
372030	5-3
372031	5-3
372032	5-3
372033	5-3
372034	5-3
372035	5-3
372036	5-3
372037	5-3
372038	5-3
372039	5-3
372040	5-11
372041	5-11
372043	5-11
372044	5-11
372046	5-11
372047	5-3
372048	5-3
372049	5-9
372050	5-9
372051	5-9
372052	5-9
372053	5-9
372054	5-12
372055	5-12
372056	5-12
372057	5-12
372058	5-12
372059	5-12
372060	5-12
372066	5-9
372235	2-199
372236	2-199
372237	2-199
372440	1-1, 2-41, 2-43
372470	2-27, 2-29, 2-35
372482	2-31
372484	2-31
372486	2-25
372489	2-25
372491	2-57
372493	2-25, 2-31
372497	2-32
372498	2-31
372500	2-31
372501	2-32
372503	2-31
372506	2-31
372507	2-31
372510	2-31
372511	2-31
372512	2-31
372514	2-31
372515	2-31
372517	2-31
372518	2-31
372523	2-31
372528	2-31, 2-37
372529	2-37, 2-39
372534	2-25, 2-27, 2-35
372537	2-25, 2-31
372539	2-37, 2-39
372541	2-23
372542	2-25
372543	2-25, 2-27, 2-29, 2-35
372544	2-25, 2-27, 2-29, 2-31
372545	2-25, 2-27, 2-29
372546	2-25
372547	2-25, 2-27, 2-29, 2-31, 2-35
372548	2-27, 2-29, 2-31, 2-35
372549	2-25, 2-27, 2-29, 2-31, 2-35
372550	2-25, 2-27, 2-29, 2-31, 2-35
372554	2-23
372556	2-23
372557	2-55
372558	2-31
372560	5-8
372563	2-25
372566	2-25
372567	5-7
372569	2-31
372572	5-7
372573	5-3
372574	5-3
372575	1-1, 5-12
372576	2-31

Part Number	Page Number
372577	2-31
372579	2-31, 2-35
372580	2-31
372582	2-31
372603	5-12
372605	2-31
372606	2-31
372607	2-31
372608	2-31
372609	2-31
372610	2-31
372611	2-31
372612	2-31
372613	2-31
372615	1-1, 2-31, 2-37
372616	5-11
372857	2-31
372858	2-25
372862	2-23
372863	3-67
372882	5-3
372898	2-31
372953	2-23
373217	4-5
373226	4-5
373236	4-5
373260	4-5
373291	4-5
373297	4-5
373298	4-5
373299	4-5
373317	4-7
373327	4-7
373346	4-7
373347	4-7
373348	4-7
373389	4-7
373391	4-7
373393	4-7
373394	4-7
373395	4-7
373398	4-7
373402	4-7
373413	4-7
373427	4-7
373429	4-7
373434	4-7
373493	4-7
373494	4-7
373631	4-17
373633	4-11, 4-13, 4-15, 4-19
373637	4-11, 4-19
373639	4-11, 4-19
373640	4-11, 4-13, 4-15, 4-17, 4-19
373642	4-13, 4-15, 4-17, 4-19
373646	4-13, 4-15, 4-17
373647	2-151, 4-11, 4-13, 4-15, 4-17, 4-19
373648	4-11, 4-13, 4-17
373656	4-11, 4-13, 4-15, 4-19
373657	4-11, 4-13, 4-15, 4-17, 4-19
373658	4-11, 4-13, 4-15, 4-17, 4-19
373659	4-11
373660	4-11, 4-19
373661	4-13
373662	4-13, 4-15
373663	4-13, 4-15, 4-17, 4-19
373664	4-13, 4-15, 4-17, 4-19
373665	4-17, 4-19
373666	4-17, 4-19
373667	4-17, 4-19
373668	4-17, 4-19
373669	4-17
373670	4-13, 4-17
373671	4-17, 4-19
373672	4-13, 4-15, 4-17, 4-19
373673	4-13, 4-17
373678	4-7
373679	4-7
373680	4-7
373681	4-7
373683	4-15
373684	4-15, 4-19
373685	4-15, 4-19
373686	4-15, 4-19
373688	4-19
374560	2-71
374563	2-71
375321	3-61
375322	3-3
37555	4-8, 4-9
37616	4-5
377236	3-17
377349	2-114, 3-3
377537	1-2
377538	1-2
377540	1-2
37756	4-5
379609	2-71, 4-5
379791	2-87, 2-89
379870	2-107, 2-111
381502	2-75
381858	2-137
381862	2-137
382099	2-95
382224	2-75
382320	2-113, 2-114, 2-121, 3-66
382516	2-13
38255	4-5
383165	2-13
383912	2-41
384418	2-21, 2-105, 2-109
384419	2-21
384442	2-55, 2-57, 2-59
384961	5-5
384962	5-8
384963	5-5
384964	5-5
384966	5-7
384968	5-7
384970	2-37, 2-39
384971	2-37, 2-39
384972	2-27, 2-29, 2-35
384973	2-37, 2-39
384974	2-27, 2-29, 2-35
384975	2-37
384976	2-35
384977	2-37, 2-39
384978	2-37, 2-39
384979	2-37, 2-39
384980	2-35
384983	2-37
384984	2-37, 2-39
384985	2-27, 2-29, 2-35
384986	2-37, 2-39
384990	2-199
384991	2-35
384992	2-27, 2-29
384995	2-27, 2-29, 2-35
384996	2-35
384997	2-199
384998	2-199
384999	2-199
385009	2-43
385029	2-23
385644	3-23, 3-25, 3-31, 3-41, 3-43, 3-61
385685	2-114, 2-121, 3-5
386088	2-77, 2-107, 2-111
386264	2-101
386298	2-101, 3-9
386652	3-5
387237	2-101
387281	2-139
387433	2-101
387500	2-101
388552	5-11
38968	4-5
390994	2-113
391368	2-19
39210	2-93, 2-149, 3-15
392171	2-13
392609	2-125
392629	2-41
392645	2-45
39277	2-7, 2-9, 2-41, 2-43, 2-45, 2-47, 2-49, 2-51, 2-53, 2-61, 2-65, 2-83, 2-117, 2-123, 2-145, 2-147
39278	2-77
39279	2-75
39281	2-103
39283	2-7, 2-9, 2-23, 2-65, 2-145
39284	2-57, 2-59, 3-65

Part Number	Page Number
39285	2-127
39308	2-107, 2-111
39311	2-9, 2-55, 2-83
39312	2-83
393135	2-105, 2-109, 3-63
393209	2-55
393215	2-71, 2-79
393255	3-13
39349	2-9, 2-15, 2-21, 2-55, 2-71, 2-77, 2-107, 2-111, 2-113, 2-117, 2-123
39350	2-71
394916	2-199
394921	2-199
39527	4-8
39534	2-125
395825	2-87
395973	2-149, 3-15
395974	2-149, 2-151, 3-15
396221	2-135
396255	2-137
396266	2-137
396438	2-137
396476	2-149, 3-15
397648	3-57
39785	2-55
39810	2-23
39811	2-95
398279	2-47, 2-49, 2-51, 2-53
398468	2-41, 3-19
398474	3-19
398500	3-61
398501	2-13
398508	2-13
39924	2-85
40362	2-147
40607	2-85
40678	2-145
41130	2-125
41139	2-21
41141	2-97
41142	2-55
41169	2-77
41178	2-15, 2-21, 2-62, 2-65, 2-127
41185	2-107, 2-111
41186	2-55, 2-77, 2-117, 2-123, 2-125, 3-11
41187	2-59, 2-77, 2-99, 2-107, 2-111
41295	3-3, 3-5
41315	2-119
41346	3-11
41359	3-37
41361	2-23
41399	2-77
41430	2-45, 2-61, 2-65, 2-127, 2-145, 3-55, 3-65
41445	2-107, 2-111
41579	4-25
41619	2-95, 2-99, 2-107, 2-111
42011	2-55
42120-1	2-79
42120	2-95
42133A	3-3, 3-19, 3-29, 3-39
42180	2-77
42215	2-127
42223	2-71
42226	2-125, 2-149, 2-151, 3-15
42467	2-77
43555	2-101, 2-117, 2-123
43844	2-25, 2-27, 2-32, 2-37, 2-61, 2-62, 2-67, 3-3, 3-5, 3-29, 3-39
44868	2-91, 2-93, 2-127, 2-143, 2-149, 3-15
44869	2-127, 2-143, 2-147, 3-15
44961	4-25
45622	4-5
45623	4-5
45628	4-8, 4-9
46236	3-49, 3-51
46314	2-25, 2-31
46480	2-149
46481	2-145
46482	2-147, 2-151
46559	2-77
46563	2-75
46785-1	2-99
46800	3-7
47504	3-15
47512	2-143
47513	2-143
47522	2-71, 2-149
47585	2-17
47638	2-79
47719	3-13
47752	2-145
47801	2-71
48079	2-77
48126	2-43
48267	2-41
48790	3-39
48813	4-10
48985	2-95, 3-11
48996	2-55
48998	2-55
49145	2-73
49266	2-13, 2-25, 2-27, 2-65, 2-71, 2-93, 3-19, 3-52, 3-53
49697	2-105, 2-109
49800	2-15, 2-61
49883	2-149
49933	2-125, 2-149, 2-151
50161	2-145
50178	3-13
50335	2-23, 2-77
50544	2-119
50646	2-85
50901	3-39
50960	2-127
51109	2-75
51176	2-23
51305	2-25, 2-27, 2-32, 2-37, 2-61, 2-67
51338	2-71
51339	2-71
51754	2-139
51787	2-145
51824	2-95
51839	2-25, 2-27, 2-29, 2-32, 2-37, 2-39
52405	4-5
53076	2-143
53400-1	2-45
53466	2-7, 2-9, 2-61, 2-69, 2-145, 3-21
53485	2-127, 4-10
53947	2-77
53953	2-77
54017	2-135
54051	2-71
54052	2-71
54087	2-71
54095	4-10
54205	2-77
54274	2-61, 2-65, 2-125, 2-127
54275A	2-125, 2-127
54333	2-27, 2-37, 2-41, 2-43, 2-69, 3-13, 3-19, 3-23, 3-25, 3-29, 3-31, 3-33, 3-39, 3-41, 3-43
54390	2-73
54607	2-75
54615	2-121
54655	2-77
54861	2-125
55272	3-49, 3-51, 3-52, 3-53
55455	2-147
55586	2-91, 2-93, 2-149, 2-151, 3-15
55685	3-15
55845	3-57, 3-59, 3-65
55926	4-7
56078	2-91, 2-93
56185	2-17
56186	3-19, 3-29, 3-37, 3-61
56690	2-17, 2-147, 3-15, 3-17
56692	3-7
56820	2-17, 2-149, 2-151, 3-15
56821	3-7, 3-9

Part Number	Page Number
56835	2-17
56976A	2-45
56992	2-13
57189	2-125
57248	3-29
57297	2-45
57315	2-71
57702	3-65
57804	2-69, 2-199
57946	2-139
58311	2-75
58366	2-67
58494	2-15
58589	2-45
58590	2-45
58592	2-147
58819	2-7, 2-9, 2-76
58842	2-71
58979	2-121
59009	2-75
59156	2-45, 3-11
59194	2-107
59195	2-111
59378	4-10
59542	2-79
59577	2-17, 2-151, 3-17
59633	3-11
59649	2-127
59668	2-76
59735	2-127
59967	2-127
60090	2-145, 3-15
60295	2-69
607775	4-25
61490	4-8, 4-9
61869	2-29
61920	3-47
62471	2-145
62595-15	2-43
630164	3-39
630371	3-3
63175-1	3-11
63233	3-11
63234	2-77
63244-2	3-3
63245-1	3-19
63378	2-45
63430	3-57, 3-59
63448	3-57, 3-59
63451	3-57, 3-59
63468	2-103
63810	2-25, 2-27, 2-29, 2-32, 2-37, 2-39, 2-119, 3-3, 3-5, 3-13, 3-23, 3-25, 3-31, 3-33, 3-41, 3-43, 3-61
63923	4-22
63987-1	3-39
64379	2-87
64425	2-103, 2-105, 2-107, 2-109, 2-111, 3-7
64743	3-19
64778	3-39, 3-61
65145-1	2-143
65180	2-103
65215	2-147
65230	4-9
65241	4-8
65441	2-77
65580	3-59
65581	3-39
65695	2-91, 2-93
67004	3-57, 3-59
67555	2-95
67767	2-37, 2-61, 2-77
67811	2-143
68866	2-77
68869	2-69
69173	2-149, 2-151
69582	2-75
69657	3-57, 3-59
69659	3-57, 3-59
69785	2-114
70096	4-7
70100	4-7
70157	2-9
70563	2-91, 2-93
70622	2-17
70623	2-17
70709	2-17
70717	2-17
71204	2-99
71340	2-71
71341	2-71
71367	2-75
71369	2-95
71556	2-137
71607	2-107, 2-111
71726	2-147
71727	2-149, 2-151
71729	2-91, 2-93, 4-8
71735	2-137
71741	2-137
71868	3-11
71869	3-11
71874	3-11
71941	2-19
72897	2-79
72926	2-71
72968	3-39, 3-59
72970	2-17
73027	2-17
73260	3-3, 4-22
73281	2-71
73342	4-3
73411	2-77
73433	3-3
73468	3-3
73471	2-25, 2-27, 2-32, 2-37, 2-61, 2-67
73736	2-13
74077	2-21
74090	2-117, 2-123
74094	4-8, 4-9
74095	4-8
74098	4-8, 4-11, 4-17, 4-19
74099	4-8
74100	4-8, 4-9
74122	4-5
74123	4-5
74125	4-5
74165	4-5
74166	4-5
74167	4-5
74168	4-5
74180	4-7
74183	4-21
74185	4-21
74193	4-21
74196	4-21
74222	4-21
74225	4-7
74226	4-7
74232	4-21
74233	2-125, 4-10
74237	4-7
74243	4-21
74244	4-21
74245	4-21
74250	4-8, 4-9
74440	2-77
74454	2-127
74455	2-7, 2-61, 2-145
75456-3	2-125
75456-4	2-125
75968	2-17
76099	2-97, 3-21, 3-25, 3-33, 3-43
761490	2-7, 3-13
762249	3-19
762282	2-29, 2-39
762514	2-69
763042	2-81
763090	2-95
763114	3-19
763115	3-52, 3-53
763116	2-83, 3-19, 3-25, 3-33
76316	2-149, 3-17
76426	2-121
76570	2-117, 2-123
768481	2-17
76888	2-15
76958	2-55
769785	3-61
77003	4-11, 4-17
77005	4-11, 4-13, 4-15, 4-17
77006	4-17

Part Number	Page Number
77097	2-87, 2-89, 2-99, 2-107, 2-111, 2-149, 2-151, 3-11
77098	2-95, 3-11
77221	2-201
78122	2-45
78398	3-3, 4-3
78829	4-3
78830	4-3
78833	4-3
78836	4-3
78838	4-3
78839	4-3
78840	4-3
78841	4-3
78842	4-3
78843	4-3
78875	4-22
78950	4-23
78951	4-23
78952	4-23
79273-1	3-23, 3-25
79273-2	2-119
79380	2-125
79484	3-3
79497	3-3
79506	2-117, 2-123
79729	4-5
79828	4-5
80288	2-9
80395	2-101, 2-117, 2-123
80409	2-103
80950	2-103
81784	2-107, 2-111
81952	2-103
82727	2-9
82739	2-85
82839	3-13
83578	2-25, 2-27, 2-32, 2-37
83874	1-1, 2-101
83879	2-77
84170	2-77
84597	1-2
86508	3-3
86636	2-121
86659	2-73
86751	2-75
86759	3-7
86866	2-95
87536	2-13
87631	2-91, 2-93
87730	2-41
87738	2-67
87816	2-107, 2-111
87866	1-1, 2-13
9000355	2-41, 2-43
9000845	3-51, 3-53
9000846	3-49, 3-52
9000879	3-49, 3-51, 3-52, 3-53
9001310	3-61
9001314	3-55
9001316	3-66
9001321	3-47
9001327	3-49
9001331	3-51
9001334	3-57, 3-59
9001338	3-65
9001717	3-53
9001718	3-52
9002380	2-9
9002381	2-9
9002391	2-13
9002392	2-13
9002393	2-61
9002394	2-57, 2-59
9002395	2-41
9002398	2-147
9002399	2-7
9002400	2-7
9002401	2-7
9002409	2-9
9002435	2-13
9002553	1-1
9002554	1-1
9002555	1-1
9002613	1-1
9002683	2-127
9002684	2-125
9002708	4-3
9002709	4-3
9003008	4-26
9003009	4-26
9003068	2-114
9003069	2-113
9003070	2-114
9003071	2-113
9003313	2-121
9003345	5-3
9003390	2-27, 2-29
9003391	2-35
9003422	2-9
9003423	2-9
9003425	2-9
9003426	2-9
9003428	2-9
9003429	2-9
9003431	2-9
9003432	2-9
9003433	2-9
9003449	2-121
9003453	2-13
9003455	2-125
9003461	2-125
9003610	2-43
9003793	2-117
9003794	2-123
9003832	2-59
9003926	3-67
9004117	2-113
9004475	4-19
9004493	2-101
9004514	4-26
9004515	3-29, 4-26
9004674	5-11
9004675	5-11
9004880	2-13
9004983	2-59
9006257	3-67
9006334	2-7, 2-85, 3-13
9006386	2-93
9006398	2-91, 2-93
9006618	2-35
9006619	2-29, 2-35
9006620	2-39
9006634	2-23
9006635	2-23
9006811	2-65
9006813	2-65
9006895	2-23
9006917	2-55
9007088	2-55
9007142	2-143
9007380	1-1, 2-39
9007381	1-1
9007382	1-1
9007423	2-35
9007424	2-35
9007513	2-7
9007552	2-39
9007553	2-39
9007882	3-37, 4-25
9007883	4-25
9007912	2-13
9007913	2-13
9008197	2-23, 5-7

PART DESCRIPTION TO PAGE NUMBER CROSS REFERENCE LIST

A

Ace, Thrust, Motor, Hyd [En], 4-9
Actuator, Valve, By-Pass [En], 4-7
Adapter [1.6], 2-31
Adapter [E100 Mixer Gm 1.6l 2010], 2-29, 2-35
Adapter, Intake, Throttle Body, 2-25, 2-27, 2-35
Adapter, Plate, 2-31
Adapter, Rod-End, Side Brush, 3-11
Adapter, Throttle Body, 2-31
Adapter, Valve, 400mm [Bosch], 2-35
Adapter, Valve, Fuel Trim, 2-31
Alarm Assy, Backup, 12-24vdc 82-107dba, 3-47
Alarm Kit, Backup, Ci [M20 And T20], 3-47
Alarm, 9-48vdc, 95 Db(A) [Ec-H20], 3-37
Alarm, Warning [Sonalert, St628], 2-69
Alternator, 12vdc 075a [Multi Grv], 2-55
Angle, Brace, Shrd, 2-21
Angle, Lh, 2-99
Angle, Mtg, Stl, .12 1.6 1.6 02.2l, 2-145
Angle, Mtg, Valve, 3-13
Angle, Retainer, 2-81
Angle, Rh, 2-99
Angle, Sppt, Fan, 2-125
Angle, Sppt, Tank, Rear, 2-113
Arm [Positioning], 2-77
Arm Wldt, Lift, Sqge, Lh, 2-111
Arm Wldt, Safety, Sppt, Seat, .38d 06.5d, 2-15
Arm Wldt, Safety, Sppt, Seat, .38d 10.1l, 2-121
Arm Wldt, Sqge, Lift, Rh, 2-107
Arm, Cntrl, Pintle, Centering, 2-77
Arm, Lever, Brake, 4.1 [Knott], 2-73
Arm, Link, 3-11
Arm, Pinch, 2-117, 2-123
Arm, Pintle, 2-77
Arm, Rocker, Valve, 5-3
Arm, Sqge, Side, Lh, 2-111
Arm, Sqge, Side, Rh, 2-107

B

Bag, Power, 3-59
Ball, Camshaft, 5-11
Bar Wldt, Retainer, Sqge, Rear, 2-101
Bar, Flat, Ss, .06 X .50 X 10.0l 2/.19sl, 2-13
Bar, Flat, Stl 0.19, 01.50 X 04.1l, 2-71
Bar, Isolator, Vacfan [M20 2007], 2-127
Bar, Mtg, Hppr Cover, 2-83
Bar, Mtg, Hppr, 2-81
Bar, Retainer, 3-7
Bar, Rnd, Plstc, 0.31d 12.5l, 2-113, 2-114
Base Assy, Fan, W/O Pulley, 2-55
Battery, 12vdc, 0475cca, Ah, Wet, 2-69
Battery, Wet, 12vdc 0475cca, 1-1
Bearing Kit [Cl], 4-21
Bearing Kit, Cshft, 1.989-1.995mm (Brown), 5-5
Bearing Kit, Cshft, 1.989-1.995mm (Green Blue), 5-5
Bearing Kit, Cshft, 1.995-2.001mm (Brown Blue), 5-5
Bearing Kit, Cshft, 1.995-2.001mm (Green), 5-5
Bearing Kit, Cshft, 2.114-2.120mm, 5-5
Bearing Kit, Cshft, 2.120-2.126mm, 5-5
Bearing Kit, Rod, Connecting, Std, 5-5
Bearing, Ball, 0.98b 2.05d 0.59w, 2-91, 2-93
Bearing, Ball, 1.18b 2.44d 0.63w, 2-73
Bearing, Ball, 20mm B 42mm D 12mm W, 2-55
Bearing, Cone, 1.38b 0.71w, 2-71
Bearing, Cone, Pump, Hyd, 4-7
Bearing, Cup, 2.56d 0.55w, 2-71
Bearing, Cup, 4-7
Bearing, Flng, 2-Hole, 0.50b, 2-17
Bearing, Flng, 2hole, 0.50b [Nyl], 2-17
Bearing, Pillowblock, 1.02b [Solid Pye], 2-75
Bearing, Self Align, 0.75b 1.25d, 2-95
Bearing, Self Align, 1.25b 2.00d, 2-79
Bearing, Split, 1.00b, 2-75
Bearing, Thrust, 0.53b 1.00d 0.03w, 3-11
Bearing, Thrust, Pump, Hyd, 4-7
Bearing, Thrust, 4-9
Bellcrank, Lift, Sqge, 2-99
Belt, Ribbed, 38.5l, 1-1, 2-55
Belt, Timing [Gm1.6l], 5-11
Blade, Sqge, .38 3.55w 038.3l, Linatex, 2-105, 2-109
Blade, Sqge, .38 3.55w 038.3l, Ure (Option), 2-105, 2-109
Blade, Sqge, .38 3.55w 038.3l, Ure, 1-1
Blade, Sqge, 37.08l Linatex, 1-1
Blade, Sqge, Front [Linard], 1-1
Blade, Sqge, Front, 49.58l Linatex, 2-101
Blade, Sqge, Front, 49.58l Ure (Option), 2-101
Blade, Sqge, Front, 49.59l Pyu, 1-1
Blade, Sqge, Rear, 53.78L Pyu, 1-1
Blade, Sqge, Rear, 53.78l Ure (Option), 2-101
Blade, Sqge, Rear, Linatex, 1-1, 2-101
Blade, Sqge, Side Brush, Linatex, 1-2, 3-9
Blade, Sqge, Side Brush, Urethane, 1-2, 3-9
Block, Centering, 2-99
Block, Guide, Hppr, 2-7
Block, Short, Eng, W/ Piston & Ring, 5-5
Bolt, Bracket, Sensor,Cshft Position, 5-7
Bolt, Bracket,Screen,Oil Pump,M6x1x1, 5-7
Bolt, Camshaft Cover, 5-3
Bolt, Carriage, M06 X 1.0 X 30, 2-87, 2-89
Bolt, Carriage, M06 X 1.00 X 40, 4.6, 3-37
Bolt, Carriage, M10 X 1.5 X 70, 2-103
Bolt, Connecting Rod, 5-5
Bolt, Cover, Camshaft, M6 X 1 X 22, 5-11
Bolt, Cover, Oil Pump, M6 X 14, 5-7
Bolt, Cover, Water Pump, 5-7
Bolt, Eng Cover, M6 X 1 X 13, 5-11
Bolt, Eye, .25-20 X 1.40 X .25 Eye, 2-77
Bolt, Eye, M08 X 1.25 X 070mm, 05.50 Eye, 2-107, 2-111
Bolt, Eye, M10 X 1.5 X 117mm, 8.0 Eye, 2-99
Bolt, Eye, M8X1.25, 2.75L, 2-77
Bolt, Flywheel, 5-5
Bolt, Head. Cyl, 5-3
Bolt, Hsng, Thermostat, 5-3
Bolt, M06 X 1.00 X 13mm, 5-8
Bolt, M08 X 1.25 X 25mm, 5-5
Bolt, M10 X 1.50 X 75mm, 5-5
Bolt, M12 X 1.75 X 62mm, 5-5
Bolt, Motor, Hyd, 4-5
Bolt, Oil Pump Screen/Camshaft Cover, 5-7
Bolt, Pan, Oil, 5-8
Bolt, Pulley, Cshft, 5-5
Bolt, Pump, Oil, 5-7
Bolt, Retainer, Camshaft, M6 X 1 X 16, 5-11
Bolt, Sensor, Position, Cshft, 5-7
Bolt, Shield, Manifold, Exhaust, 5-9
Bolt, Shld, .31d X 1.00, .25-20, 2-77
Bolt, Shld, 1.37d X 5.13l,1.1-18 Drilled, 2-71
Bolt, Soc Head, M5 X 80 X 35, 2-35
Bolt, Sprocket, Camshaft, M10x1.25x60, 5-11
Bolt, Tensioner [GM], 5-11
Bolt, Tensioner, Timing Belt,M8x1.25x48, 5-11
Bolt, Tube [Pvc], M6 X 1 X 15, 5-3
Boot, .63id .29l .90w, 2-13
Boot, Bellows, 3.1l 4.4w 2.8h 1hole, Neo, 2-17
Boot, Circuitbreaker, 3-37
Boot, Switch, Ignition, 2-13
Bracket Kit, Alternator, Repair, 2-55
Bracket Wldt, Alternator, Lower [Gm1.6l], 2-55
Bracket Wldt, Cooler, Hyd Fluid, 2-145
Bracket Wldt, Flap, Recirculation, 2-97
Bracket Wldt, Guard, Sqge, 3-65
Bracket Wldt, Latch, 2-19
Bracket Wldt, Mtg [Fast Gen 2+], 3-29
Bracket Wldt, Mtg [Fast], 3-21
Bracket Wldt, Mtg, Caster, 2-103
Bracket Wldt, Mtg, Eng, Back, Gas/Lpg, 2-23
Bracket Wldt, Mtg, Eng, 2-23
Bracket Wldt, Mtg, Fan, Upper, 2-65
Bracket Wldt, Mtg, Reg, Lpg[Gm 2010], 2-39
Bracket Wldt, Mtg, Regulator, Lpg, 2-37

Bracket Wldt, Mtg, Side Brush Fixed, 3-9
Bracket Wldt, Mtg, Side Brush, 3-7
Bracket Wldt, Mtg, Sqge, 2-103
Bracket Wldt, Mtg, Tank, 2-9
Bracket Wldt, Pivot, Hppr Door, Lh, 2-87, 2-89
Bracket Wldt, Pivot, Hppr, Rh, 2-89
Bracket Wldt, Propel, Pintle, 2-77
Bracket Wldt, Steering, Tilt, 2-17
Bracket Wldt, Tank, Soltn, Rh, 2-113
Bracket Wldt, Tilt, Rh, 2-17
Bracket, Anchor, Strap, Alternator, 2-55
Bracket, Cover, Hopper, 2-87, 2-89
Bracket, Cover, Hppr, 2-83
Bracket, Cover, 2-65, 2-87, 2-89
Bracket, Fan, Lh, 2-65
Bracket, Fan, Rh, 2-65
Bracket, Fan, Upper, Lh, 2-65
Bracket, Ftg, Bh, 2-61
Bracket, Guide, Shrd, 2-21
Bracket, Keeper, Latch, 2-114
Bracket, Latch, Cover, 2-21, 2-114, 3-63
Bracket, Latch, Keeper [Southco], 2-21
Bracket, Latch, Shrd, Seat, 2-15
Bracket, Lip, Hppr, 2-87, 2-89
Bracket, Mtg [Ecu], 2-25, 2-31
Bracket, Mtg [Fast Gen 2+], 3-29
Bracket, Mtg [Fast], 3-21
Bracket, Mtg, Cable, 2-75
Bracket, Mtg, Cover (Replaced by 9003893), 2-121
Bracket, Mtg, Cover, Recvy Tank, 2-121
Bracket, Mtg, Cyl, 2-77, 2-107, 2-111
Bracket, Mtg, Detgt And Spray Wand, 3-5
Bracket, Mtg, Ecu [M20/T20 2007], 2-27, 2-29
Bracket, Mtg, Ecu, 2-35
Bracket, Mtg, Fan, 2-125
Bracket, Mtg, Fltr, Air, 2-47, 2-49, 2-51, 2-53
Bracket, Mtg, Fuel, 2-41
Bracket, Mtg, Insulation, 2-9
Bracket, Mtg, Latch, Tank Cover, 2-113, 2-114
Bracket, Mtg, Latch, 2-61
Bracket, Mtg, Lift, Scb Head, 2-95
Bracket, Mtg, Mirror, Rearview, 3-55
Bracket, Mtg, Motor, 2-125, 2-127
Bracket, Mtg, Muffler [M20/T20 2007], 2-59
Bracket, Mtg, Prop Rod, 2-121
Bracket, Mtg, Radiator, 2-61, 2-65
Bracket, Mtg, Scb Head, Lh, 2-95
Bracket, Mtg, Scb Head, Rh, 2-95
Bracket, Mtg, Skirt, Brush Door, 2-105, 2-109
Bracket, Mtg, Skirt, Door, Brush, 2-105, 2-109
Bracket, Mtg, Skirt, Door, 2-105, 2-109
Bracket, Mtg, Skirt, 2-97
Bracket, Mtg, Spray Handle, 3-61
Bracket, Mtg, Spray Wand [Fast, Conv], 3-61
Bracket, Mtg, Spring, 2-95
Bracket, Mtg, Sqge, 3-7
Bracket, Mtg, Strainer, 3-5
Bracket, Mtg, Switch, 2-85
Bracket, Mtg, Vacuum Wand, 3-57
Bracket, Mtg, Valve [Combined], 2-151
Bracket, Mtg, Valve, Hyd, Scb, 2-149
Bracket, Mtg, Valve, Hyd, Swp, 2-149
Bracket, Mtg, Valve, Lower, 2-151
Bracket, Mtg, Valve, 2-119, 3-3
Bracket, Mtg, 2-9
Bracket, Muffler, Hanger, Front, 2-57
Bracket, Pivot, Hppr Door, Rh, 2-87
Bracket, Propel, Gas/Lpg, 2-77
Bracket, Protector, Float Switch, 2-121
Bracket, Reg [1.6l], 2-31
Bracket, Retainer, Pump, 3-29
Bracket, Retainer, Safety, 2-77
Bracket, Retainer, Shield, Heat, 2-57
Bracket, Retainer, Spring, 2-5
Bracket, Retaining, Cover (Replaced by 9003893), 2-121
Bracket, Retaining, Hose, 2-117, 2-123, 3-63
Bracket, Retaining, Wire, Sparkplug, 5-12
Bracket, Screen, Oil Pump, 5-7
Bracket, Seat, Adj, 2-15
Bracket, Sensor, Position, Cshft, 5-7
Bracket, Shield, Heat, 2-21
Bracket, Skirt, Rbr, 2-65
Bracket, Soltn, Tank, Cntr, 2-113
Bracket, Sppt, Cover, Tank, Recvy, 2-121
Bracket, Sppt, Radiator, Upper, 2-62
Bracket, Sppt, Revl Light, 3-47, 3-49, 3-51
Bracket, Sppt, Tank, Lh, 2-121
Bracket, Sppt, Tank, Rh, 2-121
Bracket, Tank, Soltn, Lh, 2-113
Bracket, Tilt, Lh, 2-17
Bracket, Tube, Coolant, 2-67
Bracket, Valve, Sba [M20 And T20], 3-15
Brake Assy, Drum, Mech, 07.0d 1.2w, 2-73
Brush Assy, Disk, Scg, 16.0 D, Heavy Duty Polypropylene, 2-5
Brush Assy, Disk, Scg, 16.0 D, Soft Nylon, 2-5
Brush Assy, Disk, Scg, 16.0 D, Super Abrasive, 2-5
Brush Assy, Disk, Swp, 24.0d, Polypropylene, 2-5
Brush, Swp / Scb, 40l, Heavy Duty Polypropylene, 2-4
Brush, Swp / Scb, 40l, Polyester, 2-4
Brush, Swp / Scb, 40l, Polypropylene, 2-4
Brush, Swp / Scb, 40l, Super Abrasive, 2-4
Brush, Swp / Scb, 40L, Wndw, Super Abrasive, 2-4
Brush, Swp / Scb, 40l, Wndw, Polypropylene, 2-4
Bumper Wldt, Brush, Side, 3-7, 3-9
Bumper, Rbr, 0.5d 0.16t M5 X 08, 2-77
Bumper, Rbr, 0.6d 0.34t .3d Tip, 2-145
Bumper, Sqge, 2-101
Bumper, Ure, 1.50d 1.25l, 3-65
Bushing, Eccentric, Adj, 2-117, 2-123
Bushing, Flng, 0.32b 0.50d 0.24l, Bnz, 2-103
Bushing, Flng, 0.50b 0.59d 0.38l, 2-117, 2-123
Bushing, Flng, 0.63b 0.75d 0.38l, 2-103, 2-105, 2-109
Bushing, Flng, 1.00b 1.13d 0.50l, 2-89, 2-99
Bushing, M06-1.50 X .25-27npt, 2-25, 2-31
Bushing, Pivot, Door, 2-87
Bushing, Sleeve, 0.37b 0.50d 0.50l, Oib, 2-75
Bushing, Sleeve, 0.50b 0.59d 0.50l, Bnz, 3-11
Bushing, Sleeve, 0.62b 0.72d 0.50l, Fgl, 2-103
Bushing, Sleeve, 0.63b 0.72d 0.38l, 2-107, 2-111
Bushing, Sleeve, 0.75b 0.88d 0.25l, 2-117, 2-123
Bushing, Sleeve, 0.75b 0.88d 0.75l, Tef, 2-87
Bushing, Sleeve, 0.78b 0.86d 0.93l, Bnz, 2-73
Bushing, Sleeve, 0.88b 1.00d 0.75l, Bnz, 2-79
Bushing, Sleeve, 1.00b 1.13d 1.50l, Fgl, 3-11
Button, Cntrl, Horn, 2-17
Bypass Valve Kit, Pump, Repair,, 4-23

C

Cable, Battery, 02ga 48.0l Red .41ring, 2-69
Cable, Battery, 02ga 60.0l Blk .41ring, 2-69
Cable, Glv .06d 012.0l .26eye /.26eye, 3-65
Cable, Glv .09d 016.5l .38eye /.38eye, 2-19
Cable, Glv .13d 015.8l .50eye /.50eye, 2-107, 2-111
Cable, Push / Pull, 063.0l 4.0, .31-24, 2-75
Cable, Push / Pull, 098.0l .25-28/.25-28, 2-77
Cam, Centering, Pintle, 2-77
Cam, Front, 3-9
Cam, Plt, Brake [Nickel], 2-73
Cam, Rear, 2-101
Cam, 2-101
Camshaft, 5-11
Cap Assy, Tank, Drain, 2-121, 4-3
Cap Screw Cl, 4-9
Cap Screw, 4-8
Cap, Arm, Lift, 2-85
Cap, Breather, Hyd, 2.4 Ds, 1-1, 2-147
Cap, End, Valve, Steering, 4-21
Cap, Filler, Oil, W/ Org, 5-3
Cap, Fuel, Tank, 2-43
Cap, Hub, Dust 2.57d 0.77l, 2-73
Cap, Radiator, 14psi [Stant Ao-2516], 2-61

Cap, Radiator, 16 Psi, 2-65
Cap, Spring, Valve, 5-3
Cap, Tank, Fuel, 2.3neck 2.6d, 2-41
Cap, Tank, 3-5
Capacitor, Plug [4700uf, 25v], 3-46
Cartridge, Psi Cntrl, Valve, Hyd, 4-13, 4-15, 4-17, 4-19
Caster, Pivot, 2-103
Catch, Latch, Tank Cover, 2-113, 2-114
Chain, Str, 4/0, 08 Link, 2-99
Channel Wldt, Pivot, 3-11
Channel, Shield, Muffler [M20/T20 2007], 2-59
Channel, Shield, Muffler, 2-57
Channel, Upper, Tower, Lift, 2-7
Chech Valve Kit, Pump, Repair,, 4-23
Circuitbreaker, 2.0a, Resetable, 3-37
Clamp Wldt, Front, 2-101
Clamp Wldt, Rear, 2-101
Clamp, Cable, Ss, 0.50d X 0.50w [Insul], 4-25
Clamp, Cable, Ss, 1.12d X 0.38w, 1h, 2-119
Clamp, Cable, Ss, 2.50d X 1.00w, 1h, 2-9
Clamp, Cable, Stl, 0.25D X 0.56W, 1Hole, 3-49, 3-51
Clamp, Cable, Stl, 0.44d X 0.62w, 1h, 2-145
Clamp, Cable, Stl, 0.69d X 0.62w, 1h, 2-61, 2-77
Clamp, Cable, Stl, 0.69d X 0.62w, 1hole, 2-37
Clamp, Cable, Stl, 1.25d X 1.00w, 1hole, 2-67
Clamp, Cable, Stl, 1.50d X 1.00w, 1h, 2-9, 2-61, 2-69, 2-145, 3-21
Clamp, Cable, Stl, 1.50d X 1.00w, 1hole, 2-7
Clamp, Cable, Stl, 2.00d X 0.75w, 1 Hole, 2-41
Clamp, Cable, Stl, 2.00d X 0.75w, 1hole, 2-43
Clamp, Hose, 1.0, 2-37, 2-39
Clamp, Hose, 1.75 [Pcv], 5-3
Clamp, Hose, Plstc .351-.394 Id, 3-21
Clamp, Hose, Spring Stl, 0.86d X 0.38w, 2-47, 2-49, 2-51, 2-53
Clamp, Hose, Spring, 0.62d, 2-37, 2-39
Clamp, Hose, Spring, 0.75d, 2-37, 2-39
Clamp, Hose, Wir, .52 - .56, Yel, 4-25
Clamp, Hose, Wir, .63 - .66, Blk, 4-25
Clamp, Hose, Wormdrive, 0.25-0.62d, .31w, 2-25, 2-27, 2-32, 2-37, 2-61, 2-62, 2-67, 3-3, 3-5, 3-29, 3-39
Clamp, Hose, Wormdrive, 0.31-0.88d, .31w, 2-27, 2-37, 2-41, 2-43, 2-69, 3-13, 3-19, 3-23, 3-25, 3-29, 3-31, 3-33, 3-39, 3-41, 3-43
Clamp, Hose, Wormdrive, 0.56-1.06d, .56w, 2-25, 2-27, 2-29, 2-32, 2-37, 2-39, 2-119, 3-3, 3-5, 3-13, 3-23, 3-25, 3-31, 3-33, 3-41, 3-43, 3-61
Clamp, Hose, Wormdrive, 1.06-2.00d, .56w, 2-57, 2-59, 2-61, 2-67
Clamp, Hose, Wormdrive, 1.56-2.50d, .50w, 2-61, 2-67
Clamp, Hose, Wormdrive, 1.81-2.75d, .50w, 2-47, 2-49, 2-51, 2-53
Clamp, Hose, Wormdrive, 2.50-3.50d, .50w, 2-101, 2-117, 2-123
Clamp, Hose, Wormdrive, 3.56-4.50D, .50W, 2-125
Clamp, Hose, Wormdrive, 3.56-4.50d, .50w, 2-117, 2-123, 2-127
Clamp, Hose, Wormdrive, 3.75-4.62d, .62w, 2-125
Clamp, Hyd, 0.50d, 2-91, 2-93
Clamp, Mtg, Fltr, Air, 2-47, 2-49, 2-51, 2-53
Clamp, Muffler, 1.62d, 2-57, 2-59
Clamp, Spring, 1.50, 2-49, 2-53
Clevis, Adj, 0.25 Pin, 0.25-28 Rh, Pl, 2-75
Clevis, Adj, 0.25pin, 0.25-28left Pl, 2-75
Clevis, Adj, 0.31pin, 0.31-24, 2-75
Clip, .250h, Plstc [Pine-Tree], 2-21
Clip, Grip, Finger, .875-1.25, 3-61
Clip, Grip, Finger, 0.88-1.25d, 3-37
Clip, Grip, Finger, 1.00-1.88d White,Vyl, 3-57, 3-59
Clip, Keeper, Open, 2-61, 2-65
Coil, Ignition, 5-12
Column, Pump, Water, 4-3
Column, Steering, 09.9l 0.86d 36tooth, 2-17
Complete Pump Kit, Pump, Repair,, 4-23
Connector, Fem, 02cav, Mp280 Sealed, 4-23
Connector, Fuel, E90, Qf, 2-41
Connector, Fuel, Qf, 2-41, 2-43
Controller Kit, Replmt [Ec-H20], 4-25
Converter, Ele, 12-36 Vdc, 3-37
Converter, Lpg, 2-31
Cooler, Hyd, 25gpm 325btu Of12 13x12x2, 2-145
Coupler, Pump, 4-7
Coupling, Drive, 13t, 2-23
Coupling, Nozzle, Spray, 3-61
Cover Kit, Soltn Tank, Rh [M20 & T20], 2-113
Cover Kit, Switch, Float, Repair, 2-121
Cover Kit, Tank, Soltn, Lh, Replmt, Ce (Japan and CE Only), 2-114
Cover Kit, Tank, Soltn, Lh, Replmt, 2-114
Cover Kit, Tank, Soltn, Rh, Replmt, Ce (Japan and CE Only), 2-113
Cover Wldt [Fast], 3-21
Cover Wldt, Power Supply, 3-37
Cover, Belt, Timing, Front, 5-11
Cover, Belt, Timing, Upper Front, 5-11
Cover, End, 4-7
Cover, Fuse, Block, 2-69
Cover, Hose, 2-37, 2-39
Cover, Hppr, 2-83
Cover, Hsng, Camshaft, 5-3, 5-11
Cover, Lower, 2-15, 2-21
Cover, Pump, Oil, 5-7
Cover, Tank, Recvy, Trimmed, 2-121
Cover, Tank, Soltn, Lh, Trimmed, Ce (Japan and CE Only), 2-114
Cover, Tank, Soltn, Lh, Trimmed, 2-114
Cover, Tank, Soltn, Rh, Trimmed, Ce (Japan and CE Only), 2-113
Cover, Tank, Soltn, Rh, Trimmed, 2-113
Cover, Tank, 2-121
Cover, Trimmed, 3-37
Crank Kit, Pump, F/79323, Replmt, 4-22
Crankshaft, 5-5
Crossmember Wldt [M20], 2-103
Cup Holder, Rwk, 2-13
Cylinder, Hyd, 1.5b 07.8l 02.75strk 2500, 3-11
Cylinder, Hyd, 1.5b 07.8l 02.80strk 2500, 2-95, 2-99, 2-107, 2-111, 3-11
Cylinder, Hyd, 2.0B 24.1L 15.00Strk 3000, 2-79
Cylinder, Hyd, 2.0b,15.2l,09.00strk,3000, 2-71

D

Detergent Pkg, 4 Liter, Sgl [Tco 665], 3-21
Diaphragm Kit, Pump, Repair,, 4-23
Diode, Ele, Plug, 2-69
Dipstick, Oil, 5-8
Door Cyl, Hppr [Mako], 2-87, 2-89
Door Wldt, Brush, Idler, 2-91, 2-93
Door Wldt, Brush, Lh, 2-111
Door Wldt, Brush, Rh, 2-107
Door Wldt, Brush, 2-91, 2-93
Door Wldt, Hppr, 2-87, 2-89
Drive [Cl], 4-9
Drive, Motor, Hyd, 4-5
Drive, 4-8

E

Electrode, 5 Plate, High Flow, 4-25
Electrode, Cylindrical, 4-25
Element, Fltr, Air [Dn], 1-1, 2-47, 2-49, 2-51, 2-53
Element, Fltr, Air, Safety (Option), 2-47, 2-49, 2-51, 2-53
Element, Fltr, Oil, Eng, Spin-On, 1-1, 2-23, 5-8
End Cap, Motor, Hyd [En], 4-9
End Cap, 4-8
Engine [Long Block Gm 1.6l] (See Engine Breakdown), 2-23
Extinguisher Kit, Fire, Ci [M20 And T20], 3-66
Extinguisher, Fire, 2.5 Lb Dry, 3-66

F

Fan Kit, Scrub, Replmt [M20/T20], 2-125
Fan Wldt, Vac, Inlet, 2-127
Fan, Cooling, 15.5d, 6 Blade, .5b Taper, 2-55
Fan, Cooling, Pusher, 15.5D [2007], 2-55
Fast 665 4 Ltr, Detergent, 3-29
Fast Kit, Ci, Injector Filters[Fast Ii+], 4-26
FaST Kit, Ci, Injector Rebuild[FaST II+], 4-26
Fast Kit, Ci, Injector Seals [Fast Ii+], 4-26
FaST Kit, Injector, CI[M20/M30 FaST II+], 4-26
Fast Kit, Injector, Ci[M20/M30 FaST II+], 3-29
Filter Assy [Pt4 936498], 1-1, 2-147
Filter Assy, Air, Mold, Ure, 3-21
Filter Assy, Air, 2-47, 2-49, 2-51, 2-53
Filter Assy, Hyd, 10mic, 1-1
Filter Kit, Fuelock, Lpg, 1-1, 2-31, 2-37
Filter Wldt, Hppr (Replaced By 9003774), 2-81
Filter, Foam, Rbr, 1.20d, 1.0l, 3-23, 3-25
Filter, Fuel [Gm 1.6l/3.0l], 1-1, 2-41, 2-43
Filter, Fuellock, Lpg [Gm1.6L 2010], 2-39
Filter, Fuelock,Lpg[Gm1.6l 2010], 1-1
Filter, In-Line, Pf06/Pf06 080mesh 02.6l, 3-29, 3-39
Filter, In-Line, Pf06/Pf06, 80 Mesh, 3-19
Filter, Panl, Syn, 4.2 X 20.0 X 30.0, 1-1, 2-83
Filter, Soltn, 020mesh, Pm12 3.2d 08.0l, 3-5
Filter, Soltn, 20mesh, Pm12 3.1d 02.6l, 1-1, 2-114
Fitting Assy, Orifice, 0.070b, Pf04/Pf04, 3-19
Fitting Assy, Orifice, 0.093b, Pf04/Pf04, 3-19
Fitting Assy, Qdc, Pf04, 3-39
Fitting Kit [Epr], 2-37, 2-39
Fitting Kit, Hose, Garden, 3-3
Fitting, Adapter, Orifice, Pf06/Pm06, 2-25, 2-27, 2-29, 2-39
Fitting, Brs, Breather [02mp], 2-85
Fitting, Brs, E45, Pf02/Pm02, 2-23
Fitting, Brs, E90, Bm08/Pm04, 3-19
Fitting, Brs, E90, Cf03/Pf02, 3-21
Fitting, Brs, E90, Em05/Pm04, 2-41, 2-43
Fitting, Brs, E90, Em10/Pm06, 2-25, 2-27, 2-29, 2-32, 2-37, 2-39
Fitting, Brs, E90, Pf04/Pm04, 2-37, 2-41, 2-45
Fitting, Brs, E90, Pm02/Bm03, 2-85, 3-5
Fitting, Brs, Qdc, Bm12/Qf08, 3-3
Fitting, Brs, Qdc, Pf04, Lpg Fem, 2-45
Fitting, Brs, Qdc, Pf08 [Parker Bh3f], 3-3
Fitting, Brs, Snubber, Pm02/Pf02, 3-39
Fitting, Brs, Str, Bm03/Pm02, 2-85
Fitting, Brs, Str, Bm04/Pm02, 3-21
Fitting, Brs, Str, Bm05/Pm04, 2-41
Fitting, Brs, Str, Bm06/Pm05, 2-27, 2-37
Fitting, Brs, Str, Bm08/Pm04, 3-19
Fitting, Brs, Str, Em10/Pm06, 2-29, 2-39
Fitting, Brs, Str, Pf02/Pm04, 3-19
Fitting, Brs, Str, Pf02/Pm06, 3-39
Fitting, Brs, Str, Pf04/Pf04, Bh, 2-45
Fitting, Brs, Str, Pf04/Pm02, 2-25, 2-27, 2-32, 2-37
Fitting, Brs, Str, Pf06/Pf06 Bh, 3-61
Fitting, Brs, Str, Pf06/Pm04, 2-29, 2-39
Fitting, Brs, Str, Pf06/Pm12, 3-61
Fitting, Brs, Str, Pm04/Pm04, 2-41, 3-19
Fitting, Brs, Str, Pm08/Garden Hose, 3-61
Fitting, Brs, Tee, Pf04/Pf04/Pf04, 3-19
Fitting, Brs, Tee, Pm04/Pf04/Pf04, Run, 3-29
Fitting, Cap, 2-31
Fitting, Draincock, E90, .25npt, 2-25, 2-27, 2-32, 2-37, 2-61, 2-67
Fitting, E, Gr, 4-3
Fitting, E70, 2-31
Fitting, E90, M14 X .56, 2-23
Fitting, E90, 2-31, 2-35
Fitting, End, Hose, 2-23
Fitting, Fltr, Oil, 5-8
Fitting, Fuel [Mixer E100Lp 2010], 2-35
Fitting, Fuel, Str, 0.38-24 [07 Eng], 2-43
Fitting, Fuel, Str, 0.56-18 [07 Eng], 2-43
Fitting, Grease, Str Pm04 .47l, 2-79, 2-87, 2-89, 2-95, 2-103
Fitting, Grease, Str Pm04 .63l, 2-71
Fitting, Hose, Vacuum, .25, 2-31
Fitting, Hyd, Cap, Jf04, 2-145
Fitting, Hyd, Cap, Jf08, 2-145, 3-15
Fitting, Hyd, E45, Jf10/Jm10, 2-135
Fitting, Hyd, E45, Jm04/Om04, 3-15
Fitting, Hyd, E45, Jm04/Om06, 2-71, 2-79
Fitting, Hyd, E45, Jm06/Om04, 2-125
Fitting, Hyd, E45, Jm06/Om06, 2-71, 2-149
Fitting, Hyd, E45, Jm08/Om08, 2-125, 2-149, 2-151, 3-15
Fitting, Hyd, E45, Jm08/Om10, 2-143
Fitting, Hyd, E45, Jm10/Om12, 2-71
Fitting, Hyd, E45, Jm12/Om16, 2-147
Fitting, Hyd, E45, Jm20/Om20, 2-147
Fitting, Hyd, E90, Jf04/Jm04, 2-93, 2-149, 3-15
Fitting, Hyd, E90, Jf06/Jm06, 3-15
Fitting, Hyd, E90, Jf08/Jm08, 2-17
Fitting, Hyd, E90, Jm04/Om04, 2-87, 2-89, 2-99, 2-107, 2-111, 2-149, 2-151, 3-11
Fitting, Hyd, E90, Jm04/Om06, 2-79
Fitting, Hyd, E90, Jm04/Pm02, 2-147
Fitting, Hyd, E90, Jm06/Om04, 2-95, 3-11
Fitting, Hyd, E90, Jm06/Om06, L, 2-149
Fitting, Hyd, E90, Jm06/Om06, Long, 2-151
Fitting, Hyd, E90, Jm06/Om06, 2-17, 2-149, 2-151, 3-15
Fitting, Hyd, E90, Jm06/Om08, 2-143
Fitting, Hyd, E90, Jm08/Om08, L, 2-149
Fitting, Hyd, E90, Jm08/Om08, Long, 2-151
Fitting, Hyd, E90, Jm08/Om08, 2-91, 2-93, 2-127, 2-143, 2-149, 3-15
Fitting, Hyd, E90, Jm08/Om10, 3-7, 3-9
Fitting, Hyd, E90, Jm10/Om12, 2-143
Fitting, Hyd, E90, Jm12/Om12, L, 2-145
Fitting, Hyd, E90, Jm12/Om12, 2-145
Fitting, Hyd, E90, Om04/Qm04, 2-149, 2-151, 3-15
Fitting, Hyd, E90, Spcl, 2-37, 2-39
Fitting, Hyd, Plug, Om04, 2-151, 4-11, 4-17, 4-19
Fitting, Hyd, Plug, Om06, 2-147, 2-151
Fitting, Hyd, Plug, Om08, 4-7, 4-17
Fitting, Hyd, Plug, Om10, 2-147
Fitting, Hyd, Plug, Pm06, 2-29, 2-39
Fitting, Hyd, Rst, Jf04/Jm04, .028, 2-79
Fitting, Hyd, Rst, Spcl, 2-107, 2-111
Fitting, Hyd, Str, Jf04/Qm04, 2-149, 3-15
Fitting, Hyd, Str, Jf06/Jm04, 2-145
Fitting, Hyd, Str, Jm04/Om04, 2-91, 2-93, 2-149, 2-151, 3-15
Fitting, Hyd, Str, Jm04/Om06, 3-15
Fitting, Hyd, Str, Jm06/Om04, 2-127
Fitting, Hyd, Str, Jm06/Om06, L, 2-17
Fitting, Hyd, Str, Jm06/Om06, Long, 2-151, 3-17
Fitting, Hyd, Str, Jm06/Om06, 2-17, 2-147, 3-15, 3-17
Fitting, Hyd, Str, Jm08/Om06, 2-17
Fitting, Hyd, Str, Jm08/Om08, 2-127, 2-143, 2-147, 3-15
Fitting, Hyd, Str, Jm08/Om10, 3-7
Fitting, Hyd, Str, Jm10/Om10, Long, 2-151
Fitting, Hyd, Str, Jm10/Om10, 2-149
Fitting, Hyd, Str, Jm10/Om12, 2-71
Fitting, Hyd, Str, Jm20/Om16, 2-143
Fitting, Hyd, Str, Om04/Qm04, 2-149, 3-15
Fitting, Hyd, Str, Pf02/Pm04, 2-45
Fitting, Hyd, Tee, Jf06/Jm06/Jm06, Run, 2-127
Fitting, Hyd, Tee, Jm06/Jm06/Om06, Run, 2-149, 3-17
Fitting, Hyd, Tee, Jm08/Jm08/Om08, Br, 2-125, 2-149, 2-151
Fitting, Hyd, Tee, Pf04/Pf04/Pm04, Run, 2-45
Fitting, Nipple, .25mal, 2-37, 2-39
Fitting, Nipple, .25npt, Brs, 2-31
Fitting, Nyl, Qdc, E90, Bm08/ Qm10, 3-29, 3-39
Fitting, NylY, Qdc, E90, Bm06/ Qm10, 3-29
Fitting, Pipe, Bshg, M18 X 1.5, 2-23
Fitting, Pipe, E45, Spcl, 2-45
Fitting, Pipe, E90, Pf02/Pm02, 3-21
Fitting, Pipe, Plug, Metric, M18,Soc, 2-23, 2-57, 2-59
Fitting, Pipe, Plug, Pm02, Sq Head, 2-43
Fitting, Pipe, Plug, Pm08, Sq Head, 2-119
Fitting, Pipe, Plug, 2-23
Fitting, Plstc, Body, Spray, Pf04, 3-19
Fitting, Plstc, Cap, Pf12 Hex, 2-119
Fitting, Plstc, Cap, Spray, Pf04, 3-19
Fitting, Plstc, E90, Bm05/Bm05, Nyl, 3-39
Fitting, Plstc, E90, Bm06/Bm06, 3-5, 4-25
Fitting, Plstc, E90, Bm06/Pm04, Nyl, 3-29

Fitting, Plstc, E90, Bm06/Pm12, Nyl, 3-3
Fitting, Plstc, E90, Bm08/Bm08, 3-39
Fitting, Plstc, E90, Bm08/Pf08s, Swivel, 3-19, 3-61
Fitting, Plstc, E90, Bm08/Pm04, 3-39
Fitting, Plstc, E90, Bm08/Pm06, 3-39, 3-61
Fitting, Plstc, E90, Bm08/Pm12, Nyl, 3-19, 3-23, 3-25, 3-29, 3-39
Fitting, Plstc, E90, Bm10/Pm08, 3-3
Fitting, Plstc, E90, Bm10/Pm12, 3-3
Fitting, Plstc, E90, Bm12/Pf12, 3-5
Fitting, Plstc, E90, Bm12/Pm08, 3-3
Fitting, Plstc, E90, Bm12/Pm12, 3-3, 3-5, 3-19, 3-29, 3-39
Fitting, Plstc, E90, Pf Bm [Es Pump], 4-3
Fitting, Plstc, E90, Pf12/Pm12, 2-114
Fitting, Plstc, Pf12/Pf12, Bh, 2-114, 3-3
Fitting, Plstc, Pipe, Cap, Pf04, 3-21, 3-29, 4-25
Fitting, Plstc, Rst, .50od /.13id, 3-25
Fitting, Plstc, Str, Bm04, Cplg, Fem, 3-21, 3-29
Fitting, Plstc, Str, Bm04/Bm08, 3-39
Fitting, Plstc, Str, Bm04/Pm04, 3-39
Fitting, Plstc, Str, Bm05/Pm04, 3-39
Fitting, Plstc, Str, Bm06/Bm08, 3-43
Fitting, Plstc, Str, Bm06/Pm04, 3-29, 4-25
Fitting, Plstc, Str, Bm06/Pm06, 3-29
Fitting, Plstc, Str, Bm08/Pf08s, Swivel, 3-61
Fitting, Plstc, Str, Bm08/Pm06, 3-19
Fitting, Plstc, Str, Bm08/Pm12, 3-23, 3-25
Fitting, Plstc, Str, Bm10/Bm10, 2-47, 2-51
Fitting, Plstc, Str, Bm12/Bm12, 2-119
Fitting, Plstc, Str, Bm12/Pm08, Nyl, 3-3, 4-3
Fitting, Plstc, Str, Bm12/Pm12, 2-119
Fitting, Plstc, Str, Pf06/Qm10, Pvc, 3-39
Fitting, Plstc, Str, Pm02/Bm05, 4-25
Fitting, Plstc, Str, Pm04, Cplg, Mal, 3-21, 3-29
Fitting, Plstc, Str, Pm04/Pm06, Nyl, 3-39
Fitting, Plstc, Str, Pm08/Pm08, 3-3
Fitting, Plstc, Str, Pm12/Pm12 1.60l, 3-3, 3-19, 3-29, 3-39
Fitting, Plstc, Tee, Bm04/Bm04/Bm04, 3-29
Fitting, Plstc, Tee, Bm04/Bm08/Bm08, Br, 3-19
Fitting, Plstc, Tee, Bm06/Pm02/Bm06, 4-25
Fitting, Plstc, Tee, Bm08/Bm08/Bm08, 3-19
Fitting, Plstc, Tee, Bm08/Bm12/Bm12, Br, 3-23, 3-25, 3-31, 3-41, 3-43, 3-61
Fitting, Plstc, Tee, Bm10/Bm10/Bm10, 2-29, 2-39
Fitting, Plstc, Tee, Bm12/Bm12/Bm12, 2-119, 3-13
Fitting, Plstc, Tee, Pf08/Pf08/Pf08, 3-3
Fitting, Plstc, Tee, Pf12/Pf12/Pf12, 3-3, 3-19, 3-29, 3-39
Fitting, Plstc, Y, Bm08/Bm08/Bm08, Nyl, 3-25, 3-29, 3-33, 3-43
Fitting, Plug, M16, Intake Manifold, 2-27, 2-29, 2-35
Fitting, Plug, Org, #6, Valve [Cec], 4-11, 4-13, 4-15, 4-17, 4-19
Fitting, Plug, 2-23
Fitting, Str, .19brb X .12mpt, 2-25
Fitting, Str, E90, .25npt, 2-31
Fitting, Str, 2-31
Fitting, Vacuum [M16-15-6h], 2-25, 2-27, 2-29, 2-35
Flange Mounting, 4-8
Flange, Motor, Hyd [En], 4-9
Flap, Battery, 2-13
Flapper, Valve, Pump, Water, 4-3
Flywheel, 5-5
Frame Wldt, Lift, Hppr, 2-79
Frame Wldt, Main, Replmt [m20 & T20], 2-7
Frame Wldt, Sqge, Lh, 2-109
Frame Wldt, Sqge, Rh, 2-105
Frame Wldt, Sqge, Side Brush, 3-7
Fuelline, .31d Str/Str, Plstc, 2-41, 2-43
Fuelline, .31d Str/Str,Plstc[M20/T20 07], 2-43
Fuse, 015a, 2-69
Fuse, 10 Amp, 2-199
Fuse, 15 Amp, [Min-15], 2-199
Fuse, 20 Amp, [Min-20], 2-199
Fuse, 5 Amp, [Min-5], 2-199
Fuse, 50amp, 2-199
Fuse, 60 Amp, 2-199

G

Gasket Kit, Repair, Gas [Gm1.6l 2007], 2-27, 2-29
Gasket Kit, Repair, Lpg [Gm1.6l 2007], 2-35
Gasket, .25 1.88d 1.0id [Poron], 4-3
Gasket, 3.23id 3.63od .16th, Ure, 2-121
Gasket, 4.05id 5.29od .19 [Buna], 2-121, 4-3
Gasket, Body, Throttle [1.6l], 2-27, 2-29
Gasket, Cover, Fuse Block, 2-69
Gasket, Cover, Hsng, Camshaft, 5-3
Gasket, Cover, Recvy Tank, 2-121
Gasket, Exhaust, 2hole, 3.4bc, 2-57, 2-59
Gasket, Flng, Pipe, Exhaust, 2-57, 2-59
Gasket, Head, Cyl, 5-3
Gasket, Hppr, Transition, 2-127
Gasket, Manifold, Exhaust, 5-9
Gasket, Manifold, Intake, 2-25, 2-27, 2-29, 2-31, 5-9
Gasket, Pan, Oil, 5-8
Gasket, Plt, Hose, Vacuum, 2-125
Gasket, Plug, Relief Valve,Oil Press, 2-23, 5-7
Gasket, Pump, Oil, 5-7
Gasket, Sender, Fuel, 2-43
Gasket, Sqge, 1-1, 2-101
Gasket, Tube [Pcv], 5-3
Gasket, 2-31
Gasspring, 180lb, 03.0strk, 2-15
Gauge, Sensing, Level, 2-147
Gear, Drive, Oil Pump, 5-7
Gear, Ring, Drive, Oil Pump, 5-7
Geroler, Motor, Hyd, 4-5
Gerotor Set [Cl], 4-9
Gerotor Set, 4-8
Grill Wldt, Front, 2-19
Grill, Eng, 2-21
Grill, Side, 2-15
Grip, Handle, 2-117, 2-123
Grommet, Blind, 4-25
Grommet, Pye, 0.37id, F/1.5h, .13 Matl, 3-5
Grommet, Rbr, 0.20id, F/0.4h, .12 Matl, 2-25, 2-31
Grommet, Rbr, 0.50id, F/0.8h, .12 Matl, 3-52, 3-53, 3-55
Grommet, Rbr, 0.62id, F/0.9h, .06 Matl, 2-85, 3-37
Grommet, Rbr, 0.62id, F/0.9h, .12 Matl, 3-5
Grommet, Rbr, 1.06id, F/1.4h, .19 Matl, 2-85
Grommet, Rbr, 1.50id, F/1.8h, .19 Matl, 2-85
Grommet, Rbr, 2.13id, F/2.5h, .12 Matl, 3-19, 3-29
Guard Kit, Sqge, Ci [M20], 3-65
Guard Wldt, Sqge, 3-65
Guard Wldt, Brush, Side, 3-13
Guard Wldt, Pntd [M20/T20], 3-65
Guard Wldt, Sqge [M20/T20 Lh, M30 Rh], 3-65
Guard Wldt, Sqge [M20/T20 Rh, M30 Lh], 3-65
Guard Wldt, Sqge [M20/T20/M30], 3-65
Guard Wldt, Top, Ohg, 3-55

H

Handle Wldt, Drain, 2-121
Handle, Valve, Pinch, Lh, 2-123
Handle, Valve, Pinch, Rh, 2-117
Harness [Fast, M20 And T20], 3-27
Harness, Adapter, Eng [2007], 2-199
Harness, Eng [1.6l, Gm, E-cntrl], 2-199
Harness, Headlight [M20 And T20], 2-199
Harness, Hppr [M20], 2-199
Harness, Hppr [M20/M30], 2-199
Harness, Hppr, Cover [M20], 2-199
Harness, Injector, Gas [1.6l,Gm,E-cntrl], 2-199
Harness, Injector, Lpg [1.6l,Gm,E-cntrl], 2-199
Harness, Main [M20], 2-199
Harness, Manifold, Gas, 2-43
Harness, Spray, Nozzle, 3-61
Harness, Warning / Backup [M20 & T20], 3-47, 3-49, 3-51
Harness, Warning / Ohg [M20], 3-52, 3-53
Harness, Wire [Ec-H2o], 3-46

Harness, Wire [Fast Gen 2], 3-35
Harness, Wire, Eng, Gas [Gm 1.6L 10], 2-199
Harness, Wire, Eng, Gas [Gm 1.6L], 2-199
Harness, Wire, Eng, Lpg [Gm 1.6L 10], 2-199
Harness, Wire, Eng, Lpg [Gm 1.6l], 2-199
Harness, Wire, Interface [Ec-H2o], 3-46
Head, Cyl, 5-3
Headlight, 12vdc, 27watt, 2.1a, Oval (Rpl by 1060942), 2-7
Headlight, 12Vdc, Oval, Halogen, 2-7
Hinge Wldt, Shrd, Lh, 2-21
Hinge Wldt, Shrd, Rh, 2-15
Hinge, .38pin .11 3.5w 06.0l 6/0.38sl, 2-19
Hinge, .50pin .19 4.0w 06.0l 3/0.44sl, 2-107, 2-111
Hopper, Debris, Rm-Hg, Trimmed, 2-81
Horn, 12vdc, Dba [Wolo], 2-69
Hose [Epr To Manifold], 2-37, 2-39
Hose [Mixer To Epr], 2-37
Hose [Pcv], 5-3
Hose Assy, Sqge, 2-121
Hose Assy, W/1cuff, 1.0d 09l 1.0/, 2-81
Hose Assy, W/2cuff, 1.5d 084l [Vacwand], 3-59
Hose Assy, W/2cuff, 1.5d 84l [Vacwand], 3-57
Hose, 170mm [Ftv-Ptv], 2-31
Hose, 355mm [Fl-Vrp], 2-31
Hose, 9.5mm X 290mm [Pcv], 2-31
Hose, 9.5mm X 450mm [Pcv], 2-25
Hose, Afmkt, Coolant Recvy, 05ft, 2-61, 2-67
Hose, Afmkt, Pvc, Brd 0.38id 02ft, 3-5
Hose, Afmkt, Pvc, Brd 0.50id 02ft, 3-23
Hose, Afmkt, Pvc, Brd 0.50id 03ft, 3-19
Hose, Afmkt, Pvc, Brd 0.50id 08ft, 3-19, 3-25
Hose, Afmkt, Pvc, Brd 0.62id 01ft, 3-5
Hose, Afmkt, Pvc, Brd 0.75id 02ft, 3-5
Hose, Afmkt, Pvc, Brd 0.75id 08ft, 2-119, 3-3, 3-13
Hose, Afmkt, PVC, Brd, 0.31Id, 03Ft, Clr, 3-39, 4-25
Hose, Afmkt, Pvc, Brd, 0.38id, 01ft, Clr, 4-25
Hose, Afmkt, Pvc, Brd, 0.38id, 02ft, Clr, 3-43, 4-25
Hose, Afmkt, Pvc, Brd, 0.38id, 03ft, Clr, 3-29
Hose, Afmkt, Pvc, Brd, 0.50Id, 01Ft, Clr, 3-29
Hose, Afmkt, Pvc, Brd, 0.50id, 01ft, Clr, 3-39
Hose, Afmkt, Pvc, Brd, 0.50id, 02ft, Clr, 3-39
Hose, Afmkt, Pvc, Brd, 0.50id, 08ft, Clr, 3-31, 3-33, 3-43
Hose, Afmkt, Pvc, Brd, 0.50id, 12ft, Clr, 3-41
Hose, Afmkt, Pvc, Brd, 0.75id, 08ft, Clr, 3-31, 3-41, 3-61
Hose, Afmkt, Pvc, Clr 0.25id 03ft, 3-21
Hose, Afmkt, Pvc, Clr 0.50id 08ft, 3-25
Hose, Afmkt, Pvc, Clr, 0.25id, 02ft, 3-29
Hose, Afmkt, Pvc, Clr, 0.25id, 03ft, 3-39
Hose, Afmkt, Pvc, Clr, 0.38id, 01ft, 3-29
Hose, Afmkt, Pvc, Clr, 0.38id, 03ft, 3-29
Hose, Afmkt, Pvc, Clr, 0.50id, 08ft, 3-33
Hose, Afmkt, Pvc, Wir, 0.50id, 03ft, Clr, 3-29
Hose, Afmkt, Rbr, Heater, 0.62id, 02ft, 2-29
Hose, Afmkt, Rbr, Heater, 0.62id, 08ft, 2-39
Hose, Afmkt, Vacuum, 0.16id 01ft, 3-5
Hose, Afmkt, Vacuum, 0.16id, 03ft, 2-85
Hose, Air-Intk, Flex 4.00id 18.0l, 2-125
Hose, Balancing, Press, 045mm, 2-31
Hose, Balancing, Press, 680mm, 2-31
Hose, Coolant, Mold, 1.25id To 1.62id, 2-67
Hose, Drain, 3.00id X 48.0l, 2-117, 2-123
Hose, Drain, Eng Oil, 2-23
Hose, Flex, Vacuum, 3.5d 32.0l, 2-127
Hose, Fuel [Mixer To Epr, 22.5"L], 2-39
Hose, Fuel, 0.31id [Evap Emission 07], 2-43
Hose, Fuel, .19, 2-25
Hose, Fuel, 0.18id, 29.0l, 2-67
Hose, Fuel, 0.31id 12.0l, 2-41
Hose, Fuel, 0.31id 24.0l, 2-41
Hose, Fuel, 0.50id 21.0l, 2-41
Hose, Fuel, 0.50id, 21.0l, 2-43
Hose, Heater, 0.38ID, 2-27
Hose, Heater, 0.38id, 2-37
Hose, Heater, 0.62id, 024.0l, 2-29
Hose, Heater, 0.62id, 038.0l, 2-39
Hose, Heater, E90, 0.62id 07.0 2.0, 2-47, 2-51
Hose, Heater, E90, 0.62id, 24.0 4.0, 3-33, 3-43
Hose, Heater, 2-25, 2-27
Hose, Hyd, 26.0l, 2-23
Hose, Hyd, Med04, Jf04e90/Jf04str, 016.0, 2-139
Hose, Hyd, Med06, Jf06e90/Jf06str, 042.0, 2-137
Hose, Hyd, Med06, Jf06e90l/Jf06str,038.0, 3-17
Hose, Hyd, Med06, Jf06str/Jf06str, 018.0, 2-137
Hose, Hyd, Med06, Jf06str/Jf06str, 022.0, 2-137
Hose, Hyd, Med06, Jf06Str/Jf06Str, 042.0, 2-137
Hose, Hyd, Med08, Jf08e90/Jf08str, 031.0, 2-137
Hose, Hyd, Med08, Jf08str /Jf08e45, 21.0, 2-137
Hose, Hyd, Med08, Jf08str/Jf08str, 022.0, 2-139
Hose, Hyd, Med10, Jf10str/Jf10str, 41.0, 2-137
Hose, Hyd, Med10, Jf10Str/Jf10Str, 036.0, 2-137
Hose, Hyd, Med12, Jf12e90/Jf12str, 50.0, 2-137
Hose, Hyd, Med12, Jf12e90/Jf12str, 029.0, 2-137
Hose, Hyd, Med12, Jf12str/Jf12str, 052.0, 2-137
Hose, Hyd, Spcl, Jf04str/Jf04str, 115.0, 2-139
Hose, Hyd, Spcl, Jf04str/Jf04str, 121.0, 2-139, 2-141
Hose, Hyd, Spcl, Jf04str/Jf04str, 127.0, 2-139
Hose, Hyd, Spcl, Jf04str/Jf04str, 133.0, 2-139
Hose, Hyd, Spcl, Jf04str/Jf06str, 125.0, 2-141
Hose, Hyd, Spcl, Jf10e45/Jf10str, 58.0 (Replaced by 1039148), 2-135
Hose, Hyd, Spcl, Jf10e90/Jf10str, 63.0, 2-135
Hose, Hyd, Spcl, Jf10str/Jf10str, 56.5, 2-135
Hose, Hyd, Suc20, Jf20str /Jf20e90, 29.0, 2-137
Hose, Hyd, Tc 06, Jf06str /Jf06e45, 56.0, 2-139
Hose, Hyd, Tc04, Jf04e45/Qm06, 026.0, 2-141
Hose, Hyd, Tc04, Jf04e45/Qm06, 028.0, 2-141
Hose, Hyd, Tc04, Jf04e90/Jf04str, 020.0, 2-139
Hose, Hyd, Tc04, Jf04str /Jf04e90, 70.0, 2-139
Hose, Hyd, Tc04, Jf04str /Jf04e90, 88.0, 2-139
Hose, Hyd, Tc04, Jf04str /Jf04str, 20.0, 3-17
Hose, Hyd, Tc04, Jf04str /Jf04str, 39.0, 3-17
Hose, Hyd, Tc04, Jf04str/Jf04str, 096.0, 2-139
Hose, Hyd, Tc06, Jf06e90/Jf06str, 040.0, 2-135
Hose, Hyd, Tc06, Jf06e90/Jf06str, 104.0, 2-135
Hose, Hyd, Tc06, Jf06str /Jf06e45, 54.0, 2-139
Hose, Hyd, Tc06, Jf06str /Jf06e90, 74.0, 3-17
Hose, Hyd, Tc06, Jf06str /Jf06str, 23.0, 3-17
Hose, Hyd, Tc06, Jf06str/Jf06str, 033.0, 3-17
Hose, Hyd, Tc06, Jf06str/Jf06str, 054.0, 2-139
Hose, Hyd, Tc06, Jf06Str/Jf06Str, 062.0, 3-17
Hose, Hyd, Tc08, Jf08E45/Jf08Str, 026.0, 2-137

Hose, Hyd, Tc08, Jf08e45/Jf08str, 26.0, 2-137
Hose, Hyd, Tc08, Jf08e45/Jf08str, 96.0, 2-135
Hose, Hyd, Tc08, Jf08e90/Jf08str, 024.0, 2-137
Hose, Hyd, Tc08, Jf08E90/Jf08Str, 029.0, 2-137
Hose, Hyd, Tc08, Jf08e90/Jf08str, 034.0, 3-17
Hose, Hyd, Tc08, Jf08e90/Jf08str, 046.0, 2-137
Hose, Hyd, Tc08, Jf08e90/Jf08str, 056.0, 3-17
Hose, Hyd, Tc08, Jf08e90/Jf08str, 13.0, 2-139
Hose, Hyd, Tc08, Jf08str/Jf08e90, 012.0, 3-15
Hose, Hyd, Tc08, Jf08str/Jf08e90, 031.0, 2-137
Hose, Hyd, Tc08, Jf08Str/Jf08Str, 021.0, 2-137
Hose, Hyd, Tc08, Jf08str/Jf08str, 024.0, 2-137
Hose, Hyd, Tc08, Jf08str/Jf08str, 031.0, 2-137
Hose, Hyd, Tc08, Jf08str/Jf08str, 034.0, 3-17
Hose, Hyd, Tc08, Jf08str/Jf08str, 056.0, 3-17
Hose, Hyd, Tc08, Jf08str/Jf08str, 21.0, 2-137
Hose, Hyd, Tc08, Jf08str/Jf08str, 48.0, 2-139
Hose, Hyd, Tc12, Jf12e90/Jf12str, 044.0, 2-137
Hose, Hyd, Tco4, Jf04Str/Qm06, 028.0, 2-141
Hose, Hyd,Med04, Jf04str/Jf04str, 066.0, 2-135
Hose, Hyd,Tc 04, Jf04str /Jf04e45 , 35.0, 2-141
Hose, Intake, Mold, 2.00id [Epdm], 2-47, 2-49, 2-51, 2-53
Hose, Intake, Mold, 2.00id, Gas [Epdm], 2-47
Hose, Intake, Mold, 2.00id, Lpg [Epdm], 2-51
Hose, Intake, Mold, 2.0id [Epdm M20/T20], 2-49, 2-53
Hose, Intake, Mold, 2.0id, Gas, 2-49
Hose, Intake, Mold, 2.0id, Lpg [Gm 2010], 2-53
Hose, Intake, Mold, 2.0id, Lpg, 2-53
Hose, Lpg, Med05, Pm04str/Sm04str, 14.0l, 2-45
Hose, Lpg, Med05, Pm04str/Sm04str, 55.0l, 2-45
Hose, Mold, .62 To .75 (Cut in 2), 2-37
Hose, Mold, .62 To .75, 2-31
Hose, Pvc, Brd, 0.62id 0.88od 09.00l, 3-3
Hose, Pvc, Clr, 0.38id 0.56od 22.00l, 2-25, 2-32, 2-61
Hose, Pvc, Clr, 0.38id 0.56od 48.00l, 3-3, 3-5
Hose, Pvc, Clr, 0.38id 0.56od 022.0l, 2-27, 2-37, 2-67
Hose, Pvc, Clr, 0.50id 0.69od 26.00l, 3-13
Hose, Pvc, Clr, 0.50id 0.69od 30.00l, 2-69
Hose, Radiator, Lower, Mold, 2-61, 2-67
Hose, Radiator, Mold, .75Id X .62Id (Cut in two), 2-29
Hose, Radiator, Upper, Mold, 2-61
Hose, Rbr, 2.00id 2.50od 05.0l, 2-47, 2-51
Hose, Rbr, E90 1.25id 1.25id 04.2 03.1, 2-61
Hose, Rbr, E90, 1.25id 1.25id 04.2 03.1, 2-67
Hose, Supply, Gas, .25id, 2-37, 2-39
Hose, Vacuum, 0.22id X 03.0l, 2-27, 2-29, 2-35
Hose, Vacuum, 19.0l, 2-101
Hose, Valve, Press Trim, 350mm, 2-31
Hose, Vent, E90, 0.62id[Gm1.6l 2007], 2-49, 2-53
Hose, Water, Coil, 3-61
Housing Assy, Vacfan, Scrbr, 2-125
Housing Assy, Vacfan, Swpr, 2-127
Housing Kit, Pump, Water, 4-3
Housing Wldt, Brush, Drive, 2-91, 2-93
Housing Wldt, Swp, Scb, 2-95
Housing Wldt, Vacfan, Front [528], 2-125
Housing, Bottom, 4-25
Housing, Brg, Motor, Hyd, 4-5
Housing, Camshaft, 5-3, 5-11
Housing, Cplg, Qf / Pm08, 3-39
Housing, Motor, Hyd [En], 4-9
Housing, Pump, 2-23
Housing, Sppt, Rear Wheel, 2-71
Housing, Throttle, 40mm [Bosch], 2-27, 2-29, 2-31, 2-35
Housing, Valve, 4-5
Housing, 4-7
Housingl, 4-8
Hsg & Switch Kit, Pump, Repair,, 4-23
Hub Assy, Wheel, 5 Bolt 4.50bc Taper B, 2-71
Hub, Drive, Brush, Disk, 1.00b [6t], 3-7, 3-9
Hub, Drive, Brush, Disk, 3hole 5.8bc[6t], 2-5
Hub, Drive, Brush, Disk, 3hole 5.8bc, 2-5

I

Idler Assy, Brush, Replmt [M20/T20, M30], 2-91, 2-93
Impeller, 9.00d X 1.40w X 0.376b, 2-127
Impeller, 9.5” Dia, 18 Blade (Machined), 2-125
Indicator, Press, 60psi, 2-147
Injector Kit, Fuel, Gas, 2-25
Insert, Cap, Mount, Es Pump, 4-3
Insert, Cplg, Qm, Bm08, 3-39
Insert, Plt, Cam, Pump, Hyd, 4-7
Instr. Repair Info, Motor, 4-8
Instr, Maint, Wall Chart [M20], 3-67
Instr, Motor, Hyd, Repair [En], 4-9
Instr, Repair, Motor, Hyd, Gear, 4-5
Instr, Repair, Pump, 4-7
Instr, Seal Kit, Motor, 4-10
Instr, Valve, Steering, Repair, 4-21
Insulation, Acstc, Rnd, 0.8, 02.5d 0.5h, 2-17
Insulation, Flame-Retardant, 0.5, 2-21, 2-41, 2-43
Insulation, Flame-Retardant, 0.50, 2-125
Insulation, Flame-Retardant, 0.75-0.88, 2-11, 2-125
Insulation, Flame-retardant, 0.75-0.88, 2-11, 2-15
Insulation, Flame-Retardant, 1.0, 2-15
Insulation, Shrd, Eng, Gusset, 2-21
Insulation, Thermal, Hydraulic Blanket, 2-147
Insulation, 3-55
Isolator [Epr], 2-37, 2-39
Isolator, Box, Relay, 2-27, 2-29, 2-35
Isolator, Mtg, Vaporizer, Rbr, 2-31
Isolator, Rbr, 2-57, 2-59
Isolator, Vib, .50d, 2-23
Isolator, Vib, Bshg, 1.1d 0.6l .4b 0.78h, 2-61, 2-65, 2-125, 2-127

K

Key, Ignition [Set Of 2], 1-1, 2-13
Key, Motor, Hyd, 4-5
Key, Shaft, Pump, Hyd, 4-7
Key, Sq, 0.12 X 0.12, 0.50l, 2-55
Key, Sq, 0.12 X 0.12, 0.75l, 4-10
Key, Sq, 0.12 X 0.12, 1.00l (Included With Motor), 2-125
Key, Sq, 0.25 X 0.25, 1.25l, 2-91, 2-93
Key, Valve Stem, 5-3
Key, Woodruff, 0.25 1.00 [Asa#0808], 4-9
Key-Wdruff 0.25 1.00, 4-8
Kit, Bellows, Pump, Detgt, 4-22
Kit, Brush, Motor, Ele, 4-3
Kit, Seal, Motor, Hyd, Gear[Barns], 2-125, 4-10
Kit, Seal, Motor, Hyd, 4-5
Kit, Seal, Valve, Hyd [Cec], 4-10
Kit, Valve, Check, Pump, Water, 4-3
Knob Assy, Star, 1.12d 3ear M10, 2-103
Knob, Star, 2.80d 4ear 1.1l .31-18 Pyp, 2-101
Knob, Tee, 2.5x1.0 1.1l 0.38-16 Plstc, 2-17

L

Label [User, Attention, ec-H2O], 2-201
Label Kit, Panel, Replmt [M20], 2-13
Label Kit, Panel, Replmt [M20/M30 ec-H20 only], 2-13
Label Set, Brush Indicator & Removal, 2-201

Label Set, Hi Temp, 2-201
Label Set, Info/Hzrd, Swpr / Scrbr, Tj (Japan Only), 2-201
Label Set, Info/Hzrd, Swpr / Scrbr, 2-201
Label, Caution [Apply Parking Brake] (Japan Only), 2-201
Label, Caution [Apply Parking Brake], 2-201
Label, Clr [ec-H2O], 2-201
Label, Model, Bl-Gr [M20], 2-201
Label, Off-White [Fast] (Option), 2-201
Label, Off-White, Es (Option), 2-201
Label, Switch, Rocker [T20], 2-13
Label, Tl [ec-H2O], 2-201
Lamp Strobe, Amb [12-48 Vdc], 3-51, 3-53
Lamp, 12vdc [Speaker], 2-7
Lamp, Bulb, Flsh, 3-49, 3-52
Lamp, Bulb, Strobe, 3-51, 3-53
Lamp, Flasher, Amb [12-48 Vdc], 3-49, 3-52
Lamp, Halogen [Speaker], 2-7
Latch Assy, Mtg, Tank, Lpg, W/Nut, 2-45
Latch, Cover, 2-114
Latch, Door [Southco 91-562-07], 2-21, 2-105, 2-109
Latch, Hook, 2-107, 2-111
Latch, 2-15, 2-61, 2-83, 2-85, 2-91, 2-93, 2-113, 2-114, 3-63
Lens, Blue, Option, F/ Revl / Flsh Light, 3-49, 3-51, 3-52, 3-53
Lens, Lamp, Amb, Strobe/Flasher, 3-49, 3-51, 3-52, 3-53
Lens, Red, Option, F/ Revl / Flsh Light, 3-49, 3-51, 3-52, 3-53
Light Kit, Flsh, Ci [M20 And T20], 3-49
Light Kit, Flsh, W/Ohg, Ci[M20 And T20], 3-52
Light Kit, Revl, Ci [M20 And T20], 3-51
Light Kit, Revl, W/Ohg, Ci [M20 And T20], 3-53
Light, Led, .312D, 2 Volt [Tri-Color] (ec-H20 only), 2-13
Light, Panl, 14vdc, , 1.1 X 1.0, 2-13
Light, Tail, 12vdc, 2-85
Link Assy, Rod-End, M12, 2-99
Lock, Secondary, 2cav, Mp280 Sealed, 4-23

M

Magnet, Drive Brush, 2-45
Maint Kit, 400hr [M20/T20/M30 Lpg 2010], 1-1
Maint Kit, 800hr [M20/T20/M30 Lpg 2010], 1-1
Maint Kit, Gas, 400hr[M20/T20], 1-1
Maint Kit, Gas, 800hr[M20/T20], 1-1
Maint Kit, Lpg, 400hr[M20/T20], 1-1
Maint Kit, Lpg, 800hr[M20/T20], 1-1
Manifold, Bar, Spray, 37.5inch, 2-119
Manifold, Exhaust, 5-9
Manifold, Gas, Relief, Valve, 2-43
Manifold, Intake [1.6l], 2-25, 2-27, 2-29, 2-31, 2-35
Manifold, Water, 3-39
Manual, Eng, Cd-Rom [Tier Ii,Gm1.6l], 3-67
Manual, Oprtr [M20 Gas/Lpg En], 3-67
Manual, Oprtr [M20 Gas/Lpg, Es, Na], 3-67
Manual, Oprtr [M20 Gas/Lpg, Fr, Na], 3-67
Manual, Parts [M20 Gas/Lpg En], 3-67
Manual, Service [M20 En], 3-67
Manual, Service, Eng [Gm1.6l], 3-67
Manual, Service, Eng[Gm1.6l Em Cert], 3-67
Mat, Floor, 2-9
Media, Cd-Rom, Training [ec-H2O Tennant], 3-67
Mirror, Convex, 0.50D, 3-55
Mixer [E100lp Gm1.6l 2010], 2-35
Mixer, Lpg [Gm 1.6l], 2-31
Mixer, W/70deg Ftg, 2-35
Module Kit, Replmt [Ec-H20] (See Breakdowns), 3-37
Module Kit, Replmt [Ec-H20], 4-25
Module, Ecu, Gas [Gm 1.6l], 2-25
Module, Ecu, Gas [Gm1.6l 2010], 2-29
Module, Ecu, Gas [Gm1.6l 2700], 2-27
Module, Ecu, Lpg [Gm 1.6l], 2-31
Module, Ecu, Lpg [Gm1.6l 2010], 2-35
Module, Ecu, Lpg [Gm1.6l 2700], 2-35
Molding, Afmkt, Trim, Pvc, .08 .11, 01Ft, 3-37
Molding, Afmkt, Trim, Pvc, .08 .11, 1ft, 2-9
Molding, Trim, Pvc, .08-.11 13.2l, 2-43
Molding, Trim, Pvc,.18-.31 07.5l, 2-85
Motor Kit, Pump, Repair,, 4-23
Motor Kit, Replmt [M20&T20], 2-125
Motor, Ele [12vdc, Shaker], 2-83
Motor, Ele 12Vdc, Shakr, 2-83
Motor, Ele, 12vdc, Pump, Water, 4-3
Motor, Ele, Gear, 14vdc, Pump, Detgt, 4-22
Motor, Hyd Gear In 4.5 B 1500, 4-8
Motor, Hyd, Gear, [Ex] .194 R 3000 (See Breakdowns), 2-127
Motor, Hyd, Gear, [Int], 19.0 X 3000, 4-5
Motor, Hyd, Gear, Ext 0.19 Rh 3000, 4-10
Motor, Hyd, Gear, Int 04.5 Bi-Dir 1500 (See Breakdowns), 2-91, 2-93
Motor, Hyd, Gear, Int 08.9 Bi-Dir 2500 (See Breakdown), 3-7, 3-9
Motor, Hyd, Gear, Int 08.9 Bi-Dir 2500, 4-9
Motor, Hyd, Gear, Int 19.0 Bi-Dir 3000 (See Breakdowns), 2-71
Mount Wldt, Eng, Gas/Lpg, 2-23
Mount Wldt, Valve, Pinch, Lh, 2-123
Mount Wldt, Valve, Pinch, Rh, 2-117
Muffler, Catalytic [Gm 1.6], 2-57
Muffler, Catalytic [Gm 1.6l 2007], 2-59
Muffler, Catalytic [Gm 1.6l 2010], 2-59
Muffler, Short [Non-Catalytic Gm1.6/3.0], 2-57
Muffler, Vacfan, 4.0id, 2-127

N

Nipple, Hose, 3-61
Nozzle Kit, Spray, Ci, 3-61
Nozzle, Spray, Gun, 3-61
Nozzle, Wand, Plstc, 14.0l, 3-59
Nozzle, Wand, Plstc, 14.0lg, 3-57
Nozzle, 3-61
Nut, Coil, F/#8, 4-11, 4-13, 4-17
Nut, Coil, Nyl Patch, 4-15, 4-19
Nut, Flng, M05-0.8 [Gm1.6L Lp 2010], 2-35
Nut, Ftg, Hyd, 0.56-18, 2-145
Nut, Hex, Flng, M5 X 0.8, 2-79
Nut, Hex, Flng, M6 X 1.00, 2-65
Nut, Hex, Flng, M8 X 1.25, 2-37, 2-39, 2-105, 2-109, 2-145
Nut, Hex, Jam, .31-24, 2-75
Nut, Hex, Jam, .50-20, Lh, 2-95
Nut, Hex, Jam, .50-20, 2-95, 3-11
Nut, Hex, Jam, M10 X 1.5, Ss, 2-45, 2-55
Nut, Hex, Jam, M20 X 1.5, 2-17
Nut, Hex, Lock, .25-20, Nl, Ss, 2-77
Nut, Hex, Lock, .25-20, Nl, 2-41, 2-43, 2-125
Nut, Hex, Lock, .31-18, Nl, Thin, 2-15
Nut, Hex, Lock, .31-18, Nl, 2-15, 2-55
Nut, Hex, Lock, .31-24, Nl, Thin, 2-127
Nut, Hex, Lock, .38-16, Nl, Ss, 2-45, 3-11
Nut, Hex, Lock, .38-16, Nl, Thin, 2-45, 2-77, 2-125, 2-127
Nut, Hex, Lock, .50-13, Nl, Ss, 2-103
Nut, Hex, Lock, .50-13, Nl, Thin, 2-95
Nut, Hex, Lock, .50-20, Nl, Thin, 2-95
Nut, Hex, Lock, .75-10, Nl, 2-71
Nut, Hex, Lock, #08-32, Nl, 2-13
Nut, Hex, Lock, M10 X 1.5, Nl, Ss, 2-81, 2-89, 2-99, 2-103
Nut, Hex, Lock, M10 X 1.5, Nl, 2-45, 2-61, 2-65, 2-127, 2-145, 3-55, 3-65
Nut, Hex, Lock, M12 X 1.75, Nl, Ss, 2-95, 2-99
Nut, Hex, Lock, M12 X 1.75,Nl, 2-23, 2-73
Nut, Hex, Lock, M4 X 0.7, Nl, Ss, 2-21, 2-77, 2-105, 2-109, 3-3
Nut, Hex, Lock, M4 X 0.7, Nl, 2-15, 2-21, 2-62, 3-21
Nut, Hex, Lock, M4 X 0.70, Nl, Ss, 3-37
Nut, Hex, Lock, M5 X 0.8, Nl, Ss, 2-91, 2-93, 2-119, 3-13, 3-19, 3-25
Nut, Hex, Lock, M5 X 0.8, Nl, 2-15, 2-25, 2-31, 2-69
Nut, Hex, Lock, M5 X 0.80, Nl, Ss, 3-33, 3-43, 3-47, 3-49, 3-51, 3-52, 3-53, 3-63
Nut, Hex, Lock, M5 X 0.80, Nl, 3-37, 3-61
Nut, Hex, Lock, M6 X 1.0, Nl, 2-15, 2-17, 2-19, 2-25, 2-31, 2-47, 2-51, 2-61, 2-69, 2-75
Nut, Hex, Lock, M6 X 1.0, Ss, Nl, 2-13, 2-57, 2-83, 2-87, 2-89, 2-97, 2-99, 2-119, 2-121
Nut, Hex, Lock, M6 X 1.00, Nl, Ss, 3-63

Nut, Hex, Lock, M6 X 1.00, Nl, 2-9, 2-49, 2-53, 2-65
Nut, Hex, Lock, M6 X 1.00, Ss, Nl, 2-121
Nut, Hex, Lock, M8 X 1.25, Nl, Ss, 2-57, 2-59, 2-61, 2-67, 2-77, 2-81, 2-83, 2-87, 2-89, 2-91, 2-93, 2-97, 2-99, 2-101, 2-103, 2-105, 2-107, 2-109, 2-111, 2-113, 2-117, 2-123, 3-7, 3-13, 3-15
Nut, Hex, Lock, M8 X 1.25, Nl, 2-7, 2-9, 2-21, 2-41, 2-43, 2-45, 2-47, 2-49, 2-51, 2-53, 2-55, 2-61, 2-67, 2-69, 2-75, 2-77, 2-107, 2-111, 2-127, 2-149, 3-15
Nut, Hex, M10 X 1.5 [Stover], 2-57
Nut, Hex, M10 X 1.50 [Stover], 2-57, 2-59
Nut, Hex, Sltd, .75-16, 2-73
Nut, Hex, Sltd, 1.12-18, 2-71
Nut, Hex, Sltd, M20 X 2.5, 8, 2-91, 2-93
Nut, Hex, Std, .25-20, 2-27, 2-29, 2-35
Nut, Hex, Std, .25-28, Lh, 2-75
Nut, Hex, Std, .25-28, 2-75, 2-77
Nut, Hex, Std, .31-18, 2-55, 3-55
Nut, Hex, Std, .38-16, 2-59
Nut, Hex, Std, M10 X 1.50, 2-83
Nut, Hex, Std, M12 X 1.75, Ss, 2-107, 2-111
Nut, Hex, Std, M16 X 2.0, 2-19
Nut, Hex, Std, M3 X 0.5, 8, 2-83
Nut, Hex, Std, M5 X 0.8, 8, 2-23, 2-77
Nut, Hex, Std, M6 X 1.00, 8, 3-37
Nut, Hex, Std, M8 X 1.25, Brs, 2-23
Nut, Hex, Std, M8 X 1.25, Ss, 2-77, 2-107, 2-111
Nut, Hex, Std, M8 X 1.25, 2-9, 2-55, 2-83
Nut, Hex, Stover, M8 X 1.25, 2-65
Nut, Isolator, .38-16 Wall Th .015-.437, 3-57
Nut, Low Crown, .50-20, 2-125
Nut, Manifold, Exhaust, M8 X 1.25, 5-9
Nut, Motor, Hyd, 4-5
Nut, Solenoid, 4-13, 4-17
Nut, T, M10 X 1.50 X 15.8od X 13.0l, 2-105, 2-109
Nut, T, M8 X 1.25 X 14.5od X 9.5l, 3-7
Nut, Wheel, .50-20 X 60 Angle, 2-71
Nut-Hxslot .75-16 Pltd, 4-8

O

Ohg Kit, Ci [M20 And T20], 3-55

P

Pad, Pedal, Brake, 3.96l 2.36w 0.75, 2-75
Pad, Tank, Hyd [W/Psa], 2-145, 2-147
Paint, Airdry, Blk, 12oz, 1-2
Paint, Airdry, Gray, 12oz [Enamel], 1-2
Paint, Airdry, Iron Gray,12oz[Pwdr Coat], 1-2
Paint, Airdry, Off-White, 12oz, 1-2
Paint, Airdry, Teal, 12oz, Solid, 1-2
Pan, Oil, W/ Baffle / Plug / Seal, 5-8
Panel Kit, Instmt, Repair [M20/M30], 2-13
Panel Wldt, Adj [2007], 2-9
Panel Wldt, Adj, 2-9
Panel Wldt, Filler, 2-7
Panel Wldt, Gas, Replmt [W/Fast], 2-9
Panel Wldt, Gas, Replmt, TJ (Japan only), 2-9
Panel Wldt, Gas, Replmt, TJ [W/Fast] (Japan only), 2-9
Panel Wldt, Gas, Replmt, TJ, W/Es (Japan only), 2-9
Panel Wldt, Gas, Replmt, 2-9
Panel Wldt, Gas, W/ Es, Replmt, 2-9
Panel Wldt, LPG, Replmt [W/Fast], 2-9
Panel Wldt, LPG, Replmt, TJ (Japan only), 2-9
Panel Wldt, LPG, Replmt, TJ [W/Fast] (Japan only), 2-9
Panel Wldt, LPG, Replmt, TJ, W/Es (Japan only), 2-9
Panel Wldt, LPG, Replmt, W/Es, 2-9
Panel Wldt, LPG, Replmt, 2-9
Panel Wldt, Shrd, Fan, 2-61
Panel, Access, Door, 2-9
Panel, Access, Floor, 2-9
Panel, Instmt, Rh, Gas, Replmt, 2-13
Panel, Instmt, Rh, Lpg, Replmt, Ce (Japan and CE Only), 2-13
Panel, Instmt, Rh, Lpg, Replmt, 2-13
Panel, Kit, Instmt, Replmt [M20/M30 ec-H20 only], 2-13
Pawl, Str, 2-91, 2-93
Pedal, Brake, Lock, 2-75
Pedal, Propel, 2-76
Pin Kit, Wheel, Ci [M20/T20/M30], 2-7, 3-13
Pin Wldt, Front, 2-101, 3-9
Pin Wldt, Lift (Replaced by 9003478), 2-103
Pin Wldt, Pivot, Hppr, 2-7
Pin Wldt, 3-11
Pin, 0.63d 01.8l, 1/M10h, 2cham, 2-103
Pin, 0.87d 01.8l, 1/M6 X 1.0, 1cham,Stl, 2-79
Pin, 30mmd X 215mml, 2-7, 2-85, 3-13
Pin, Arm, Safety, 2-79
Pin, Clevis, 0.25d X 0.75l, 2-75
Pin, Clevis, 0.31d X 0.75l, 3-7
Pin, Clevis, 0.31d X 1.00l, 2-75
Pin, Clevis, 0.37d X 1.31l, 3-11
Pin, Clevis, 0.37d X 1.50l, 3-11
Pin, Clevis, 0.37D X 1.75L, 2-107, 2-111
Pin, Clevis, 0.37d X 1.75l, 2-87, 2-89, 2-95, 3-11
Pin, Clevis, 0.37d X 2.00l, 2-99
Pin, Clevis, 0.50 D X 4.50l, 2-76
Pin, Clevis, 0.62d X 2.91l, 2-79
Pin, Clevis, 0.75d X 2.00l, 2-95
Pin, Clevis, 0.88d X 2.25l, 2-79
Pin, Cotter, .062 X 0.50, 2-75
Pin, Cotter, .094 X 1.00, 2-75, 2-79, 2-87, 2-89, 2-99, 3-7, 3-11
Pin, Cotter, .125 X 1.00, 2-77, 2-107, 2-111
Pin, Cotter, .125 X 1.25, 2-91, 2-93
Pin, Cotter, .125 X 2.00, 2-71
Pin, Cotter, .156 X 1.25, 2-95
Pin, Cotter, .156 X 2.00, 2-73, 2-85
Pin, Cotter, Hair, 0.31d .058 Wir, 2-15
Pin, Cotter, Hair, 0.38d .072 Wir, 2-95
Pin, Cotter, Hair, 0.62d .120 Wir, 2-79
Pin, Cotter, Hair, 1.00d .178 Wir, 2-7, 2-85, 3-13
Pin, Cotter, Hair, Dbl, 2-7, 3-13
Pin, Dowel, Pump, Hyd, 4-7
Pin, Grvd, 0.43d 01.8l [303ss], 2-101, 3-9
Pin, Hitch, .375d X 3.12l, Pl, 3-7, 3-9, 3-65
Pin, Lift, Drain, 2-121
Pin, Locating, Lpg, 2-45
Pin, Lock, Cyl Head, 14mm X 17mm, 5-3, 5-5
Pin, Lock, Transmission, 5-5
Pin, Locking, Steering, Tilt, 2-17
Pin, Retainer, 2-31
Pin, Ring, Lock, Hsng, Water Pump, 5-7
Pin, Roll, .125 D X 0.75l, .125/.129, 2-85
Pin, Roll, .187d X 1.62l, .187/.192, 2-7, 2-85, 3-13
Pin, Valve, Steering, 4-21
Piston, Pump, Hyd, Gear, 4-5
Piston, W/ Pin, Std, 5-5
Pivot Wldt, Brush, Side, 3-11
Plate Assy, Orifice, 0.0105id, Green, 4-26
Plate Kit, Repair, 2-23
Plate Wldt, Arm, Stop, 2-79
Plate Wldt, Fan, Hub [Gm 1.6l], 2-55
Plate Wldt, Hose, Vacuum, 2-125
Plate Wldt, Lift, Sqge, 2-99
Plate Wldt, Mtg, Solenoid, 2-85
Plate Wldt, Mtg, 3-37
Plate Wldt, Retainer, Sqge, 3-9
Plate Wldt, Seat, 2-15
Plate Wldt, Shakr, Side, 2-83
Plate, Backing, Brake, 2-73
Plate, Bottom, Hppr, 2-87, 2-89
Plate, Cam, 4-7
Plate, Cover, 4-7
Plate, Guard, Belt [Gm 1.6l], 2-23
Plate, Guard, Fan Shrd, Gas/Lpg, Replmt, 2-61
Plate, Handle, 2-91, 2-93
Plate, Hook, Latch, [M20], 3-63
Plate, Hsng [Fast], 3-19
Plate, Inspection, 3-37
Plate, Label, Soltn Tank (ec-H20 only), 2-114
Plate, Mtg, Latch, 2-113, 2-114
Plate, Mtg, Light, 2-13
Plate, Mtg, Prop Rod, 2-121
Plate, Mtg, Pump, 3-37, 3-61
Plate, Mtg, Relay, 2-27, 2-29, 2-35
Plate, Mtg, Seal, 2-19, 2-61
Plate, Mtg, Skirt, Scb Head, 2-97
Plate, Mtg, Vacuum Wand, 3-57
Plate, Mtg, Valve, 3-25, 3-33, 3-43
Plate, Mtg, 3-65

Plate, Orifice, 0.070id, 3-19
Plate, Orifice, 0.093id, 3-19
Plate, Pin, Clevis, Upper, 2-79
Plate, Retainer, Door, Dump, 2-87, 2-89
Plate, Ring, Starter [Gm1.6l], 2-23
Plate, Seal, Sound, 2-21
Plate, Shakr, Bar, 2-83
Plate, Shakr, 2-83
Plate, Shield, Heat, Gas/Lpg, Replmt, 2-57, 2-59
Plate, Skirt, Front, 2-97
Plate, Spacer, Motor, Hyd [En], 4-9
Plate, Sppt, Tank, 2-121
Plate, Sppt, 2-75
Plate, Stop, Brake, 2-75
Plate, Tank, Bottom, 2-121
Plate, Valve, Motor, Hyd, 4-5
Plate, Valve, Pump, Hyd, 4-7
Plate, Wear, Steering Valve, 4-21
Plug #10, 4-8
Plug #4, 4-8
Plug Assy [Cl], 4-21
Plug Kit, Drain, Recvy, Ci [M20 & T20], 2-121
Plug Orifice, Valve, Hyd, .140, 4-19
Plug Wldt, Drive, Brush, Sweep, 2-91, 2-93
Plug Wldt, Drive, Brush, 2-91, 2-93
Plug, .12npt, Ss, 2-27, 2-29, 2-31, 2-35
Plug, Bore, Valve, Relief, Oil Press, 5-7
Plug, Drain, Expandable, 4.75-6.00, 2-121
Plug, Drain, Oil Pan, M14 X 1.5 X 12, 5-8
Plug, Hole, Coolant, Eng Block, 5-5
Plug, Hole, Core, Eng Block, 5-8
Plug, Hole, Injector, 2-31, 2-35
Plug, Hole, Rnd, 0.50h .03-.12, Blk Nyl, 2-13
Plug, Hole, Rnd, 0.81h, Blk, 2-9
Plug, Hole, Rnd, 0.88h .03-.12, Blk Nyl, 2-9
Plug, Hole, Rnd, 1.00h .03-.12, Blk Nyl, 2-9
Plug, Hole, Rnd, 1.25H .03-.12, Blk Nyl, 2-15
Plug, Hole, Rnd, 2.50h .03-.25, Blk Nyl, 2-9
Plug, Hole, Rt, Rocker Switch, .87 X 1.7, 2-13
Plug, Hole, Soltn Tank, Blk Pyu, 2-113
Plug, Hose, Pyu, 2-117, 2-123
Plug, Hsng, Oil Pump, 5-7
Plug, Manifold, Intake, 2-25, 2-27, 2-29, 2-31, 2-35
Plug, Orifice, 0.060, Ss [Fast Ii+], 4-26
Plug, Orifice, Valve, Hyd, .030, 4-11, 4-19
Plug, Orifice, Valve, Hyd, .040, 4-11, 4-13, 4-15, 4-19
Plug, Orifice, Valve, Hyd, .046, 4-17, 4-19
Plug, Orifice, Valve, Hyd, .063, 4-17
Plug, Port, Sensor [Map], 2-25, 2-27, 2-29, 2-31, 2-35
Plug, Pump, Hyd, Gear, 4-5
Plug, Restrictor, 3-43
Plug, 4-5
Plunger, 3-57, 3-59
Poppet, Pump, Hyd, Gear, 4-5
Pouch, 3-39
Pulley, Tension, Belt, Timing, 5-11
Pump Assy, Column, Es (See Breakdown), 3-5
Pump Assy, Column, Es, 4-3
Pump Kit, Hyd, Rotating [Cessna], 4-7
Pump Kit, Mtg, Aux, Ci [M20 & T20], 2-143
Pump, Diaphragm, 4-23
Pump, Air, Ele, 12vdc, 3-21
Pump, Detgt, 12vdc, 3-21
Pump, Detgt, 14vdc, 150ml/Min 20psi (See Breakdown), 3-3
Pump, Detgt, 14vdc, 150ml/Min 20psi, 4-22
Pump, Diaphragm (See Breakdown), 3-61
Pump, Fuel, Hi Press [Gm 1.6l/3.0l], 2-41, 2-43
Pump, Hyd, Gear, Ext, 3, 00.97 2500, Cw, 2-143
Pump, Hyd, Piston, Var, 1.24 4000, Cw (See Breakdowns), 2-143
Pump, Hyd, Piston, Var, 1.24 4000, Cw, 4-7
Pump, Oil, 5-7
Pump, Soltn, 13.7vdc, 65psi [Fast Ii+], 3-29
Pump, Soltn, Ele, 12vdc [W/O Chk Valve], 3-19
Pump, Soltn, Ele, 13.7vdc,12/28psi, 3-37
Pump, Water [Gm], 5-7

Q

Qd36Gasket, Body, Throttle [1.6l], 2-25

R

Race Thrust, 4-8
Race, Brg, Pump, Hyd, 4-7
Radiator (Replaced by 1045316), 2-62
Radiator, W/ Hyd Cooler [Side X Side], 2-65
Radiator, 2-62
Rail, Injector, Fuel, Plstc, 2-27, 2-29
Rail, Injector, Gas, W/ Press Reg, 2-25
Receptacle, Lamp [Speaker], 2-7
Regulator [Ep], 2-37, 2-39
Relay, 12vdc, 20a, Spdt, 2-199
Relay, 12vdc, 40a, Spdt N/O, 2-69, 3-19, 3-61
Relay, 12vdc, 40a, Spdt, 2-199
Relay, 12vdc, 040a, Spdt No, 3-29, 3-37
Reservoir, Hyd, 10.0Gal, Replmt, 2-147
Resistor, Ele, Plug [430 , 2w], 3-46
Restrictor, Jet, Coolant, 2-31
Retainer, Boot, Steering Column, 2-17
Retainer, Camshaft, 5-11
Retainer, Motor, Hyd, 4-5
Retainer, Ring, Brake, 2-73
Retainer, Skirt, Front, 2-97
Retainer, Skirt, 2-97
Retainer, Sparkplug, 1 Way, 5-12
Retainer, Sparkplug, 2 Way, 5-12
Retainer, Sparkplug, 3 Way, 5-12
Retainer, Spring, 2-99
Retainer, Sqge, Side, Lh, 2-109
Retainer, Sqge, Side, Rh, 2-105
Retainer, Sqge, 3-7
Ring Kit, Piston, Std 78.95-79.02mm, 5-5
Ring, Lock, 4-7
Ring, Motor, Hyd, 4-5
Ring, Mtg, Sqge, .50l, 2-101
Ring, Retainer, Steering Valve, 4-21
Ring, Retaining, Ext, 0.38d, [E-Ring], 2-101, 2-103, 3-9
Ring, Retaining, Ext, 0.38d, [Selflock], 2-99
Ring, Retaining, Ext, 0.50d, Hd, 2-17
Ring, Retaining, Ext, 0.62d, Hd, 2-103
Ring, Retaining, Ext, 0.98d, [E-Ring], 2-75
Ring, Retaining, Ext, 1.00d, Basic, 2-91, 2-93
Ring, Retaining, Int, 2.00d, 2-79
Ring, Retaining, Pump, Hyd, 4-7
Ring, Retaining, 4-7
Rivet, Blind, .125d X 0.54 X .25d, Alm, 2-113, 2-114
Rivet, Plstc, .250d X 0.898, 2-17
Rivet, Plstc, .250d X 0.90, 3-39, 3-59
Rod Wldt, Arm, Safety, 2-79
Rod, Connecting, M08 X 45, 5-5
Rod, Hanger, Isolator, 2-59
Rod, Thrd, 2 End, .50-20 04.9l, Rh / Lh, 2-95
Rod-End, .25-28rh Fem 0.25b [Teflon], 2-77
Rod-End, .50-20lh Fem 0.50-20stud, 2-95
Rod-End, .50-20rh Fem 0.50b, 2-95
Rod-End, .50-20rh Mal 0.50b, 3-11
Rod, 2-75
Roller, Brg, 2-117, 2-123

S

Screen Wldt, Hppr, 2-81
Screen, Oil Pump, W/ Suc Pipe, 5-7
Screen, Pump, 3-5
Screen, Vacuum, 2-121
Screw, Adj, Valve, Hyd, 5-3
Screw, Btn, M8 X 1.25 X 16, Ss, 3-13
Screw, Btn, M8 X 1.25 X 20, Blk, 2-105, 2-109, 3-63
Screw, Btn, M8 X 1.25 X 25, Ss, 3-7
Screw, Cap, Motor, Hyd, 4-5
Screw, Cap, 4-7
Screw, Flt, .25-20 X 1.00, Al, 2-125
Screw, Flt, .38-16 X 0.75, Al, 2-55
Screw, Flt, .38-16 X 1.00, Al, 2-55
Screw, Flt, .38-16 X 1.50, Al, 2-125
Screw, Flt, M10 X 1.5 X 25, 10.9, 2-105, 2-109
Screw, Flt, M10 X 1.5 X 30, Ss 18-8, 2-87

Screw, Flt, M8 X 1.25 X 20, Blk, 2-105, 2-109
Screw, Flt, M8 X 1.25 X 25, 10.9, 2-87, 2-127
Screw, Flt, M8 X 1.25 X 25, 2-21
Screw, Flt, M8 X 1.25 X 30, Ss, 2-117, 2-123
Screw, Hex, .25-14 X 0.75, Fmg/Ab, Ss, 2-121
Screw, Hex, .25-20 X 0.50, 5, 2-23
Screw, Hex, .25-20 X 0.50, G5, 2-27, 2-29, 2-35
Screw, Hex, .25-20 X 0.75, G5, 2-27, 2-29, 2-35
Screw, Hex, .25-20 X 0.75, Nl, 2-127
Screw, Hex, .25-20 X 1.00, 5, 3-7, 3-9
Screw, Hex, .25-20 X 1.75, Ss, 2-77
Screw, Hex, .25-20 X 2.25, Ss, 2-77
Screw, Hex, .31-18 X 1.75, 5, 2-55
Screw, Hex, .31-18 X 4.50, 5, 2-55
Screw, Hex, .31-24 X 0.75, Nl, 2-77
Screw, Hex, .38-16 X 0.75, G5, 2-55
Screw, Hex, .38-16 X 0.75, Nl, 2-91, 2-93, 3-7, 3-9
Screw, Hex, .38-16 X 0.88, 5, 3-65
Screw, Hex, .38-16 X 1.00, 5, 2-41, 2-77
Screw, Hex, .38-16 X 1.25, 5, 2-143, 3-57
Screw, Hex, .38-16 X 1.25, Nl, 2-77
Screw, Hex, .38-16 X 1.50, Ss, 3-11
Screw, Hex, .38-16 X 2.00, Ss, 2-77
Screw, Hex, .38-16 X 3.00, 5, 2-45
Screw, Hex, .38-16 X 3.75, 5, 2-45
Screw, Hex, .50-13 X 1.25, 5, 2-23
Screw, Hex, .50-13 X 1.50, 5, 2-95
Screw, Hex, .50-13 X 3.00, Ss18-8, 2-103
Screw, Hex, .75-10 X 4.00, 5, 2-71
Screw, Hex, #10-16 X 0.62, Fmg [Ab], 3-61
Screw, Hex, #10-16 X 0.62, Fmg, [Ab], 2-19
Screw, Hex, #10-24 X 0.50, Ss, 2-55
Screw, Hex, M07-1.00 X 23.0, 8.8, 2-23
Screw, Hex, M10 X 1.5 X 16, 8.8, 2-17
Screw, Hex, M10 X 1.5 X 20, 8.8, 2-55
Screw, Hex, M10 X 1.5 X 20, Ss, 2-83, 2-87, 2-89
Screw, Hex, M10 X 1.5 X 25, 8.8, 2-7, 2-9, 2-23, 2-145
Screw, Hex, M10 X 1.5 X 25, Ss, 2-79, 2-85, 2-95, 2-107, 2-111
Screw, Hex, M10 X 1.5 X 30, 8.8, 3-55
Screw, Hex, M10 X 1.5 X 30, Ss, 2-7, 2-87, 2-89, 2-99, 3-13
Screw, Hex, M10 X 1.5 X 35, 8.8, 2-57, 2-59, 3-65
Screw, Hex, M10 X 1.5 X 40, 8.8, 2-127
Screw, Hex, M10 X 1.5 X 45, 8.8, 3-65
Screw, Hex, M10 X 1.5 X 80, 8.8, 3-65
Screw, Hex, M10 X 1.50 X 20, 8.8, 2-59
Screw, Hex, M10 X 1.50 X 25, 8.8, 2-65
Screw, Hex, M10 X 1.50 X 45, 8.8, 2-65
Screw, Hex, M10 X 1.50 X 60, 8.8, 2-83
Screw, Hex, M12 X 1.75 X 30, 8.8, 3-11
Screw, Hex, M12 X 1.75 X 30, Ss, 2-85
Screw, Hex, M12 X 1.75 X 40, 8.8, 2-73, 2-95
Screw, Hex, M12 X 1.75 X 55, Ss, 2-107, 2-111
Screw, Hex, M12 X 1.75 X 60, 8.8, 2-23
Screw, Hex, M16 X 2.0 X 90, 8.8, 2-19
Screw, Hex, M4 X 0.7 X 10, Fmg, 2-79
Screw, Hex, M4 X 0.7 X 12, 8.8, 3-21
Screw, Hex, M4 X 0.70 X 10, Fmg, Blk, 2-113, 2-114
Screw, Hex, M4 X 0.70 X 12, 8.8, 3-37
Screw, Hex, M4 X 0.70 X 50, Ss, 4-25
Screw, Hex, M5 X 0.8 X 10, Fmg, 2-95
Screw, Hex, M5 X 0.8 X 12, Ss, 3-13
Screw, Hex, M5 X 0.8 X 16, Fmg, 3-57, 3-65
Screw, Hex, M5 X 0.8 X 20, 8.8, 2-15, 2-77, 2-79
Screw, Hex, M5 X 0.80 X 12, Ss, 3-37
Screw, Hex, M5 X 0.80 X 16, Fmg, 3-59
Screw, Hex, M5 X 0.80 X 20, 8.8, 3-37
Screw, Hex, M6 X 1.0 X 12, Fmg, 2-7, 2-61, 2-145
Screw, Hex, M6 X 1.0 X 12, Ss, 3-63
Screw, Hex, M6 X 1.0 X 16, 8.8, 2-19, 2-25, 2-31, 2-61, 2-69, 2-75
Screw, Hex, M6 X 1.0 X 16, Fmg, 2-75, 2-77, 2-85, 2-97, 3-3, 3-19, 3-21
Screw, Hex, M6 X 1.0 X 16, Ss, 2-83
Screw, Hex, M6 X 1.0 X 20, 8.8, 2-15, 2-47, 2-51, 2-61
Screw, Hex, M6 X 1.0 X 20, 9.8, Sems, 2-62, 2-79
Screw, Hex, M6 X 1.0 X 20, Ss, 2-57, 2-59, 2-87, 2-89, 2-119, 2-121
Screw, Hex, M6 X 1.0 X 25, 8.8, 2-85
Screw, Hex, M6 X 1.0 X 25, Ss, 2-107, 2-111
Screw, Hex, M6 X 1.0 X 35, Ss, 2-97
Screw, Hex, M6 X 1.0 X 50, 8.8, 2-43
Screw, Hex, M6 X 1.0 X 55, Ss, 2-121
Screw, Hex, M6 X 1.0 X 60, 8.8, 2-75
Screw, Hex, M6 X 1.00 X 12, Ss, 2-114, 3-37, 3-63
Screw, Hex, M6 X 1.00 X 16, 8.8, 2-9, 2-27, 2-29, 2-35, 2-37
Screw, Hex, M6 X 1.00 X 16, Fmg, 2-65
Screw, Hex, M6 X 1.00 X 16, Ss, 3-29
Screw, Hex, M6 X 1.00 X 20, 8.8, 2-23
Screw, Hex, M6 X 1.00 X 20, 9.8, Sems, 2-17, 2-19, 2-65, 3-37
Screw, Hex, M6 X 1.00 X 20, Ss, 2-107, 2-111
Screw, Hex, M6 X 1.00 X 25, 9.8 Sems, 2-13, 2-49, 2-53, 2-65
Screw, Hex, M6 X 1.00 X 25, Ss, 2-121
Screw, Hex, M6 X 1.00 X 35, 8.8, 2-27, 2-29, 2-35
Screw, Hex, M6 X 1.00 X 35, Ss, 3-37
Screw, Hex, M8 X 1.25 X 110, Ss, 2-101, 3-15
Screw, Hex, M8 X 1.25 X 120, 8.8, Fl, 2-149
Screw, Hex, M8 X 1.25 X 130, 8.8, 2-91, 2-93
Screw, Hex, M8 X 1.25 X 16, 8.8, 2-55, 2-121, 3-11
Screw, Hex, M8 X 1.25 X 16, Ss, 2-91, 2-93, 2-117, 2-123
Screw, Hex, M8 X 1.25 X 20, 8.8, 2-9, 2-15, 2-19, 2-21, 2-41, 2-43, 2-45, 2-47, 2-51, 2-55, 2-65, 2-67, 2-71, 2-75, 2-125
Screw, Hex, M8 X 1.25 X 20, Ss, 2-9, 2-15, 2-21, 2-61, 2-67, 2-83, 2-95, 2-97, 2-107, 2-111, 2-113, 2-117, 2-121, 2-123, 2-125, 2-149, 2-151, 3-3, 3-5, 3-21, 3-29, 3-37, 3-47, 3-49, 3-51, 3-61
Screw, Hex, M8 X 1.25 X 25, 8.8, 2-7, 2-9, 2-41, 2-43, 2-45, 2-47, 2-49, 2-51, 2-53, 2-61, 2-65, 2-83, 2-117, 2-123, 2-145, 2-147
Screw, Hex, M8 X 1.25 X 25, 9.8, Sems, 2-7, 2-65, 2-69, 2-85, 2-121, 2-127
Screw, Hex, M8 X 1.25 X 25, Fmg, 2-97, 3-21, 3-25, 3-33, 3-43
Screw, Hex, M8 X 1.25 X 25, Ss, 2-67, 2-77, 2-81, 2-87, 2-89, 2-97, 2-99, 2-113, 3-7, 3-11, 3-15
Screw, Hex, M8 X 1.25 X 30, 8.8, 2-117, 2-123
Screw, Hex, M8 X 1.25 X 35, 8.8, 2-75, 2-117, 2-123
Screw, Hex, M8 X 1.25 X 35, 9.8, Sems, 2-65
Screw, Hex, M8 X 1.25 X 35, Ss, Fl, 2-99
Screw, Hex, M8 X 1.25 X 40, Ss, Nl, 2-77
Screw, Hex, M8 X 1.25 X 45, 8.8, 2-41, 2-43
Screw, Hex, M8 X 1.25 X 45, Ss, 2-57, 2-59, 2-103
Screw, Hex, M8 X 1.25 X 50, 8.8, 2-77
Screw, Hex, M8 X 1.25 X 50, Ss, Fl, 2-97
Screw, Hex, M8 X 1.25 X 60, 8.8, Fl, 2-9, 2-55
Screw, Hex, M8 X 1.25 X 60, 8.8, 2-83, 2-99
Screw, Hex, M8 X 1.25 X 60, Fl, 2-95
Screw, Hex, M8 X 1.25 X 70, 8.8, 2-75
Screw, Hex, M8 X 1.25 X 90, 8.8, 2-103
Screw, Motor, Hyd [En], 4-9
Screw, Pan, #12-16 X 0.50, F/ Plstc, 2-121, 3-66
Screw, Pan, 12-16 X 0.50, F/ Plstc (ec-H20 only), 2-114
Screw, Pan, M3 X 0.5 X 20, 4.8, 2-83
Screw, Pan, M4 X 0.7 X 10, Ss, 2-105, 2-109
Screw, Pan, M4 X 0.7 X 16, 4.8, 2-21
Screw, Pan, M4 X 0.7 X 16, Ss, 2-21, 3-3
Screw, Pan, M4 X 0.7 X 20, 4.8, 2-85
Screw, Pan, M4 X 0.7 X 20, Ss, 2-85
Screw, Pan, M4 X 0.7 X 25, 4.8, 2-15

Screw, Pan, M4 X 0.7 X 35, Ss, 2-77
Screw, Pan, M4 X 0.70 X 16, 4.8, 2-61
Screw, Pan, M5 X 0.8 X 12, Ss, 2-15, 2-21, 2-45, 2-83, 2-119, 3-19, 3-25
Screw, Pan, M5 X 0.8 X 40, 4.8, 2-25, 2-31
Screw, Pan, M5 X 0.8 X 40, Ss, 2-91, 2-93, 3-19
Screw, Pan, M5 X 0.80 X 45, 4.8, 3-61
Screw, Pan, M6 X 1.0 X 16, Ss, 2-99
Screw, Pan, M6 X 1.00 X 16, 4.8, 2-55
Screw, Pan, M8 X 1.25 X 25, Blk, 2-9, 2-13, 2-15, 2-17, 2-21
Screw, Pan, M8 X 1.25 X 25, Ss, 2-7
Screw, Pan, Phl, 12-16 X 0.50, F/ Plstc, 2-113, 2-114
Screw, Pan, Phl, M4 X 0.70 X 20, Ss, 3-37
Screw, Pan, Phl, M5 X 0.80 X 12, Ss, 3-29, 3-33, 3-43, 3-63
Screw, Pan, Phl, M5 X 0.80 X 16, Tcut,Ss, 4-25
Screw, Pan, Phl, M5 X 0.80 X 20, Ss, 3-47, 3-49, 3-51, 3-52, 3-53
Screw, Pan, Phl, M6 X 1.00 X 35, Ss, 2-5
Screw, Set, #10-24 X 0.25, Nl, 2-83
Screw, Soc, .25-20 X 0.75, Al, 2-17
Screw, Soc, .38-16 X 1.50, Al, 2-23
Screw, Soc, .50-13 X 1.50, Al, 2-71
Screw, Soc, M12 X 1.75 X 55, 10.9, 2-23
Screw, Soc, M16 X 2.0 X 50, 12.9, 2-71
Screw, Soc, M6 X 1.0 X 25, 12.9, 2-25
Screw, Soc, M6 X 1.0 X 45, 12.9, 2-25
Screw, Soc, M6 X 1.00 X 25, 12.9, 2-27, 2-29, 2-35
Screw, Soc, M6 X 1.00 X 45, 12.9, 2-27, 2-29
Screw, Soc, M8 X 1.25 X 25, 12.9, 2-107, 2-111
Screw, Soc, M8 X 1.25 X 35, 12.9, 2-107, 2-111
Screw, Soc, M8 X 1.25 X 70, 12.9, 2-35
Screw, Valve, Steering, 4-21
Screw, 2-37, 2-39, 4-8
Seal Kit, Cartridge, 2-151, 4-11, 4-13, 4-15, 4-17, 4-19
Seal Kit, Motor [Cl], 4-9
Seal Kit, Pump, Hyd, 4-7
Seal Kit, Steering [Cl], 4-21
Seal Replmt Kit, 4-8
Seal, Sponge, 0.88 1.00W 43.0L, 2-19
Seal, Afmkt, Bulb, 90, 0.50d, 02ft, 2-15
Seal, Afmkt, Bulb, 90, 0.75d F/11ga 02ft, 2-15, 2-21
Seal, Afmkt, Bulb, 90, 0.75d F/11ga 08ft, 2-9
Seal, Afmkt, Bulb, Str, 1.0d F/11ga 08ft, 2-19
Seal, Afmkt, Ure, Adh, 0.38, 0.75w 08ft (Replaced By none), 2-83
Seal, Bulb, Str, .50Hi .50W 047.2L, Adh, 2-113, 2-114
Seal, Door, Dump, Side, 2-87
Seal, Door, Dump, 2-87, 2-89
Seal, Drive, Rear, Grease Cav, 2-71
Seal, Foam, 0.50, 2-9
Seal, Oil, Cshft, 5-5
Seal, Org, .069 X 3.06id, 2-143
Seal, Org, .072 X 00.35id #04, 4-11, 4-17
Seal, Org, .078 X 00.47id #06, 4-11, 4-13, 4-17
Seal, Org, .078 X 00.47id 06, 4-15
Seal, Org, .087 X 00.64id #08, 4-17
Seal, Org, Bolt, Cover, Camshaft Hsng, 5-11
Seal, Org, Cap, Fltr, Oil, 5-8
Seal, Org, Cap, 5-3
Seal, Org, Hsng, Oil Pump, 5-7
Seal, Org, Oil Pump, 5-7
Seal, Org, Press Switch / Drain Plug, 5-7, 5-8
Seal, Org, Sensor, Temp [Epr], 2-37, 2-39
Seal, Org, Throttle Body, 2-31
Seal, Org, Water Pump, 5-7
Seal, Org, 2-31
Seal, Panl, Instmt, 2-9
Seal, Plug, Drain, Nitrile, 2-121
Seal, Radiator, Upper, 2-69
Seal, Radiator, 2-61
Seal, Rbr, Clsd, 0.13, Instmt Panl, 2-13
Seal, Ring, Pipe, Suc, Oil Pump, 5-7
Seal, Seat, Valve, 5-3
Seal, Shaft, Drain Plug, 2-121
Seal, Ure, 0.38 0.75w 13.2l Adh, 2-127
Seal, Ure, 0.38 0.75w 33.0l Adh, 2-127
Seal, Wire, 14/16ga [Wp / Mp280 Sealed], 4-23
Sealant, Tube, Ds, 5-8
Seat, Rotator, Valve, 5-3
Seat, Spring, Valve, 0.333, 5-3
Seat, Spring, Valve, 5-3
Seat, Suspension, W/1 Arm And Belt, 2-15
Seat, Valve, Exhaust, [+0.2mm], 5-3
Seat, Valve, Exhaust, [+0.4mm], 5-3
Seat, Valve, Exhaust, Std, 5-3
Seat, Valve, Intake, [+0.2mm], 5-3
Seat, Valve, Intake, [+0.4mm], 5-3
Seat, Valve, Intake, Std, 5-3
Send-Unit, Fuel [2007], 2-43
Send-Unit, Fuel, 2-41
Send-Unit, Water, Temp, 04npt 113oh/195d, 2-147
Sensor [T Map], 2-27, 2-29, 2-35
Sensor [Tmap], 2-25, 2-31
Sensor, Exhaust, Tailpipe, 2-59
Sensor, Level, Liq, 14vdc 01a .62-11, 2-114, 2-121, 3-5
Sensor, Oxygen [Gm 1.6L/3.0L 2007], 2-59
Sensor, Oxygen, 2-57
Sensor, Position, Cshft, 2-23, 5-7
Sensor, Spd / Dir, 6-30vdc, 2-77
Sensor, Temp [Epr], 2-37, 2-39
Sensor, Temp, Coolant, 2-23
Sensor, Temp, Water [Rework For 1.6GM], 2-23
Shaft Wldt, Brake, 2-75
Shaft Wldt, Pedal, Brake, 2-75
Shaft, Brush, Idler, 2-91, 2-93
Shaft, Motor, Hyd, 4-5
Shaft, Output, Motor, Hyd [En], 4-9
Shaft, Output, 4-8
Shaft, Pump, Water, 4-3
Shaft, Pump, 4-7
Shaker Wldt, 2-83
Sheave Assy Kit, Repair, 2-55
Sheave, 5.00dia [Gm1.6l 2007], 2-55
Sheave, Cshft, 5-5
Sheave, Mach [Gm1.6l], 2-55
Shield, Heat, Gas/Lpg, Replmt (Japan Only), 2-59
Shield, Heat, Gas/Lpg, Replmt, 2-59
Shield, Manifold, Exhaust, 5-9
Shield, Starter [1.6l], 2-23
Shim Kit, 4-7
Shim, Washer, 0.88d 0.51b .020, 2-125
Shim, Washer, 0.88d 0.51b .060, 2-125
Shock Absorber, 2.3 Strk, 2-77
Shoe, Brake, 180 X 30mm, 2-73
Shoe, Plstc, Sqge, 14.0, 3-57, 3-59
Shrd Wldt,Fan,G/Lp, Replmt [M20/M30/T20], 2-65
Shrd Wldt,Fan,G/Lp, Replmt [TJ] (Japan Only), 2-65
Shroud Assy, Eng, 2-21
Shroud Wldt, Fan, 16.25d [Side X Side], 2-65
Shroud, Front, Trimmed, 2-19
Shroud, Seat, 2-15
Skirt, Debris, Eng Radiator, 2-61
Skirt, Eng Fan, Gas / Lp, 2-65
Skirt, Neo, .06, 06.38w 40.86l, 06 Hole, 1-1, 2-97
Skirt, Neo, .06, 06.85w 27.95l, 08 Hole, 1-1, 2-105, 2-109
Skirt, Neo, .06, 07.63w 51.52l, 11 Hole, 2-97
Skirt, Neo, .06, 12.00w 45.88l, 07 Hole, 1-1, 2-97
Skirt, Neo, .06, 26.99w 40.55l, 36 Hole, 2-97
Skirt, Neo, .12, 05.39w 14.01l, 02 Sl, 2-97
Skirt, Neo, .18, 10.37w 27.95l, 12 H&S, 1-1, 2-105, 2-109
Skirt, Rbr, .37, 04.50w 40.94l, 06 Hole, 1-1, 2-97
Sleeve, 0.31b 0.50d 0.3l, Ss, 2-107, 2-111, 2-121
Sleeve, 0.49b 0.68d 1.2l [304ss], 2-107, 2-111
Sleeve, Dashpo, Pump, Hyd, Gear, 4-5
Sleeve, Nyl, #37 05.0l, 2-71
Sleeve, P/M, 0.31b 0.50d 0.3l [430ss], 2-117, 2-123
Sleeve, P/M, 0.31b 0.50d 0.7l [430ss], 2-101, 2-117, 2-123
Sleeve, P/M, 0.31b 0.50d 0.9l [430ss], 2-57, 2-59, 2-91, 2-93
Sleeve, P/M, 0.34b 0.63d 0.6l, Bnz, 2-103
Sleeve, P/M, 0.34b 0.63d 1.2l, Bnz, 2-101
Sleeve, P/M, 0.37b 0.50d 0.6l [430ss], 3-11

Sleeve, P/M, 0.43b 1.00d 1.0l, Stl, 2-41
Sleeve, P/M, 0.47b 0.75d 0.5l [430ss], 2-95
Sleeve, Pump, Water, 4-3
Sleeve, Rbr, 3.50b 3.58d 1.8l, 3-5
Sleeve, Throttle, Plstc [Bosch], 2-31
Solenoid, #10, 12vdc, 4-13, 4-15, 4-17, 4-19
Solenoid, #8, 12vdc, 4-11, 4-13, 4-15, 4-17, 4-19
Solenoid, 12v, Valve, Hyd [Cec], 4-10
Solenoid, Pull, 12vdc, Damper, 2-85
Spacer Plate, 4-8
Spacer, 41.0mmb X 85.0mmd X 18ga, 2-23
Spacer, Coil, #8, 4-11, 4-19
Spacer, Fan, Taper [2007], 2-55
Spacer, Fan, 2-55
Spacer, Hub, Keyed, 3-7, 3-9
Spacer, Pad, Rbr, 2-99
Spacer, Plstc, Ny, 2-15
Spacer, Sppt, Fltr Lock Off, 2-31
Spacer, Sqge, Side Brush, Rbr, 3-9
Spacer, Strap, Adj, Alternator, 2-55
Spacer, Valve, Steering, 4-21
Spacer, 3-7, 3-9
Sparkplug [Gm], 1-1
Sparkplug [Gm, 1pick=1plug], 1-1
Sparkplug, 5-12
Spool, Pilot, Dual, Hyd, 4-19
Spool, Pilot, Hyd, 4-11, 4-13, 4-15, 4-17, 4-19
Spring Kit, Scu [Cl], 4-21
Spring, 3/4 X 16 [Gm1.6L 2010 Lpg], 2-39
Spring, Cmpr, 0.9od .042wir 02.0l, 2-101
Spring, Cmpr, 18.8d, 1.6w, 57.1l, 2-17
Spring, Dsl, 1.00od 0.50id 1.7l, 2-103
Spring, Extn, 0.75od X 0.09wir, 2.5l, 2-107, 2-111
Spring, Extn, 0.75od X 0.12wir, 4.3l, 2-77
Spring, Extn, 0.88od X 0.14wir, 9.0l, 2-99
Spring, Extn, 1.68od X .203wir, 7.5l, 2-95
Spring, Flat, Retainer, Angled Screen, 2-81
Spring, Flat, Retainer, Screen, 2-81
Spring, Flt, 0.08th, 4.50w X 07.0l, 2-99
Spring, Keeper, 2-103
Spring, Motor, Hyd, 4-5
Spring, Tors, 0.75id .06wir 02.8coil, 2-75
Spring, Tors, 1.13id .12wir 02.3coil Rh, 2-75
Spring, Valve, Relief, Oil Press, 5-7
Spring, Valve, 5-3
Spring, Wir, 0.08d, Brake, Parking, 2-75
Spring, Wir, 0.16d, Brush Retaining, 2-5
Spring, Wir, 0.25d, Return, Brake, 2-73
Spring, 4-5
Sprocket, Camshaft, 5-11
Sprocket, Crankshaft, 5-11
Squeegee Assy, Sba, Linatex, 1-2, 3-7
Squeegee Assy, Sba, Ure, 1-2, 3-7
Squeegee Kit, Rear, Replmt [M20/T20], 2-101
Squeegee Wldt, Rear, 2-101
Starter, 12vdc [Delco] (Mar. 2006 and Newer), 5-5
Starter, 12vdc [Gm] (Before Mar. 2006), 5-5
Steer-Control, Hyd#05, 06.1 2030 (See Breakdowns), 2-17
Steer-Control, Hyd05, 06.1 2030, 4-21
Stem, Valve, Hyd [4w2p], 4-15, 4-19
Stem, Valve, Hyd, 4w2p, 4-11, 4-13, 4-17
Stem, Valve, Hyd, 4-13, 4-15, 4-17, 4-19
Stop, Rotation, 2-103
Strainer, Hyd, 25gpm 100mesh Psi, 2-147
Strainer, Hyd, 025gpm 100mesh 03psi, 1-1
Strainer, Hyd, 25 Gpm 100 Mesh, 1-1
Strainer, Soltn, 20 Mesh, Cyl 3.5d 9.5l, 3-5
Strap, Adj, Alternator, 2-55
Strap, Door, Dump, Side, 2-87
Strap, Door, Dump, 2-87, 2-89
Strap, Mtg, Motor, .124.00W, 2-83
Strap, Mtg, Tank, Lpg, Hinge, 2-45
Strap, Mtg, Tank, Lpg, 2-45
Strap, Pyp, 0.07 1.0w 18.5l, W/ Buckle, 3-57
Strap, Rbr, Tie-Down, 2/Hooks 19.0l, 2-69
Strap, Retaining, Hose, 2-117, 2-123
Strap, Sppt, 2-77
Strap, Static, Afmkt, 2-97
Strap, Tank, Gas, 2-41, 2-43
Strip Mtg, Seal, 2-19
Strip, Flap, Recirculation, 2-97
Strip, Non-Slip, 0.50w 06.0l, 2-101
Strip, Rbr, 0.06 01.00W 04.0L, 2-83
Strip, Rbr, 0.06 03.54w 03.5l [Neo/60], 3-37
Strip, Rbr, 0.06 04.00w 05.0l Neo/60, 2-83
Stud, .31-18 2.75l M8 X 1.25, Ss, 2-101
Stud, Ball, .39d .31-16, Gasspring, 2-15
Stud, M05-0.8 [Gm1.6L Lp 2010], 2-35
Stud, M10 X 1.50 [35], 2-55, 2-57, 2-59
Stud, Manifold, M8 X 28, 5-9
Stud, Manifold, M8 X 96, 5-9
Stud, Starter, M08 X 1.25, 5-5
Stud, Wheel, .50-20 X 1.50l, 0.370th, 2-71
Switch Assy, Press, 3.0, 19.5l Tube, 3-5
Switch Kit, Pump, Repair,, 4-23
Switch, Ignition [Ku], 2-13
Switch, Indicator, Oil Press [2010], 2-23, 5-7
Switch, Indicator, Oil Press, 2-23, 5-7
Switch, Press, 0006psi Dpdt, 2-23
Switch, Press, 10psi, Spst, 3-19
Switch, Press, 12vdc 08a Spst Nc 0070psi, 2-45
Switch, Press, 50 Psi, Pm02, 3-39
Switch, Press, Adj [4-16 In Wtr], 2-85
Switch, Press, Spdt 0008psi, 2-85
Switch, Rocker, Dpdt Mom/Off/Mom, 2-13
Switch, Rocker, Dpdt On/None/On, 3-61
Switch, Rocker, Dpdt On/Off/On, 2-13
Switch, Rocker, Spst, Mom, 3-37
Switch, Snap, 15a No, Rlr, 2-79
Switch, Temp [160F], 2-83
Switch, Thermal, 160Deg, Spdt (Replaced by 9003444), 2-83

T

Tank Kit, Soltn, W/ Bracket, Replmt, 2-113
Tank, Coolant, 03.30w 4.7hi 04.7l,1liter, 2-67
Tank, Coolant, 03.6w 04.1hi 05.5l,1liter, 2-67
Tank, Coolant, 04.7 03.3 4.7deep, 1liter, 2-61
Tank, Detgt, Trimmed, 3-5
Tank, Fuel, 11.26Gal, gas, Replmt, 2-41
Tank, Fuel, 11.2gal, Gas, Replmt [2007], 2-43
Tank, Lpg, 33lb, W/ Gauge [Empty, Liq], 2-45
Tank, Recvy, Trimmed, 2-121
Tank, Soltn, W/ Label [M20], 2-113
Terminal, Bullet, Mal, .157d, 12ga, 3-49, 3-51, 3-52, 3-53
Terminal, Fem, Mp280, Sealed, 18-16ga, 4-23
Thermostat, W/ Hsng And Seal, 5-3
Thrust Bearing, 4-8
Tie, Cable, 6.0l, 1.25d Max, 3-52, 3-53
Tie, Cable, 11.3l, 2.75d Max, 3-19
Tie, Cable, Nyl, 07.3l .19w 1.8 Max D, 2-13, 2-25, 2-27, 2-65, 2-71, 2-93, 3-19, 3-52, 3-53
Tie, Cable, Nyl, 11.0L, .14W, 3.0 Max. D, 3-39
Tie, Cable, Nyl, 14.5l .30w 4.0 Max D, 4-25
Tie, Cable, Nyl, 15.3l . W 4.5 Max D, 3-19, 3-25, 3-33
Tie, Cable, Nyl, 15.3L . W 4.5 Max D, 2-83
Tire Assy, Solid, 18.0x6.0 4.5bc/5bolt, 1-2
Tire, Drive, Scrbr, Non-Skid, 18.0X6.0, 2-71
Tire, Drive, Scrbr, Pu, Grey, 18.0X6.0 (Optional Polyurethane), 2-71
Tire, Idler, Scrbr, Blk, 16.0X3.5, 2-73
Tire, Idler, Scrbr, Pu, Grey, 16.0X3.5 (Optional Polyurethane), 2-73
Tower, Wldt, Lift, Lh, Replmt [M20], 2-7
Tower, Wldt, Lift, Rh, Replmt [M20], 2-7
Tray Wldt, Fuel, 2-41, 2-43
Tray Wldt, Lpg, 2-45
Tray Wldt, Perma-filter (Replaced By none), 2-83
Tray, Perma-Filter, 2-83
Tread, Non-Skid, 01.9w 08.0l, 2-7
Tread, Non-Skid, 02.2w 11.5l, 3-13
Tread, Non-Skid, 03.0w 11.6l, 2-7, 2-9, 2-76
Tube [Pcv], 5-3
Tube Assy, Plug, Drain, 2-121
Tube Kit, Hyd, Case Drain [M20/T20], 2-93

Tube Kit, Tank, Recvy, Replmt, 2-123
Tube Kit, Tank, Soltn, Replmt, 2-117
Tube Wldt, Arm, Safety, 2-79
Tube Wldt, Exhaust, 1.6d, 2 Flng, 2-59
Tube Wldt, Exhaust, Gas/Lpg, 2-57
Tube Wldt, Leg, Ohg, Lh, Pntd, 3-55
Tube Wldt, Leg, Ohg, Rh, Pntd, 3-55
Tube Wldt, Plug, Drain, 2-121
Tube Wldt, Tee, 2-47, 2-49, 2-51, 2-53
Tube Wldt, Torque, 2-95
Tube, 0.50d 0.32b 00.4l, Ss, 2-117, 2-123
Tube, 00.38d 00.26b 00.3l Stl Plt, 2-77
Tube, 00.50d 00.38b 00.6l Stl, 2-77
Tube, 2.90id 3.00od 02.4l, Ss, 2-117, 2-123
Tube, Acrylic, Hose, Pinch, 2-123
Tube, Air Bleed, .62d 2.2l .12npt Alm, 2-25, 2-32
Tube, Bleed, Air, .62od 2.2l .12npt, Alm, 2-27, 2-37
Tube, Coolant, 1.3d, Lower, 2-67
Tube, Coolant, Lower, 1.3d, 2-61
Tube, Distribution, Water, 2-119
Tube, Ds, 5-8
Tube, Exhaust, 1.5d, 2-57
Tube, Exhaust, Flng, 1.5d [M20/T20 2007], 2-59
Tube, Hyd, 08 Jf08/Jf08, 3-15
Tube, Hyd, 08 Jf08/Jm08, 2-91
Tube, Hyd, Brush Return, W/ Cd [M20/T20], 2-93
Tube, Hyd, Main Return, 2-145
Tube, Hyd, Rear Sqge [M20], 2-145
Tube, Hyd, Sqge, 2-145
Tube, Hyd, Swp, 2-149
Tube, Pvc, Clr, 4.0l [Shc80], 3-23, 3-25
Tube, Rnd, 1.75d 0.77b 01.1l, Stl, Pntd, 2-71
Tube, Transition, Casting, 2-127
Tube, Vacuum, 2-85
Tube, Vinyl, Pump, Water, 4-3
Tube, Wand, Vacuum, Metal [1pick=1box], 3-57
Tube, Wand, Vacuum, Metal, 3-59
Tubing Connctr.Kit, Gorman Pmp, 4-22

U

Upper Hsg Kit, Pump, Repair,, 4-23

V

Valve Assy, Relief [Cl], 4-21
Valve Assy, Water, Solenoid , 12vdc, 2-119
Valve Assy, Water, Solenoid, 12vdc, 3-13, 3-43
Valve Kit, Poppet, Gorman Rupp, 4-22
Valve Stem, N.O.Valve, Hyd, 4-10
Valve, Ball, 04pf, Chm W/ Handle, 2-41
Valve, Body, Throttle, Lpg, 2-32
Valve, By-Pass, Oil Fltr, 5-8
Valve, Check, 0002psi [Fast Ii+], 4-26
Valve, Check, 0002psi Bm04/Bm04, 3-21
Valve, Check, 0005psi [Fast Ii+], 4-26
Valve, Check, 0005psi Bm06/Bm08, 3-29
Valve, Check, 0005psi Pm04/Bm06, 3-39
Valve, Check, 2gpm .5psi Bm08/Bm08, 3-43
Valve, Check, Pump, Water, 4-3
Valve, Check, 2-31, 4-11, 4-13, 4-15, 4-17, 4-19
Valve, Cntrl, Hyd (See Breakdowns), 2-149
Valve, Cntrl, Hyd [M20 And T20] (See Breakdown), 3-15
Valve, Cntrl, Hyd [M20 And T20], 4-13
Valve, Cntrl, Hyd [M20] (See Breakdowns), 2-149
Valve, Cntrl, Hyd [M20], 4-11
Valve, Cntrl, Hyd, Solenoid, 03/16gpm, 4-15
Valve, Cntrl, Hyd, 4-17
Valve, Cntrl, Solenoid, 4-11, 4-19
Valve, Exhaust, 5-3
Valve, Fuelock, Lpg, Wire Connector, 2-31
Valve, Hyd Cartridge 10no/-0, 4-10
Valve, Hyd, Check, Jm08/Om08 5000psi, 3-15
Valve, Hyd, Relief, 4-11
Valve, Hyd, Solenoid 12vdc 3000psi (See Breakdown), 3-15
Valve, Hyd, Solenoid, 12vdc (See Breakdowns), 2-151
Valve, Hyd, Solenoid, 12vdc, 4-19
Valve, Intake, 5-3
Valve, Lock Off [Gm 1.6L 2010], 2-39
Valve, Lock Off, 2-37
Valve, Lpg, Press Relief [Rego], 2-45
Valve, Motor, Hyd, 4-5
Valve, Relief, 0600Psi, 2-151
Valve, Relief, 3000 Psi, 4-7
Valve, Relief, 4000 Psi, 4-7
Valve, Relief, Oil Press, 5-7
Valve, Relief, 4-13, 4-15, 4-17, 4-19
Valve, Shutoff, 3-61
Valve, Solenoid, 12vdc, Water Flow, 3-25, 3-33
Valve, Stem, No, 4-13, 4-15, 4-17, 4-19
Valve, Trim, Fuel, Normal Flow, 2-32
Valve, Vent, Air, Float Type, 3-39
Valve, Water, 12vdc, 6.0mm, 04pf, 3-19
Valve, Water, Solenoid, 12vdc 0.08pf, 3-3
Valve, Water, Solenoid, 12vdc 6.0mm Pf04, 3-29
Video, Oprtr, Dvd [W/Checklist M20], 3-67
Vr, Filter, Screen, 50 Mesh .59d .8l Ss, 3-19

W

Wand Kit, Vacuum, Ci [M20], 3-57, 3-59
Wand, Clean-Out, 3-61
Washer, Belleville, .31, 2-77
Washer, Flat, .78b 1.75d .18, Ss, 2-121
Washer, Flat, #06, 2-61, 2-83
Washer, Flat, #08, 2-15
Washer, Flat, #10 Ss, 2-77
Washer, Flat, #10, Ss, 2-25, 2-31, 3-3, 3-19, 3-25, 3-61, 3-65
Washer, Flat, #10, 2-15, 2-21, 2-55, 2-69, 2-79, 3-61
Washer, Flat, 0.25 Fender, 2-127
Washer, Flat, 0.25 Fendr, 2-15, 2-21
Washer, Flat, 0.25 Sae, 2-15, 2-17, 2-25, 2-31, 2-41, 2-47, 2-51, 2-57, 2-61, 2-83, 2-85
Washer, Flat, 0.25 Std, 2-23, 2-61, 2-69, 2-75, 2-77, 3-19, 3-21
Washer, Flat, 0.25, Fendr, 2-62, 2-65
Washer, Flat, 0.25, Sae, 2-27, 2-29, 2-35, 2-43, 2-59, 2-65, 3-37
Washer, Flat, 0.25, Ss, 2-83, 2-87, 2-89, 2-97, 2-119, 2-121, 3-63
Washer, Flat, 0.25, Std, 2-9, 2-23, 2-27, 2-29, 2-35, 2-37, 2-65
Washer, Flat, 0.27B 0.69D .05, Ss, 3-29
Washer, Flat, 0.27b 0.69d .05, Ss, 2-5, 2-114, 3-37, 3-63
Washer, Flat, 0.31 Sae, 2-9, 2-15, 2-21, 2-55, 2-71, 2-77, 2-107, 2-111, 2-113, 2-117, 2-123
Washer, Flat, 0.31 Std, 2-77, 2-147
Washer, Flat, 0.31, Hardened, 2-55
Washer, Flat, 0.31, Sae, 2-55
Washer, Flat, 0.31, Ss, 2-57, 2-61, 2-83, 2-87, 2-89, 2-97, 2-99, 2-101, 2-103, 2-107, 2-111, 2-117, 2-123, 3-3, 3-7, 3-11
Washer, Flat, 0.31, Std, 2-7, 2-9, 2-15, 2-17, 2-19, 2-41, 2-43, 2-45, 2-47, 2-49, 2-51, 2-53, 2-55, 2-59, 2-61, 2-65, 2-67, 2-71, 2-75, 2-91, 2-93, 2-95, 2-97, 2-117, 2-121, 2-123, 2-145, 2-149, 3-11, 3-13, 3-15, 3-55, 3-63
Washer, Flat, 0.32b 1.00d .12, Ss, 2-9, 2-15, 2-21, 2-81, 2-87, 2-89, 2-113, 2-117, 2-121, 2-123, 2-125, 2-149, 2-151, 3-5, 3-21, 3-29, 3-37, 3-47, 3-49, 3-51, 3-61
Washer, Flat, 0.34b 0.75d .12 [Viton], 3-19
Washer, Flat, 0.38 Sae, 2-23, 2-55, 2-77, 2-95, 2-103, 2-127, 2-143
Washer, Flat, 0.38 Std, 2-7, 2-15, 2-41, 2-45, 2-77, 2-85, 2-145, 3-7, 3-9, 3-55, 3-57, 3-65
Washer, Flat, 0.38, Hardened, 2-23, 2-37, 2-39
Washer, Flat, 0.38, Sae, 2-55, 2-59
Washer, Flat, 0.38, Std, 2-59, 2-65
Washer, Flat, 0.38b 0.88d .08, Ss, 2-59, 2-67
Washer, Flat, 0.38b 1.25d .12, Neo, 2-81, 2-87, 2-89
Washer, Flat, 0.40b 1.12d .12, Ss, 2-127
Washer, Flat, 0.40b 1.12d .12, Ss, 2-55, 2-61, 2-65, 2-83, 2-87, 2-89, 2-103, 2-125, 3-55

Washer, Flat, 0.41b 1.25d .12, Pye, 2-15
Washer, Flat, 0.44b 1.00d .08, Ss, 2-7, 2-79, 2-99, 3-13
Washer, Flat, 0.50 Sae, 2-17, 2-23, 2-61, 2-73, 3-11
Washer, Flat, 0.50 Std, 2-23
Washer, Flat, 0.50, Sae, 2-85
Washer, Flat, 0.50, Std, 2-23
Washer, Flat, 0.53b 1.88d .12, Stl, Pl, 2-9, 2-23, 2-99, 2-101
Washer, Flat, 0.56b 1.38d .11, Ss, 2-95, 2-99, 2-107, 2-111
Washer, Flat, 0.62 Sae, 2-19
Washer, Flat, 0.66b 1.00d .12, Rbr, 3-3, 3-61
Washer, Flat, 0.69b 1.19d .06, Stl, Pl, 2-103
Washer, Flat, 0.75 Sae, 2-71
Washer, Flat, 0.76b 1.50d .06, Ss, 2-73
Washer, Flat, 0.79b 1.18d .06, Nyl, 2-117, 2-123
Washer, Flat, 0.81b 1.06d .06, Stl, 2-61, 2-65
Washer, Flat, 06, 3-59
Washer, Flat, 08, Ss, 4-25
Washer, Flat, 08, 3-37
Washer, Flat, 1.15b 1.75d .08, Stl, 2-13
Washer, Flat, 1.26B 1.88D .13, Stl, Pl, 2-7, 2-85
Washer, Flat, 1.26b 1.88d .13, Stl, 3-13
Washer, Flat, 1.39b 2.12d .13, Stl, 2-71
Washer, Flat, 10, Ss, 3-29, 3-33, 3-37, 3-43
Washer, Flat, 10, 3-37, 3-47, 3-49, 3-51, 3-52, 3-53
Washer, Flat, 2.16b 3.50d .16, Felt, 2-71
Washer, Flat, Belleville, .25, 2-107, 2-111
Washer, Flat, Belleville, .31, 2-55, 2-117, 2-123, 2-125, 3-11
Washer, Flat, Belleville, .38, 2-59, 2-77, 2-99, 2-107, 2-111
Washer, Flat, Belleville, .50, 2-107, 2-111
Washer, Flat, Belleville, M10, 2-81
Washer, Flat, M21.0b X 37d X 3, 2-73
Washer, Flat, Pump, Hyd, 4-7
Washer, Lock, Int, #06, 2-83
Washer, Lock, Int, #08, Ss, 2-85
Washer, Lock, Int, #10, Ss, 3-19
Washer, Lock, Int, 0.25, 3-37
Washer, Lock, Int, 0.38, 2-55
Washer, Lock, Int, 08, Ss, 4-25
Washer, Lock, Int-Ext, 0.31, 2-97
Washer, Lock, Int-Ext, 0.38, 2-55
Washer, Lock, Int-Ext, 10, 2-21
Washer, Pump, Hyd [En], 4-7
Washer, Rbr, 4-3
Washer, Sealing, 0.28b 0.75d Ss, Neo, 2-121
Washer, Sheave, Cshft, 5-5
Washer, Shld, Nyl [8-32], 2-13
Washer, Sprkt, Camshaft, 5-11
Washer, Thrust, 0.34b 1.50d .06, 2-117, 2-123
Washer, Thrust, 0.61b 1.25d .06, Fgl, 2-103, 2-105, 2-107, 2-109, 2-111, 3-7
Washer, Thrust, 1.00b 1.75d 0.13w, Fbr, 3-11
Weight, Eccentric, 2-83
Wheel, 06.0D 2.00W 1.19B, Gray Rbr, 2-7, 3-13
Wheel, 06.0d 2.00w 1.19b, Gray Rbr, 2-85
Wheel, 3.0d 1.38w 0.50b, 1-1, 2-103
Wheel, 4.0d 0.89w 0.64b, 2-101
Wheel, Steering, 14.3d 0.81b 36tooth, 2-17
Wire Set, Sparkplug [1.6l], 5-12
Wire, 16ga 09.6l Brown Mp280/ #10ring, 2-23
Wire, Ground, 2-55

We Need Your Help...

As part of Tennant's Zero Defects Program, we want to know about errors you have found or suggestions you may have regarding our machine manuals. If you find an error or have a suggestion, please complete this postage-paid form and mail it to us. Thank you for helping us make zero defects a way of life at Tennant.

Manual No. _____ Rev. No._____ Publish Date _____ Page _____

Machine _____ ❑ Report Error ❑ Suggestion

_____

_____

_____

_____

_____

_____

_____

_____

_____

_____

_____

_____

_____

Name _____ Date _____

Customer Number _____

Company _____

Address _____

City/State/Zip Code _____

Fold along dotted lines

Tape here

NO POSTAGE
NECESSARY
IF MAILED
IN THE
UNITED SATES

BUSINESS REPLY MAIL

FIRST CLASS MAIL PERMIT NO. 94 MINNEAPOLIS, MN

POSTAGE WILL BE PAID BY ADDRESSEE

TENNANT COMPANY
Technical Publications #15
701 North Lilac Drive
P.O. Box 1452
Minneapolis, MN 55440-9947

We Need Your Help...

As part of Tennant's Zero Defects Program, we want to know about errors you have found or suggestions you may have regarding our machine manuals. If you find an error or have a suggestion, please complete this postage-paid form and mail it to us. Thank you for helping us make zero defects a way of life at Tennant.

Manual No. _____ Rev. No._____ Publish Date _____ Page _____

Machine _____ ❑ Report Error ❑ Suggestion

_____

_____

_____

_____

_____

_____

_____

_____

_____

_____

_____

_____

_____

Name _____ Date _____

Customer Number _____

Company _____

Address _____

City/State/Zip Code _____

Fold along dotted lines

Tape here

NO POSTAGE
NECESSARY
IF MAILED
IN THE
UNITED SATES

BUSINESS REPLY MAIL

FIRST CLASS MAIL PERMIT NO. 94 MINNEAPOLIS, MN

POSTAGE WILL BE PAID BY ADDRESSEE

TENNANT COMPANY
Technical Publications #15
701 North Lilac Drive
P.O. Box 1452
Minneapolis, MN 55440-9947